SUBJECT: **RFQ FOR DESIGN-BUILD SVCS FOR VERTICAL/ARCHITECTURAL PROJECTS**

BID # **CDB-0007-16** OPEN DATE: **10/21/2015**

COMPETITIVE SEALED PROPOSAL EVALUATION COMMITTEE

KIND AND BASIS OF CONTRACT:
CONSTRUCTION – DESIGN/BUILD

AGENCY: **DEPARTMENT OF PUBLIC WORKS**

BASIS OF AWARD: **QUALIFICATIONS BASED**

NUMBER OF BIDS INVITED: - NUMBER RECEIVED: - OTHER: -

SUMMARY OF BIDS AND RECOMMENDED ACTIONS:

The 911 Backup Call Center project was awarded to Auld & White Constructors, LLC, on 03/01/18 in the amount of $121,990.94; Change Order #1 was awarded on 08/16/18 in the amount of $3,510,800.00; Change Order #2 was awarded on 07/19/19 in the amount of $365,584.06.

Recommend approval of Change Order #3 to Auld & White Constructors, LLC, for the increase amount of $33,105.00 to convert 2 rooms into functional closets, address ITD enhancements related to convergent technologies, installation of a fire alarm communicator and busway system for the server racks. This incorporates the attached scope & fee summary "Exhibit G-4". Total revised guaranteed maximum price not-to-exceed $4,031,480.00. Total annual expenditure amount is currently at $18,000,000.00; total amount spent to date is $7,861,846.43.

Funding for this project to be executed by Amendment 5D for contract # 9182-03 and encumbered by account: FRCP32EFS-069505-PW0837-01

Attachments: Recommendation Memo, Exhibit "G-4", Previous Award(s)

BUYER Marilyn Laidler
MARILYN LAIDLER

RESPECTFULLY SUBMITTED Gary Pease
GREGORY PEASE, CHIEF
PROCUREMENT DIVISION

CONCURRENCE BY: **Robin G. Smith, P.E., Chief, Engineering and Construction Management/ Keith Powers, Interim Director, Fire and Rescue**

(ALL AWARD ACTIONS SUBJECT TO LAWFULLY APPROPRIATED FUNDS)
ACTION OF CSPEC COMMITTEE ON RECOMMENDATIONS ABOVE

MEMBERS APPROVING_____ MEMBERS DISAPPROVING_____ DATE:_____

_____ _____ OTHER_____

_____ _____

_____ _____

_____ _____

_____ _____

ACTION OF AWARDING AUTHORITY DATE _____

APPROVED_____ DISAPPROVED: _____

OTHER: _____

SIGNATURE OF AUTHENTICATION _____

City of Jacksonville, Florida

Lenny Curry, Mayor

Department of Public Works
Engineering & Construction Management Division
214 N. Hogan Street, 10th Floor
Jacksonville, FL 32202
(904) 255-8762
www.coj.net

ONE CITY. ONE JACKSONVILLE.

August 15, 2019

TO: Gregory W. Pease
Chief of Procurement

THRU: John P. Pappas, P.E.
Director

FROM: Robin G. Smith, PE
Chief, Engineering & Construction Management

Keith Powers
Interim Director of Fire and Rescue

SUBJECT: CDB-0007-16 – Design-Build Services –Vertical/Architectural Projects – 911 Backup Call Center AMENDMENT 5D

In accordance with Design/Build CDB-0007-16, Contract 9182-03, the subject project was awarded by Amendment 5A in the amount of $121,990.94 to provide 60% design. Amendment 5B in the amount of $3,510,800.00 provided final design and construction for the 911 Backup Call Center. Amendment 5C in the net amount of $365,584.06 was to authorize the direct purchase of furniture for the building, address grounding requirements, ITD enhancements and the installation of the furniture. Amendment 5D is to covert 2 rooms into functional closets, address ITD enhancements related to convergent technologies, installation of a fire alarm communicator and busway system for the server racks. Negotiations have resulted in the GMP amount of $33,105.00, as indicated on the attached Scope & Fee Summary Exhibit G-4. JSEB goals of 10% continue to be met.

Accordingly, this is to recommend that Contract #9182-03, Amendment 5A, originally executed March 21, 2018, between the City and Auld & White Constructors, LLC. for the 911 Backup Call Center be amended to incorporate the Attached Scope and Fee Summary, Exhibit G-4 to increase the GMP amount by $33,105.00 to a new GMP amount of $4,031,480.00, known as Amendment 5D.

Total funding for this project should be encumbered by contract as follows:

ACCOUNT NO.	ENCUMBERED AMOUNT
See attached	$33,105.00
TOTAL	$33,105.00

RGS/lw

Attachment: Exhibit G-4

9b

ATTACHMENT "A"
ACCOUNT NUMBERS
911 BACK UP CALL CENTER

ACCOUNT NO.	FRCP32EFS-069505-PW0837-01	SHPS171SS91-06424	FRCP32EFS-069801-PW0837-01	Contract Totals
CT NO.	CTSH18000013-01	MATERIALS DO NOT ENCUMBER	MATERIALS- DO NOT ENCUMBER	
Amendment 5A	$121,990.94			$121,990.94
Amendment 5B	$3,510,800.00			$3,510,800.00
Amendment 5C	$365,584.06			$365,584.06
Amendment 5D	$33,105.00			$33,105.00
Account Totals	$4,031,480.00	$0.00	$0.00	$4,031,480.00
DIRECT MATERIALS ADJUSTMENT		$255,000.00	$258,596.20	$513,596.20

EXHIBIT G-4

NBR	MASTER ITEM DESCRIPTION	QUANTITY	UOM	UNIT COST	NET ADDITION	NET DELETION	NET TOTALS
	ADDITIONAL SCOPE						
1	911 CALL CENTER CLOSETS	1.00	LS	$6,892.00	$6,892.00		
	JUSTIFICATION: PCO 7 - Includes the conversion of two rooms to functional closets. Includes carpet flooring, wood doors, and fire suppression. Location of closets are between Entrances 109E/ 109D and Corridor Lockers.						
2	CONVERGENT TECHNOLOGIES	1.00	LS	$3,882.00	$3,882.00		
	JUSTIFICATION: PCO 8 - Adds project enhancements to meet ITD requirements to accommodate the Convergint Technologies scope Work associated with PCO 8 includes electrical rough-in's for security items and fire alarm						
1	Fire Alarm Communicator	1.00	LS	$3,092.00	$3,092.00		
	JUSTIFICATION: PCO 9 includes installation of the Fire Alarm Telguard Dialer System, a fire alarm communicator system. PCO 9 also includes monitoring services for one (1) year at the 911 Back Up Call Center. One year monitoring period began on July 5, 2019						
2	Busway Systems for Server Racks	1.00	LS	$19,239.00	$19,239.00		
	JUSTIFICATION: PCO #11 Adds busway equipment for the Server Racks to meet ITD request. Additional equipment includes, six plugin units with two cords, four APC racks, ATS. PCO #11 includes installation of four COJ provided clocks in the Call Center. PCO #11 also includes a 4" sleeve installed between Storage Room 105 and Server Room 104. Bus bars ETA is the week of September 16th. Circuit Breaker and ATS ETA is November.						
	ADDITIONAL SCOPE SUBTOTAL				$33,105.00	$0.00	
	ADDITIONAL SCOPE NET TOTAL						**$33,105.00**
NET TOTAL CHANGE ORDER NO. 2F							**$33,105.00**

EXHIBIT G-4

5/21/2019

Re: 911 Back-Up Call Center
AWC Project Number: 1609-

Mr. Daryl Weinstein
City of Jacksonville
214 North Hogan Street, 10th Floor
Jacksonville, FL 32202

Dear Mr. Weinstein:

Please accept this letter as our Proposed Change Order No. 7 for the following additional work:

Furnish all labor, material and equipment necessary to properly complete the Drywall Assemblies, Door Hardware and 3'-0"x 7'-0" Wood Doors for the two (2) added Call Center Closets. Shelving, Wall Base, Carpet, Light Fixtures and Power Outlets have been excluded from the Proposal.

Notes:
1. The estimated time P.C.O. No. 7 as indicated above will add to the original construction duration is zero (0) days.
2. AWC reserves the right to request additional time and money due to the cumulative effect of all pending changes.
3. This P.C.O. must be approved no later than Wednesday, May 29, 2019 to minimize any future delays to the project.

TOTAL AMOUNT OF THIS PROPOSED CHANGE NO. 7.....$6,892.00

Please indicate your approval and Owner's acceptance by signing in the space provided below and return one (1) copy for our files. Upon acceptance of same, we will prepare a Change Order for execution.

Sincerely,

James Durkin

James Durkin
Project Manager

c:

Attachments

ACCEPTED:

City of Jacksonville

BY: _____

EXHIBIT G-4

Change Order Request

Auld & White Constructors, LLC
4168 Southpoint Parkway, Suite 101
Jacksonville, FL 32216
Phone: 904-296-2555

Owner : City of Jacksonville
Ed Ball Bldg
Jacksonville, FL 32202

Project: 1609- 911 Back-Up Call Center
5847 Aviation Avenue
Jacksonville, FL 32221

Change Order Request # : 7 - Closets in Call Center [109]

Phase	Description	Cost Type	Est Units	Est HRs	UM	Est Unit Cost		Estimated Cost
08110.	FRAMES, DOORS & HARDWARE - MATER	2 SUB	0 00	0 00	LS	0 00	S	3,261.00
09150.	DRYWALL, FRAMING & ACOUSTICAL CEII	2 SUB	0 00	0 00	LS	0 00	S	2,937 00

Bond	0 90%	61.00
Builders Risk	0 58%	36.00
General Liability Insurance	1 08%	67.00
Labor Burden	53 00%	0 00
Misc Tools & Equipment	12 00%	0 00
Overhead and Profit	7 50%	477 00
Pollution Insurance	0.32%	21 00
Printing Costs	0 50%	32 00
Sales Tax	7.00%	0.00
	Total For Change Order	**$6,892.00**

Approved By: City of Jacksonville

Signed: _____

Date: _____

Submitted By: Auld & White Constructors LLC

Signed: _____

Date: _____

EXHIBIT G-4

AULD & WHITE
CONSTRUCTORS • LLC

4168 Southpoint Parkway Suite 101
Jacksonville, Florida 32216
904-296-2555
FAX 904-296-6990

DATE	May 21, 2019
P.C.O.	No. 7
PROJECT	911 Back-Up Call Center
AWC PROJECT	No. 1609

Two (2) Call Center Closets

Drywall Assemblies

Materials:
Drywall, Metal Framing and Fasteners - $470
Painting Materials - $160

Labor:
CARPENTERS – Drywall & Painting
2 Carpenters X 24 Hours X $40 Per Hour = $1,920

CLEAN-UP – General
1 Employee X 4 Hours X $30 Per Hour = $120

Subtotal: $2,670
Overhead & Profit (10%): $267
Drywall Assemblies Total: $2,937

AULD & WHITE CONSTRUCTORS, LLC

James T. Durkin

James T. Durkin, Project Manager

EXHIBIT 6

RAY WARE HARDWARE, INC.

4048 HERSCHEL STREET
JACKSONVILLE, FL 32205-9299
904-389-6659

ESTABLISHED 1939

QUOTE

Number	040904
Date	04/23/2019
Page	1

Ship-to: SAME
911 BACKUP CALL CENTER
AULD & WHITE CONSTRUCTORS LLC
4168 SOUTHPOINT PARKWAY
SUITE 101
JACKSONVILLE , FL 32216

Bill-to: 1623-169
911 BACKUP CALL CENTER
AULD & WHITE CONSTRUCTORS LLC
4168 SOUTHPOINT PARKWAY
SUITE 101
JACKSONVILLE , FL 32216

Reference #	Slsp	Terms	Whse	Freight	Ship Via
CHANGE ORDER #2	JD	NET 30 DAYS	01	PRE/ADD	OT

Quoted By: JD Quoted To: Effective: NONE Expires: 04/22/2020

Item	Description	Ordered	UM	Price	UM	Extension
HM FRAMES	LUMP SUM PRICING 2EA 3070 5 7/8" KD FRAME	1	EA	420.00	EA	420.00
WOOD DOORS	LUMP SUM PRICING 2EA 3070 FLUSH PLAIN SLICED WHITE BIRCH WOOD DOORS WITH CUSTOM PREFINISH	1	EA	1170.00	EA	1170.00
HARDWARE	LUMP SUM PRICING 6EA MCKINNEY HINGES 2EA YALE MORTISE LOCKS 2EA YALE CLOSERS 2EA ROCKWOOD WALL STOPS 6EA HAGER SILENCERS	1	EA	1065.00	EA	1065.00
INSTALLATION	INSTALLATION DOORS & HARDWARE ONLY	1	EA	420.00	EA	420.00

Merchandise	Misc	Tax	Freight	Total
3075.00	.00	185.85	.00	3260.85

ACCEPTED BY: _____

Customer Copy

... Last Page

EXHIBIT G-4

Dominic Ciacelli

From: Weinstein, Daryl <DWeinstein@coj.net>
Sent: Friday, April 12, 2019 8:54 AM
To: James Durkin; Dominic Ciacelli
Cc: Kenny Geisendorff
Subject: 911 Backup Call Center

Follow Up Flag: Follow up
Flag Status: Completed

James,

I spoke to Larry about those closets and JFRD wants them even though they will have to have sprinklers. Please price it up.

Thank you.

Daryl Weinstein
Construction Project Manager
City of Jacksonville | Engineering and Construction Management Division
214 N. Hogan Street, 10th Floor
Jacksonville, FL 32202
Office: 904-255-8925
Cell: 904-588-6020

EXHIBIT G-4

CONSTRUCTION UNDERWRITERS, INC.
4168 Southpoint Pkwy Ste 305 Jacksonville, FL 32216
(904) 296-3331 Phone (904) 296-1314 Fax

March 26, 2019

Mr. Jason Skyles
Auld & White Constructors, Inc.
4168 Southpoint Parkway, Suite 100
Jacksonville, FL 32216

RE:Insurance Rates – Project #1600 – Fire station No. 73 Cecil Field
– Project #1609 – 911 Back-up Call Center

Dear Jason,

Based on the project values of $3,463,264 for Project #1600 and $3,632,791 for Project #1609 and other project information that you provided to us, your estimated average rates for insurance coverages are as follows:

General Liability	1.08% of Contract Value
Contractor's Pollution Liability	0.32% of Contract Value
Builders' Risk Insurance	0.58% of Contract Value

Please let us know if you need anything further.

Sincerely,

Mark C. Fore

EXHIBIT G-4

Dominic Ciacelli

From: James Durkin <jdurkin@auld-white.com>
Sent: Wednesday, May 29, 2019 12:36 PM
To: Dominic Ciacelli
Cc: Weinstein, Daryl; Kenny Geisendorff
Subject: RE: FS73/ 911 Call Center PCO's
Attachments: PCO 7 Detail.pdf

Dominic,

The software system we utilize generates the values listed below from the cost of work added in a Change Order. These percentages are established at the start of the project based off of current company rates and contract requirements. We discussed this in previous emails/meetings. The values do round up to the nearest dollar.

I have provided 1609 BCC - PCO 7 Call Center Closets for example:

The Cost of Work is $6,198 ($3,261 + $2,937).

Builders Risk 0.58% x Cost of Work = $36
GLI 1.08% x Cost of Work = $67
Pollution Insurance 0.3234% x Cost of Work = $21
Printing Costs 0.50% x Cost of Work = $32
Sub Total: $6,354

Overhead & Profit 7.5% x Sub Total = $477
Net Total: $6,831

Bond 0.90% x Net Total = $61
Change Order Amount: $6,892

Thanks,
James

James Durkin | Project Manager
Auld & White Constructors, LLC | BUILD WITH US
p. 904 296 2555

From: Dominic Ciacelli <dciacelli@via-cs.com>
Sent: Wednesday, May 29, 2019 11:41 AM
To: James Durkin <jdurkin@auld-white.com>
Cc: Weinstein, Daryl <DWeinstein@coj.net>; Kenny Geisendorff <KGeisendorff@via-cs.com>
Subject: RE: FS73/ 911 Call Center PCO's

James,
Any update on the item requested below?
Thanks,

Dominic Ciacelli, E.I.

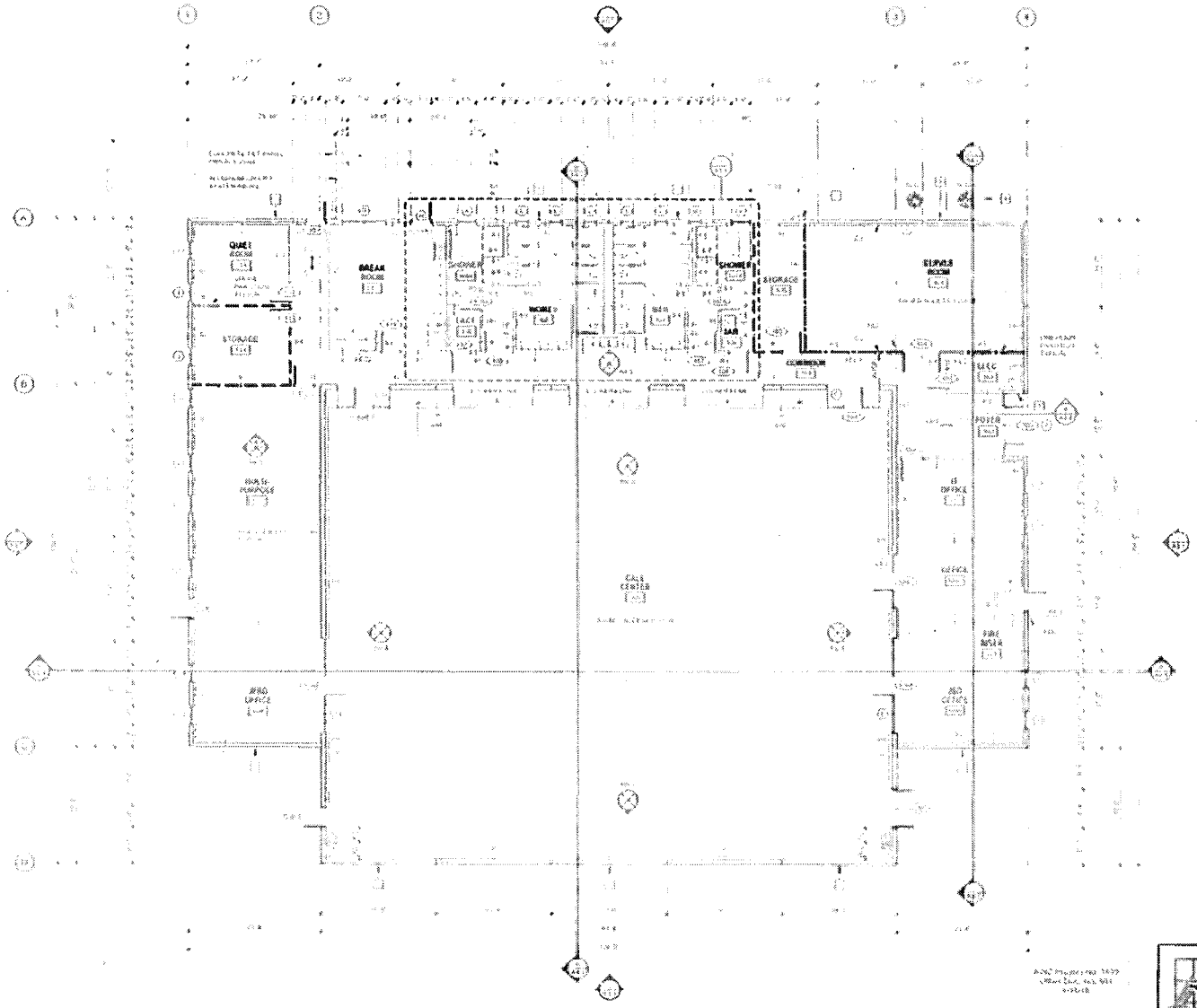

FLOOR PLAN

SCALE: 1/8" = 1'-0"

FLOOR PLAN GENERAL NOTES

A. ALL DIMENSIONS ARE MEASURED TO FACE OF METAL STUD OR MASONRY UNLESS NOTED OTHERWISE.

B. DO NOT SCALE DRAWINGS. NOTIFY ARCHITECT FOR ANY MISSING DIMENSIONS

C. REFER TO SHEET G0.3 FOR DEFINITION OF ABBREVIATIONS

D. PROVIDE VERTICAL GYPSUM WALLBOARD CONTROL JOINTS IN CORRIDOR 100, SERVER ROOM 101, CALL CENTER 106 AND MULTI PURPOSE 112. REFER TO INTERIOR ELEVATION SHEETS A6.3 A6.4 & A6.5 FOR THE LOCATIONS IN CORRIDOR 100, CALL CENTER 106 AND MULTI PURPOSE 112. REFER TO THIS SHEET FOR THE LOCATIONS IN SERVER ROOM 101

E. REFER TO LIFE SAFETY FLOOR PLAN SHEET LS2.1 FOR LOCATION OF ALL FIRE/SMOKE RATED PARTITIONS

F. SEE DETAIL 6/A12.1 FOR TYPICAL FIRE EXTINGUISHER CABINET DETAIL

G. SEE DETAIL 8/A12.1 FOR TYPICAL WALL MOUNTED FIRE EXTINGUISHER

H. SEE SHEET A4.5 FOR PARTITION SCHEDULE

I. SEE DETAIL 1/A4.3 FOR STOREFRONT ELEVATION TYPES

FLOOR PLAN KEY NOTES

1. METAL DOWNSPOUT - CONNECT TO UNDERGROUND STORM DRAINAGE PIPING. SEE CIVIL DRAWINGS FOR CONTINUATION
2. METAL PARAPET LADDER WITH WALK-THRU PLATFORM
3. PROVIDE RAPID ENTRY KEY BOX EQUAL TO KNOX BOX SERIES 3200. COORDINATE MOUNTING HEIGHT WITH FIRE MARSHAL
4. AIR COOLED CONDENSER. TYPICAL. SEE MECHANICAL DRAWINGS

BUILD & WHITE CONSTRUCTORS • LLC

ENB ARCHITECTS

SCOTT A. BRADY

FL REG. ARCH 13016

CITY OF JACKSONVILLE, FLORIDA
DEPARTMENT OF PUBLIC WORKS

911 BACKUP CALL CENTER
440 AVIATION AVENUE JACKSONVILLE, FL 32211
FLOOR PLAN

A2.1

EXHIBIT G-4

5/21/2019

Re: 911 Back-Up Call Center
AWC Project Number: 1609-

Mr. Daryl Weinstein
City of Jacksonville
214 North Hogan Street, 10th Floor
Jacksonville, FL 32202

Dear Mr. Weinstein:

Please accept this letter as our Proposed Change Order No. 8 for the following additional work:

Furnish all labor, material and equipment necessary to properly complete the Electrical Rough-In and Fire Alarm requirements in full accordance with the Convergint Technologies email dated April 22, 2019. Door Hardware and Security Components is excluded and provided by COJ/Convergint Technologies.

Notes:
1. The estimated time P.C.O. No. 8 as indicated above will add to the original construction duration is zero (0) days.
2. AWC reserves the right to request additional time and money due to the cumulative effect of all pending changes.
3. This P.C.O. must be approved no later than Wednesday, May 29, 2019 to minimize any future delays to the project.

TOTAL AMOUNT OF THIS PROPOSED CHANGE NO. 8.....**$3,882.00**

Please indicate your approval and Owner's acceptance by signing in the space provided below and return one (1) copy for our files. Upon acceptance of same, we will prepare a Change Order for execution.

Sincerely,

James Durkin

James Durkin
Project Manager

c:

Attachments

ACCEPTED:

City of Jacksonville

BY: _____

EXHIBIT G-4

Change Order Request

Auld & White Constructors, LLC
4168 Southpoint Parkway, Suite 101
Jacksonville, FL 32216
Phone: 904-296-2555

Owner : City of Jacksonville
Ed Ball Bldg
Jacksonville, FL 32202

Project: 1609- 911 Back-Up Call Center
5847 Aviation Avenue
Jacksonville, FL 32221

Change Order Request # : 8 - Convergint Rough-In Requirements

Phase	Description	Cost Type	Est Units	Est HRs	UM	Est Unit Cost	Estimated Cost
16011	ELECTRICAL SUBCONTRACT	2 SUB	0.00	0.00	LS	0.00 $	3,492.00

Bond	0.90%	35.00
Builders Risk	0.58%	20.00
General Liability Insurance	1.08%	38.00
Labor Burden	53.00%	0.00
Misc Tools & Equipment	12.00%	0.00
Overhead and Profit	7.50%	268.00
Pollution Insurance	0.32%	11.00
Printing Costs	0.50%	18.00
Sales Tax	7.00%	0.00
	Total For Change Order	**$3,882.00**

Approved By: City of Jacksonville

Signed: _____

Date: _____

Submitted By: Auld & White Constructors, LLC

Signed: _____

Date: _____

EXHIBIT G-4

May 14, 2019

James Durkin
Auld & White Constructors
4168 Southpoint Parkway, Suite 101
Jacksonville, FL 32216

RE: 911 Backup Call Center

Mr. Durkin,

We have prepared a cost breakdown for additional work on the above referenced project. Per your contract, this work will not proceed until a written change is received by our office. The scope, material, labor, and profit are broken down for your use and review. Please contact me if you believe we have misinterpreted the scope of work. The breakdown is as follows:

Scope of Work: Provide additional conduit, boxes, and labor to install security items.

Item	Amount
Material	$678.42
Labor	$2,496.00
Profit	$317.44

Total Change Amount	$3,491.86

Thank you for the opportunity to provide additional work for this project. We look forward to successfully completing the project with you.

Sincerely,

Keith Alligood, President

EXHIBIT G-4

James Durkin

From: Jeremy Fox <jeremy.fox@convergint.com>
Sent: Monday, April 22, 2019 6:28 AM
To: Dominic Ciacelli; James Durkin; Rocco Stefanell
Cc: Jansen, Pieter; Weinstein, Daryl; Kenny Geisendorff; Barengo, Scott
Subject: RE: 911 Back Up Call Center: Convergint Technologies Scope

Dominic
One thing I noticed was that...
Convergint Technologies installing a fire alarm dry contact relay, must be within 2' of the Convergint equipment in Room 103/ Electrical Room. – We will not be installing the fire alarm dry contact relay. This will have to be supplied and installed by the fire alarm system contractor. We will need it tied to our maglock power supply for release upon fire alarm.

Please let me know if you have any questions or concerns.

Thank you
Jeremy

Jeremy Fox | Project Manager | Convergint Technologies
O: 904-379-8472 M: 904-383-9229 E: jeremy.fox@convergint.com
6950 Philips Highway, Jacksonville Fl. 32216

From: Dominic Ciacelli <dciacelli@via-cs.com>
Sent: Thursday, April 18, 2019 4:15 PM
To: Jeremy Fox <jeremy.fox@convergint.com>; James Durkin <jdurkin@auld-white.com>; Rocco Stefanell <rstefanell@auld-white.com>
Cc: Jansen, Pieter <PJansen@coj.net>; Weinstein, Daryl <DWeinstein@coj.net>; Kenny Geisendorff <KGeisendorff@via-cs.com>; Barengo, Scott <SBarengo@coj.net>
Subject: 911 Back Up Call Center: Convergint Technologies Scope

[EXTERNAL]

All.

To summarize today's conversation regarding the Convergint Technologies work:

PCO No. 2 for the 911 Back Up Call Center replaced the conduit for the security cameras with J-Hooks, AWC responsible for the camera cabling.

AWC will put together pricing to add 3 boxes for the emergency exit pushbuttons (Main Entrance Interior, Server Room Interior, Breakroom Interior).
AWC to confirm with ENB the emergency exit pushbuttons must be at ADA height.

Convergint Technologies will install a pedestal at the main entrance that will house a Card Reader, Intercom and ADA Push Button. AWC to price and install a 1.5" conduit to accommodate all 3 items, 0.75" conduit is currently called for in the drawings.

Convergint Technologies installing a fire alarm dry contact relay, must be within 2' of the Convergint equipment in Room 103/ Electrical Room. AWC to price and install junction box and 0.5" conduit for this item.

Intercom and reader will require a rough in box/ conduit on exterior of break room and exterior of server room. Jeremy Fox with Convergint Technologies to provide marked up plans showing locations of conduit and boxes needed. Attached email contains information and cut sheets for Convergint Technologies equipment, including wall space needed in Electrical Room.

Let me know if there is anything I may have missed or if there are any questions.

Thanks,

Dominic Ciacelli, E.I.
Asst. Project Administrator
VIA Consulting Services, Inc. (DBE)
10250 Normandy Blvd., Suite 304
Jacksonville, Florida 32221
(904)783-9842 (Office)
(407)687-7080 (mobile)

EXHIBIT G-4

AULD & WHITE
CONSTRUCTORS · LLC

7/10/2019

Re: 911 Back-Up Call Center
AWC Project Number: 1609-

Mr. Daryl Weinstein
City of Jacksonville
214 North Hogan Street, 10th Floor
Jacksonville, FL 32202

Dear Mr. Weinstein:

Please accept this letter as our Proposed Change Order No. 9 for the following additional work:

Furnish all labor, material and equipment necessary to properly complete the installation of the Fire Alarm Telguard Dialer System with Fire Alarm Monitoring covered for one (1) year from July 5, 2019.

Notes:
1. AWC reserves the right to request additional time and money due to the cumulative effect of all pending changes.
2. This P.C.O. must be approved no later than Wednesday, July 10, 2019 to minimize any future delays to the project.

TOTAL AMOUNT OF THIS PROPOSED CHANGE NO. 9.....**$3,092.00**

Please indicate your approval and Owner's acceptance by signing in the space provided below and return one (1) copy for our files. Upon acceptance of same, we will prepare a Change Order for execution.

Sincerely,

James Durkin

James Durkin
Project Manager

c:

Attachments

ACCEPTED:

City of Jacksonville

BY: _____

DATE: _____

EXHIBIT G-4

Change Order Request

Auld & White Constructors, LLC
4168 Southpoint Parkway, Suite 101
Jacksonville, FL 32216
Phone 904-296-2555

Owner : City of Jacksonville
Ed Ball Bldg
Jacksonville, FL 32202

Project: 1609- 911 Back-Up Call Center
5847 Aviation Avenue
Jacksonville, FL 32221

Change Order Request # : 9 - Fire Alarm Communicator

Phase	Description	Cost Type	Est Units	Est HRs	UM	Est Unit Cost	Estimated Cost
16011	ELECTRICAL SUBCONTRACT	2 SUB	0.00	0.00	LS	0.00 $	2,781.00

Bond	0.90%	28.00
Builders Risk	0.58%	16.00
General Liability Insurance	1.08%	30.00
Labor Burden	53.00%	0.00
Misc Tools & Equipment	12.00%	0.00
Overhead and Profit	7.50%	214.00
Pollution Insurance	0.32%	9.00
Printing Costs	0.50%	14.00
Sales Tax	7.00%	0.00
	Total For Change Order	**$3,092.00**

Approved By: City of Jacksonville

Signed: _____

Date: _____

Submitted By: Auld & White Constructors, LLC

Signed: _____

Date: _____

EXHIBIT G-4

June 19, 2019

James Durkin
Auld & White Constructors, LLC
4168 Southpoint Parkway, Suite 101
Jacksonville, FL 32216

RE: 911 Call Center Fire Alarm Dialer

Mr. Durkin.

We have prepared a cost breakdown for additional work on the above referenced project. Per your contract, this work will not proceed until a written change is received by our office. The scope, material, labor, and profit are broken down for your use and review. Please contact me if you believe we have misinterpreted the scope of work. The breakdown is as follows:

Scope of Work:
Provide and install Telguard Dialer with batteries and monitoring for one year.

Item	Amount
Material	$2,398.00
Labor	$130.00
OH & Profit	$252.80
Total	**$2,780.80**

Thank you for the opportunity to provide additional work for this project. We look forward to successfully completing the project with you.

Sincerely,

Keith Alligood, President

AULD & WHITE
CONSTRUCTORS · LLC

EXHIBIT G-4

7/31/2019

Re: 911 Back-Up Call Center
AWC Project Number: 1609-

Mr. Daryl Weinstein
City of Jacksonville
214 North Hogan Street, 10th Floor
Jacksonville, FL 32202

Dear Mr. Weinstein:

Please accept this letter as our Proposed Change Order No. 11 for the following additional work:

Furnish all labor, material and equipment necessary to properly complete the installation of the Busway Equipment (Plugins, APC Racks, ATS installed by Others) for the Server Racks per COJ request in AWC issued Other Document No. 15. Proposal includes the installation of the four (4) COJ provided clocks in the Call Center and 4" sleeve installed between Storage and Server Rooms.

Notes:
1. AWC reserves the right to request additional time and money due to the cumulative effect of all pending changes.
2. This P.C.O. must be approved no later than Wednesday, July 31, 2019 to minimize any future delays to the project.

TOTAL AMOUNT OF THIS PROPOSED CHANGE NO. 11.....$19,239.00

Please indicate your approval and Owner's acceptance by signing in the space provided below and return one (1) copy for our files. Upon acceptance of same, we will prepare a Change Order for execution.

Sincerely,

James Durkin

James Durkin
Project Manager

c:

Attachments

ACCEPTED:

City of Jacksonville

BY: _____

DATE: _____

EXHIBIT G-4

Change Order Request

Auld & White Constructors, LLC
4168 Southpoint Parkway, Suite 101
Jacksonville, FL 32216
Phone 904-296-2555

Owner : City of Jacksonville
Ed Ball Bldg
Jacksonville, FL 32202

Project: 1609- 911 Back-Up Call Center
5847 Aviation Avenue
Jacksonville, FL 32221

Change Order Request # : 11 - Busway Server Equipment & Clock Install

Phase	Description	Cost Type	Est Units	Est HRs	UM	Est Unit Cost	Estimated Cost
01110	CONSTRUCTION PHASE FEE	1 MAT	0.00	0.00	LS	0.00 $	3,875.00
16011	ELECTRICAL SUBCONTRACT	2 SUB	0.00	0.00	LS	0.00 $	13,431.00

Bond	0.90%	171.00
Builders Risk	0.58%	101.00
General Liability Insurance	1.08%	187.00
Labor Burden	53.00%	0.00
Misc Tools & Equipment	12.00%	0.00
Overhead and Profit	7.50%	1,330.00
Pollution Insurance	0.32%	56.00
Printing Costs	0.50%	88.00
Sales Tax	0.00%	0.00
	Total For Change Order	**$19,239.00**

Approved By: City of Jacksonville

Signed: _____

Date: _____

Submitted By: Auld & White Constructors, LLC

Signed: _____

Date: _____

EXHIBIT G-4

AULD & WHITE
CONSTRUCTORS • LLC

4168 Southpoint Parkway Suite 101
Jacksonville, Florida 32216
904-296-2555
FAX 904-296-6990

DATE	July 26, 2019
P.C.O.	No. 11
PROJECT	911 Back-Up Call Center
AWC PROJECT	No. 1609

Construction Phase Fee

Additional Project Time
Five (5) Working Days x $775 Per Day = $3,875

Breakdown:
Project Management - $164 Per Day
Superintendent – $529 Per Day
Telephone – $15 Per Day
Trucks – $45 Per Day
Fuel – $22 Per Day

CONSTRUCTION PHASE FEE TOTAL: $3,875

AULD & WHITE CONSTRUCTORS, LLC

James T. Durkin

James T. Durkin, Project Manager

EXHIBIT G-4

July 19, 2019

James Durkin
Auld & White Constructors
4168 Southpoint Parkway, Suite 101
Jacksonville, FL 32216

RE: 911 Backup Call Center

Mr. Durkin,

We have prepared a cost breakdown for additional work on the above referenced project. Per your contract, this work will not proceed until a written change is received by our office. The scope, material, labor, and profit are broken down for your use and review. Please contact me if you believe we have misinterpreted the scope of work. The breakdown is as follows:

Scope of Work:
Additional Equipment in Communication room consisting of six plugin units with two cords, and 4 APC rack ATS. We will install the plugin units but the ATS will be installed by others. We will also provide installation of four clocks provided by COJ. Material provided by COJ shall be all back boxes, equipment, programmers, and trims. We will provide conduit, CAT 6e cable and installation. One 4" sleeve will also be provided between the data center and the storage room.

Item	Amount
Material	$10,260.00
Labor	$1,950.00
Profit	$1,221.00

Total Change Amount	$13,431.00

Thank you for the opportunity to provide additional work for this project. We look forward to successfully completing the project with you.

Sincerely,

Keith Alligood, President

EXHIBIT G-4

JAX 911 Backup Call Center, 2-Post Racks		
Details		
Item Number	**Item Description**	**Quantity**
Starline Bus bar		
US100T3C4S-1000C-WHITE	Starline BUSWAY, 100A, T3, 4 POLE, HOUSING GRND, 10 FT., WHITE	2
UF100T3C4S-SNSN-0100C-WHTO	Starline END FEED, 100A, T3, 4 POLE, HOUSING GRND, 2 FT., WHITE	1
UF100T3C4R-SNSN-0100C-WHTO	Starline END FEED, 100A, T3, 4 POLE, HOUSING GRND, 2 FT., REV, WHT	1
SJK100T3-WHT	Starline JOINT KIT, 100A, T3, WHITE	2
SECT3-WHT	Starline END CAP, T3, WHITE	2
UBRH-1	Starline HANGER, T3 - 3/8" THREADED ROD ADAPTER	6
SCST3-1	Starline CLOSURE STRIP, T3, PVC, WHITE, 10 FT SECTION	2
ST3IT	Starline INSTALLATION TOOL, T3	1
Starline Circuit Breaker with 2 L620 Cords each		
CBMDC100AE92-X-(2)L620C-4-WH	Starline CKT BKR DROPCORD PLUGIN UNIT, T3, (2) L620C CONN, 100AIC, CORD=10FT, WHITE	6
APC by Schneider ATS Rack mount (2) L620 cords for A-B power		
AP4430	APC Rack ATS, 200/208V, 20A, L6-20 in, (8) C13 (3) C19 out	4

07/09/19
Other Doc. No. 15
AWC Project No. 1609

EXHIBIT G-4

primex
Simply Synchronized

Levo Series

Digital Clocks

Easily viewed from up to 150 feet away, our Levo Series clocks improve the accuracy and efficiency of your entire organization. Digital Clocks arrive preconfigured to be able to access your existing IT network via Ethernet to quickly synchonize to the exact second and communicate with the intuitive OneVue software. When the clocks are delivered, just plug them in and hang them on the wall to keep your organization running on time, even through power outages and Daylight Saving Time shifts.

Designed for Visibility and Reliability

Sleek, low-profile digital clocks feature bright LED digits to keep your facility in sync and running on time. The OneVue Web-based interface makes it easy for users to schedule clock status reports to learn if synchronization is off or maintenance is required

Product Features:

- Highly visible 7-segment LED digits
- Three display dimmer options: 75%, 50% and 25%
- Power outage memory backup for up to 1 hour
- Choose Red or Green LED digits

DIGITAL CLOCKS

ONEVUE SURFACE-MOUNT MODELS WITH 2.5" DIGITS

4-Digit	6-Digit	Description
C2005X200	C2005X202	4" Slope Bracket, PoE
C2005X212	C2005X419	10" Slope Bracket, PoE

ONEVUE SURFACE-MOUNT MODELS WITH 4" DIGITS

4-Digit	6-Digit	Description
C2005X201	C2005X203	4" Slope Bracket, PoE

ONEVUE FLUSH-MOUNT MODELS WITH 2.5" DIGITS

6-Digit	Description
C2005X202F	PoE

- Add a "G" after the item number for green LED models
  Example: C2005X201G or C2005X202FG

Surface Mount

Flush-Mount
Includes clock, junction box and face plate

DUAL CLOCK BRACKET KIT

Any two surface-mount digital clocks can be mounted back-to-back to provide greater visibility in hallways and larger areas. Select the correct Dual Clock Bracket Kit for your application below

DUAL CLOCK BRACKET KIT

Mount	2", 4-Digit	2", 6-Digit	4", 4-Digit	4", 6-Digit*
Ceiling	24CBRK	26CBRK	4XBRK	4XBRK
Wall	24WBRK	26WBRK	4XBRK	N/A

- 4" 6 digit Clock can be ceiling mount only

Dual Mount - Ceiling

Dual Mount - Wall

07/09/19
Other Doc. No. 15
AWC Project No. 1609

EXHIBIT G-4

DIGITAL CLOCK SPECIFICATIONS

- 12- or 24-hour time display
- PM indicator light
- Automatically adjust for Daylight Saving Time
- Alternating time and date display option
- LED dimmer option (75%, 50%, 25%)
- Power outage memory backup for up to 1 hour
- Operating temperature range: 32°- 95°F (0°- 35°C)
- Storage temperature range: -20°-185°F (-29°- 85°C)
- Clock configuration to access your network is accomplished online prior to delivery for plug-and-play convenience.
- Clock Power: PoE 802.3 at/af compatible
- Network connectivity via RJ45 (Ethernet)
- Certification: FCC/IC/CE marked
- Peak power consumption: 12.9 watts (class 3)

SINGLE CLOCK DIMENSIONS

Clock Type	Weight	Height	Width	Depth
		A	B	C
2.5" (6.4cm), 4-digit	1.8 lbs. (0.8 kg)	5.0" (12.7cm)	10.8" (27.4cm)	2.8" (5.6cm)
4" (10.16cm), 4-digit	3.9 lbs. (1.8 kg)	8.0" (20.3cm)	17.9" (45.5cm)	2.4" (6.1cm)
2.5" (6.4cm), 6-digit	2.0 lbs. (0.9 kg)	5.0" (12.7cm)	13.8" (34.9cm)	2.2" (5.6cm)
4" (10.16cm), 6-digit	4.6 lbs. (2.1 kg)	8.0" (20.3cm)	23.3" (59.2cm)	2.4" (6.1cm)

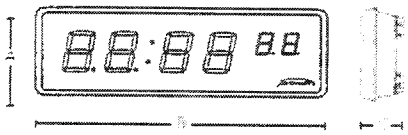

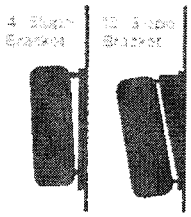

DUAL-MOUNT DIMENSIONS

Clock Type	Width from Wall	Height from Ceiling	Depth of Two Clocks
	A	B	C
Dual 2.5" (6.4cm), 4-digit	13.8" (35.1cm)	8.0" (20.3cm)	5.9" (15.0cm)
Dual 4" (10.16cm), 4-digit	20.9" (53.1cm)	11.0" (27.9cm)	6.3" (16.0cm)
Dual 2.5" (6.4cm), 6-digit	16.8" (42.7cm)	8.0" (20.3cm)	5.9" (15.0cm)
Dual 4" (10.16cm), 6-digit	NA*	11.0" (27.9cm)	6.3" (16.0cm)

* 4", 6-digit clocks cannot be dual mounted to the wall

Note: Dual mount clocks shipped disassembled to simplify installation

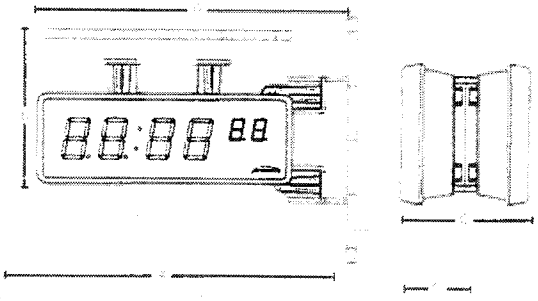

FLUSH-MOUNT DIMENSIONS

Clock Type	Weight	Width	Height	Depth
		A	B	C
2.5" (6.4cm) 6-digit	2.0 lbs. (0.9 kg)	16.8" (42.7cm)	6.5" (16.5cm)	3.4" (8.6cm)

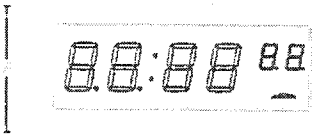

When ordering for new construction projects, the junction boxes for flush-mount installation may be ordered to ship in advance of clocks. Please request special shipping and provide dates when ordering.

07/09/19
Other Doc. No. 15
AWC Project No. 1609

To Learn More:
Call: 800.537.0464
Email: info@primex-inc.com

primexinc.com

OneVue

OneVue is a trademark of Primex. The innovative technology software solution for facility and time synchronization monitoring and reporting. All other trademarks are the property of their respective owners.

© 2012 Primex. The Primex logo is a registered trademark of Primex.
All Rights Reserved. 4/11

EXHIBIT G-4

Primex Wireless dba Primex, Inc.
965 S. Wells St., Lake Geneva, WI 53147
T: (262) 729-4858 F: Fax: (262) 248-0061
www.primexinc.com info@primexinc.com

Simply Synchronized

QUOTATION

Company:	City of Jacksonville - Duval County Courthouse	Quote #:	City of Jacksonville - Duval County Courthouse-Q-43932
Attention:	Pieter Jansen	Date:	March 5, 2019
Address:	214 North Hogan street Jacksonville, FL 32202 United States	End User:	City of Jacksonville - Duval County Courthouse
		Address:	214 North Hogan street Jacksonville, FL 32202 United States
Printed by:	Vanessa Tyska, Account Executive	Submitted by:	Vanessa Tyska

QTY:	PART NO:	DESCRIPTION:	COST:	TOTAL:
4	4XBRK	4" Digital Dual Clock 4x4 Wall/Ceiling or 4x6 Ceiling Mounting Bracket	USD 50.00	USD 200.00
4	C2005X203G	OneVue Levo 4", 6-Digit, Green LED, POE	USD 479.00	USD 1,916.00

SUBTOTAL:	USD 2,116.00
SHIPPING & HANDLING:	USD 36.16
TAX:	
TOTAL QUOTATION:	USD 2,152.16
Ship Via:	FT1 US Ground

NOTES:

PURCHASE ORDER INFORMATION (submit POs to po@primexinc.com)

Does your company/organization require the issuance of a purchase order before making payments to Primex Wireless for the products and services listed on this Quotation? (Note that the terms and conditions of your Purchase order will not apply unless Primex Wireless signs the purchase order.)

☐ YES ☐ NO

If yes, please complete the following or submit your PO to po@primexinc.com

PO NUMBER: _____ PO AMOUNT: _____

LEAD TIMES
Below is the current lead time for products on this quotation and will be improved when possible. Lead time dates start after receipt of all necessary items to process a purchase order, including but not limited to, credit acceptance, configuration information, customer release and paperwork requirements. Please call 1-262-729-4858 if you have any questions regarding lead times provided or for specific delivery date requirements

10 Days

07/09/19
Other Doc. No. 15
AWC Project No. 1609

TAX EXEMPT INFORMATION

EXHIBIT G-4

OneVue

PoE Digital Clock/Timer Install Guide - Levo Series

OneVue PoE Managed Time

primex

07/09/19
Other Doc. No. 15
AWC Project No. 1609

Legal Notice

Copyright ©2018 Primex. All rights reserved.

Printed in the USA.

Information in this document is subject to change without notice. The software described in this document is furnished under a license agreement or nondisclosure agreement. The software may be used or copied only in accordance with the terms of those agreements. No part of this publication may be reproduced, stored in a retrieval system, or transmitted in any form or by any means, electronic, mechanical or otherwise, for any purpose, without the prior written permission of Primex.

About Primex

Primex is a leading provider of solutions that automate and maintain facility compliance, increase efficiencies, enhance safety and reduce risk for enterprise organizations in the healthcare, retail pharmacy, education, manufacturing and business vertical markets.

The solutions delivered by Primex include Environmental Monitoring, Managed Time and School Bell Scheduling.

Worldwide Headquarters

965 Wells Street, Lake Geneva, WI 53147

Phone: 1-262-729-4853 | email info@primexinc.com | www.primexinc.com

About this Guide

Audience

This guide is intended for users tasked with installing Levo Series Digital Clocks/Timers for use with the Primex OneVue Managed Time solution.

Content messaging

This guide includes notes, cautions, and warnings content that highlights important messages.

Typeface	Indicates
Note	Indicates something important or useful.
Caution	Indicates a command or procedure may have an unwanted or undesirable result.
Warning	Indicates a command or procedure that could be dangerous to system or device.
Example	Provides an example of the topic.

07/09/19
Other Doc. No. 15
AWC Project No. 1609

CONTENTS

Specifications - Levo Series 8
Component Specifications 9
Digital code blue and elapsed timer operation 10
Manual Check-In 11
Install Levo Series Digital Clock/Timer 12
Installation Requirements - Levo Series 13
Power & Dimension Specifications 14
Tilt Bracket Dimensions 17
Tilt Bracket Mount 18
Wall Mount Install 19
Dual Clock Bracket Kit Assembly & Mounting 20
Flush Mount Install 23
Timer Control Switch Install 26
Remove from Tilt Bracket 29
Remove from Dual Mount Bracket 29
One-Year Limited Warranty 30
Technical Support 31

07/09/19
Other Doc. No. 15
AWC Project No. 1609

EXHIBIT G-4

Important Safety Instructions

READ ALL INSTRUCTIONS BEFORE INSTALLATION, OPERATION, OR MAINTENANCE OF PRODUCT.

Some of the following information may not apply to your particular product model; however, as with any electronic product, precautions should be observed during installation, operation, and maintenance.

- Installation must conform to state or local building codes and ordinances.
- Installation or maintenance should be performed only by qualified personnel as defined in the Local Electrical Code.
- Mount in location where device will not readily be subject to tampering.
- Any wiring instructions must be followed precisely. Failure to do so could cause permanent equipment damage.
- To avoid possible electric shock or damage to the device, disconnect power source before installation or servicing.
- Do not install or use device near water. To reduce the risk of electrical shock, do not expose device to rain or moisture. Device must not be exposed to dripping or splashing and no objects filled with liquids, such as vases, must be placed on the device.
- Device is designed for indoor use only. Operating outdoors, or in wet areas, is an electrical hazard and may damage the equipment while nullifying the warranty.
- Device is cleanable with a cloth moistened with water or a common disinfectant. Be sure to test any cleaning solutions on a small area of the clock before using it on the entire device. Do not use caustic cleaners or abrasives.
- Keep away from dust, dirt and moisture.
- For healthcare facilities, devices are not intended for patient use and must not be installed within 6 feet (2 m) of patient contact.

AC-Power Models

- AC main power supply must be disconnected while installing or performing maintenance of any device. To completely disconnect the power input, the main plug should be disconnected from the main socket outlet completely.
- The main socket outlet must provide a protective earthing connection where the outlet has a protective earth (ground) connection.
- Main plug is used as disconnect device and it should remain readily operable during intended use.
- If power cable is connected directly to junction box without an outlet, AC power must be supplied from a circuit that has a resettable circuit breaker. AC mains power supply must be disconnected while installing or performing maintenance of any device. Open the circuit breaker supplying the device before attempting installation, maintenance, or repairs.

07/09/19
Other Doc. No. 15
AWC Project No. 1609

Regulatory Approvals

FCC Compliance

Pursuant to FCC 15.21 of the FCC rules, changes not expressly approved by Primex might cause harmful interference and void the FCC authorization to operate this product.

FCC Radio Frequency Interference

This equipment complies with FCC RF radiation exposure limits set forth for an uncontrolled environment. This equipment should be installed and operated with a minimum distance of 20 centimeters between the radiator and your body.

The device complies with Part 15 of the FCC Rules. Operation is subject to the following two conditions.

(1) This device may not cause harmful interference, and

(2) This device must accept any interference received, including interference that may cause undesired operation.

This transmitter must not be co-located or operating in conjunction with any other antenna or transmitter.

The antennas used for this transmitter must be installed to provide a separation distance of at least 20 cm from all persons and not be co-located or operating in conjunction with any other antenna or transmitter.

FCC warning

Any Changes or modifications not expressly approved by the party responsible for compliance could void the user's authority to operate the equipment

Note: This equipment has been tested and found to comply with the limits for a Class B digital device, pursuant to part 15 of the FCC Rules. These limits are designed to provide reasonable protection against harmful interference in a residential installation. This equipment generates uses and can radiate radio frequency energy and, if not installed and used in accordance with the instructions, may cause harmful interference to radio communications. However, there is no guarantee that interference will not occur in a particular installation. If this equipment does cause harmful interference to radio or television reception, which can be determined by turning the equipment off and on, the user is encouraged to try to correct the interference by one or more of the following measures

- Reorient or relocate the receiving antenna.
- Increase the separation between the equipment and receiver.
- Connect the equipment into an outlet on a circuit different from that to which the receiver is connected.
- Consult the dealer or an experienced radio/TV technician for help.

This equipment complies with FCC radiation exposure limits set forth for an uncontrolled environment. This equipment should be installed and operated with minimum distance 20cm between the radiator & your body.

Channel

The Wireless Channel sets the radio frequency used for communication.

- Access Points use a fixed Channel. You can select the Channel used. This allows you to choose a Channel which provides the least interference and best performance. In the USA and Canada, 11 channel are available. If using multiple Access Points, it is better if adjacent Access Points use different Channels to reduce interference.
- In "Infrastructure" mode, Wireless Stations normally scan all Channels, looking for an Access Point. If more than one Access Point can be used, the one with the strongest signal is used. (This can only happen within an ESS).
- Is using "Ad-hoc" mode (No Access Point), all Wireless stations should be set to use the same Channel. However, most Wireless stations will still scan all Channels to see if there is an existing "Ad-hoc" group they can join.

Note: This equipment marketed in the USA is restricted by firmware to only operation on 2.4G channel 1-11

07/09/19
Other Doc. No. 15
AWC Project No. 1609

EXHIBIT G-4

European Union Declaration of Conformity and Restrictions

Hereby, Primex Inc. declares that this equipment complies with the essential requirements and other relevant provisions of Directive 1999/5/EC:

- Primex Levo Series Digital LED Clocks/Timers, .

This equipment is marked with CE and can be used throughout the European community

This indicated compliance with the R&TTE Directive 1999/5/EC and meets the relevant parts of following technical specifications:

- EN 300 328 – Electromagnetic compatibility and Radio spectrum Matters (ERM); Wideband Transmission Systems; Data transmission equipment operating in the 2.4GHz ISM band and using spread spectrum modulation techniques, Harmonized EN covering essential requirements under article 3.2 of the R&TTE directive.
- EN 301 489-17 – Electromagnetic Compatibility and Radio Spectrum Matters (ERM); Electromagnetic Compatibility (EMC) standard for radio equipment and services; Part 17 Specific Conditions for Wideband Data and HIPERLAN Equipment.
- EN 60950 – Low Voltage Directive (Safety)
- EN 50385 – Product standard to demonstrate the compliances of radio base stations and fixed terminal stations for wireless telecommunication systems with the basic restrictions or the reference levels related to human exposure to radio frequency electromagnetic fields.
- Indoor use: maximum power (EIRP*) of 100 mW for the entire 2400-2483.5 MHz frequency band
- Outdoor use: maximum power (EIRP*) of 100 mW for the 2400-2454 MHz band and with maximum power (EIRP*) of 10 mW for the 2454-2483 MHz band.

> NOTE:
> Exposure to Radio Frequency Radiation To comply with RF exposure compliance requirements, a separation distance of at least 20 cm must be maintained between the antenna of this device and all person.

The technical documentation relevant to the above equipment will be held at: Primex | 965 Wells Street | Lake Geneva, WI 53147 | Phone: 1-262-729-4853..

Signed:

Mike O'Brien | Primex, Inc. | Vice President, Channel Sales

07/09/19
Other Doc. No. 15
AWC Project No. 1609

SPECIFICATIONS - LEVO SERIES

Operation

12- or 24-hour time display

PM indicator light

Alternating time and date display option

LED dimmer option (100%, 75%, 50%, 25%)

Power outage memory backup for up to 1 hour

Power Over Ethernet (PoE) Models

PoE IEEE 802.3af Compliant

Certifications: FCC/IC/CE marked

Maximum power consumption: 12.9 Watts (Class 3)

Environment

Operating Temperature Range: 32° to 95°F (0° to 35°C); indoor use only

Storage Temperature Range: -20° to 185°F (-29° to 85°C)

Enclosure

Enclosure: ABS plastic

Junction box: UL listed (UL 50E 1st Ed; listing number E469550)

07/09/19
Other Doc. No. 15
AWC Project No. 1609

EXHIBIT G-4

Backside of the clock/timer

The backside of the clock/timer houses the mounting, power and connection inputs and setting panel.

- Key-Hole Mount (2)
- RJ45 Port - Power over Ethernet (PoE)
- RJ11 Port - Code Blue Timer models only. For connection from timer to timer control switch. Supplied with a 4 pin 30 inches (76.2 cm) connector.
- Setting Panel - Mini-USB Port, Manual Dimmer Display Button, Reset (check-in) Button

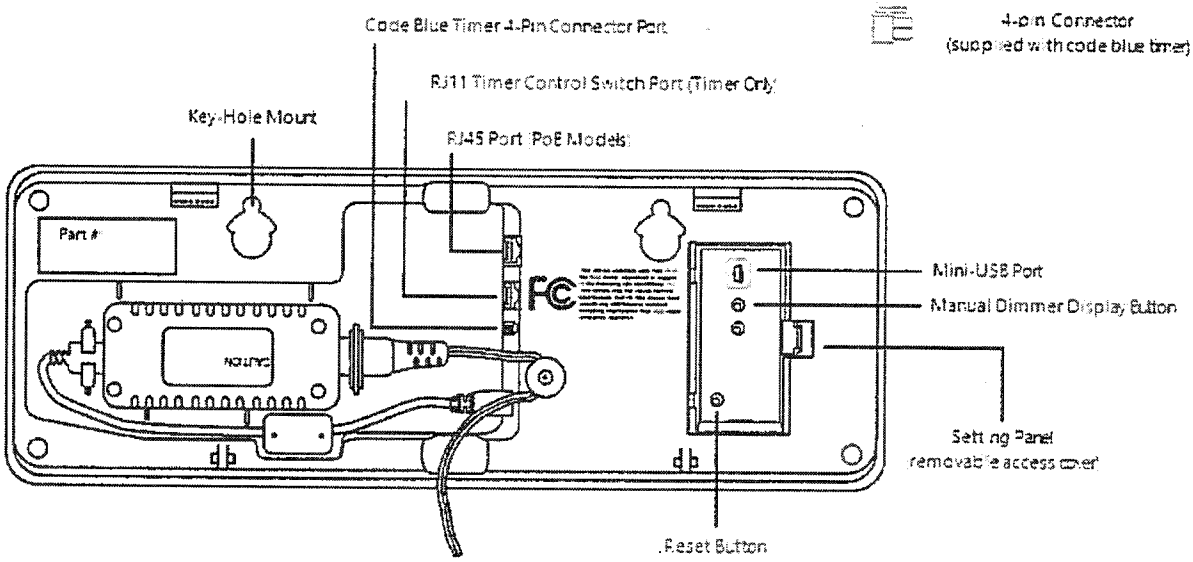

07/09/19
Other Doc. No. 15
AWC Project No. 1609

Digital code blue and elapsed timer operation

Capability of functioning as a normal clock and timer with both count-up and count-down options. When power is applied it begins operating as a digital clock.

Up counter features

- The up counter can count up from any preset time to 99:59:59 (99 hours, 59 minutes, 59 seconds)
- The decimal point on the far left (near the 10 hour digit) lights up to indicate up counter function
- The user can preset count up start time
- Up-counters can count from 00:00:00 to 99:59:59 (99 hours, 59 minutes, 59 seconds). The display flashes every second and the clock beeps for 3 seconds when 99:59:59 is reached.

Down counter features

- The count-down timer can count down from a preset time to 00:00:00
- The decimal point on the far right (near the minutes/seconds digits) lights up to indicate down counter function
- The user can preset count-down start time
- Down counters can count from 99:59:59 to 00:00:00. The display flashes every second and the clock beeps for 3 seconds when 00:00:00 is reached

Elapsed Timer audible tone

- Audible tone only on count-up and count-down events
- Frequency: 3 kHz +/- 0.5 kHz

07/09/19
Other Doc. No. 15
AWC Project No. 1609

Manual Check-In

During each check-in, a digital clock/timer synchronizes its time with a NTP Server and transmits its status to your OneVue account. Also, any pending setting changes are downloaded to the clock and events of a code blue or elapsed timer are transmitted to your OneVue account.

It's recommended to validate a clock can successfully check-in at its permanent installation location.

How to initiate a manual check-in for a Digital Clock/Timer

1. Press and release the **Reset** button.

> NOTE:
> Classic Series - Reset button is located inside the removable top panel.
>
> Levo Series - Reset button is located inside the removable backside setting panel.

The four LED circle segments illuminate in sequence, indicating the following check-in connection sequence

1 LED circle - initialized its radio

2 LED circles - connected to network

3 LED circles - received NTP time

4 LED circles - connected to OneVue

'- - - -' is shown on the LED display while the clock is waiting for the synchronized NTP time

After approximately 20 to 30 seconds, the clock automatically set its time.

07/09/19
Other Doc. No. 15
AWC Project No. 1609

EXHIBIT G-4

INSTALL LEVO SERIES DIGITAL CLOCK/TIMER

Learn how to install a Digital Clock/Timer.

07/09/19
Other Doc. No. 15
AWC Project No. 1609

Installation Requirements - Levo Series

Refer to the Important Safety Instructions before installing, operating or performing maintenance of clocks/timers.

> NOTE
> Any damage to the clock or timer due to improper wiring voids the warranty.

Clock configuration

Before installation, verify the clock is configured for the network and can successfully check-in to your OneVue account at its installation location. Commonly, a network is assigned to a clock during device preconfiguration.

Your OneVue account ID and the settings provided during device preconfiguration are configured into your clocks and each clock is labeled before they are shipped from Primex.

Power-over-Ethernet (PoE) digital clocks/timers

Requires a connection to a PoE enabled LAN. PoE power is usually injected into the LAN using either PoE enabled Ethernet switches or Mid Span power injectors. Consult with your IT department to verify the required PoE equipment is in place.

- Single-sided PoE 802.3 af Input Power Specification - 48V, 12.9 watts max power

07/09/19
Other Doc. No. 15
AWC Project No. 1609

EXHIBIT G-4

Power & Dimension Specifications

Power Requirements

PoE IEEE 802.3af Compliant

Maximum power consumption 12.9 Watts (Class 3)

Clock Type	Weight	Max. Current Draw	Height (A)	Width (B)	Depth (C)
2.5" (6.4 cm) 4-digit	1.8 lb (0.8 kg)	170 mA	5.0" (12.7 cm)	10.8" (27.3 cm)	2.2" (5.6 cm)
2.5" (6.4 cm) 6-digit	2.0 lb (0.9 kg)	230 mA	5.0" (12.7 cm)	13.8" (34.9 cm)	2.2" (5.6 cm)
4" (10.16 cm) 4-digit	3.9 lb (1.8 kg)	240 mA	8.0" (20.3 cm)	17.9" (45.5 cm)	2.4" (6.1 cm)
4" (10.16 cm) 6-digit	4.6 lb (2.1 kg)	260 mA	8.0" (20.3 cm)	23.3" (59.2 cm)	2.4" (6.1 cm)

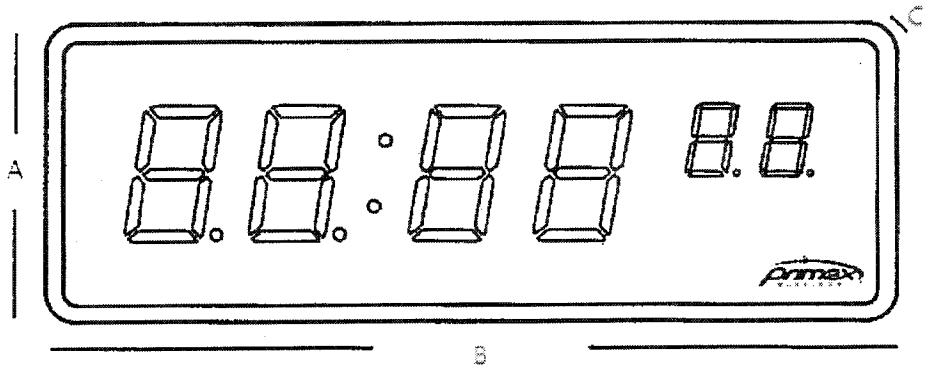

07/09/19
Other Doc. No. 15
AWC Project No. 1609

Flush mount dimensions

Clock Type	Weight	Max. Current Draw	Width (A)	Height (B)	Depth (C)
2.5" (6.4 cm) 6-digit	2.0 lb (0.9 kg)	230 mA	16.8" (42.7 cm)	16.5" (16.5 cm)	3.4" (8.6 cm)

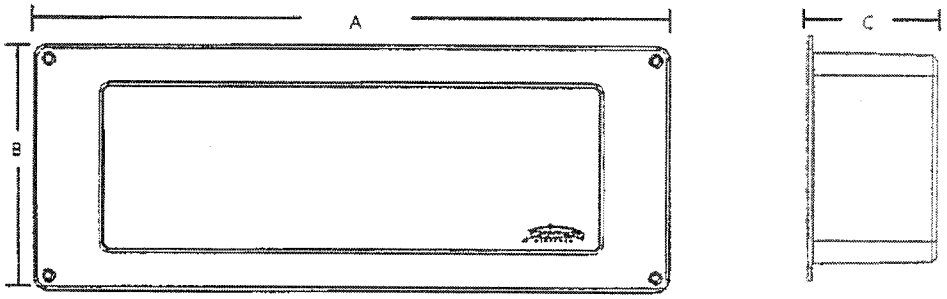

07/09/19
Other Doc. No. 15
AWC Project No. 1609

Dual-sided dimensions (use of dual clock bracket kit)

	Mounted Dimensions		
Clock Type	Width from Wall (A)	Height from Ceiling (B)	Depth of 2 Clocks (C)
Dual 2.5" (6.4 cm) 4-digit	13.8" (35.1 cm)	8.0" (20.3 cm)	5.9" (15.0 cm)
Dual 2.5" (6.4 cm) 6-digit	16.8" (42.7 cm)	8.0" (20.3 cm)	5.9" (15.0 cm)
Dual 4" (10.16 cm) 4-digit	20.9"(53.1 cm)	11.0" (27.9 cm)	6.3" (16.0 cm)
Dual 4" (10.16 cm) 6-digit	N/A*	11.0" (27.9 cm)	6.3" (16.0 cm)

*4" 6-digit clock is not available as wall mount.

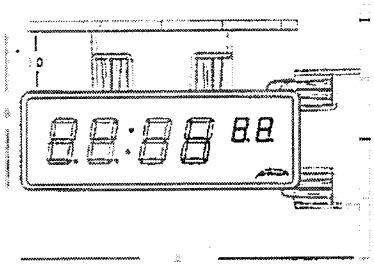

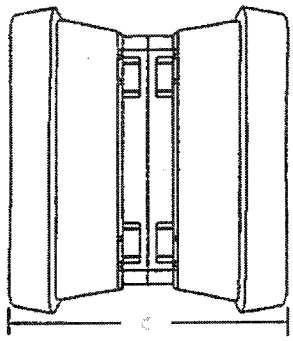

07/09/19
Other Doc. No. 15
AWC Project No. 1609

EXHIBIT G-4

Tilt Bracket Dimensions

Dimension D - clock screw hole spacing

Dimension E - distance to wall surface for 4" mounting bracket

Dimension F - distance to wall surface for 18" mounting bracket

Dimension G/H - mounting bracket screw hole spacing

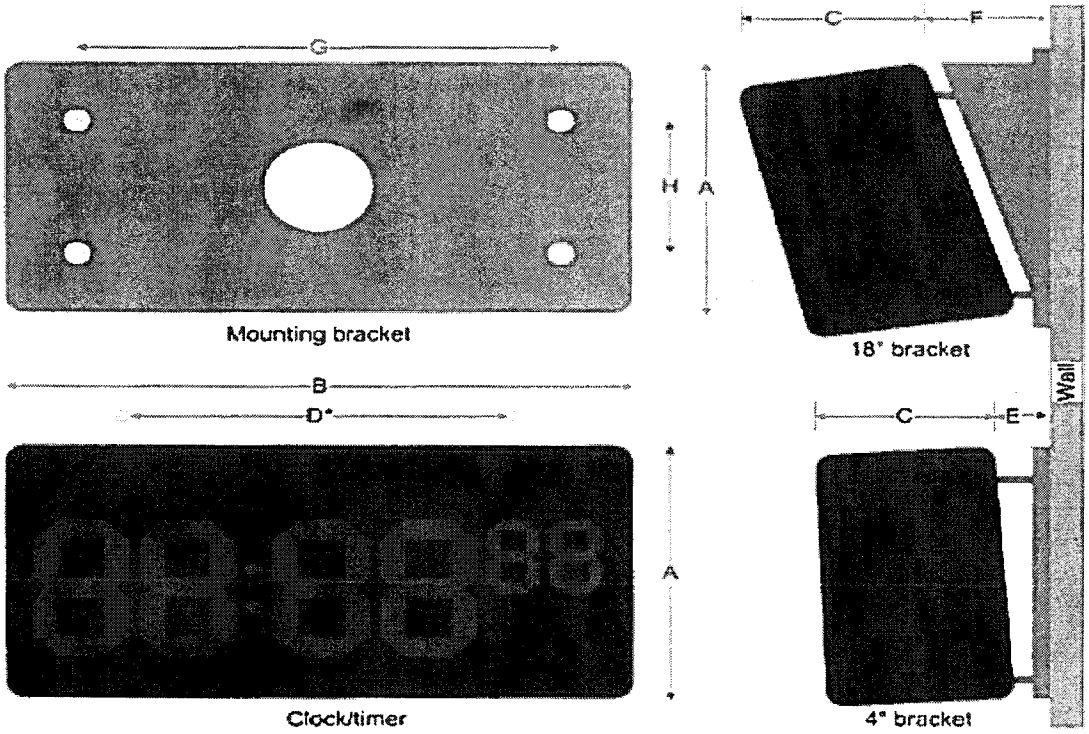

	Dimension							
Clock/Timer Model	A	B	C	D	E	F	G	H
2.5" 4-digit - 4" bracket	4.8"	10.6"	2.1"	6.0"	0.38" – 0.63"	N/A"	8.0"	2.5"
2.5" 6-digit - 4" bracket	4.8"	13.6"	2.1"	6.0"	0.38" – 0.63"	N/A	8.0"	2.5"
2.5" 4-digit - 18" bracket	4.6"	10.6"	2.2"	6.0"	N/A	2.1"	9.5"	2.5"
2.5" 6-digit - 18" bracket	4.6"	13.6"	2.1"	6.0"	N/A	2.1"	9.5"	2.5"
4" 4-digit wall mount	8.0"	17.9"	2.4"	14"	0.4 – 0.9"	N/A	12.0"	4.0"
4" 6-digit wall mount	8.0"	23.3"	2.4"	14"	0.4 – 0.9"	N/A	12.0"	4.0"

07/09/19
Other Doc. No. 15
AWC Project No. 1609

Tilt Bracket Mount

A Levo Series Digital Clock/Timer can be tilt-mounted to a wall surface with use of the supplied tilt bracket.

How to mount a clock/timer to a wall surface with use of the supplied tilt bracket

> NOTE
> AC-powered clocks are supplied with a power cord with a two-prong plug. The two-prong plug may be removed for a hardwired (pigtail) installation. Hardwired installation requires a 120V~ power line in a junction box installed by a licensed electrician. Leave a minimum of 6 in. (15 cm) of cord inside the junction box.
>
> The tilt bracket has a center pass-through hole for the 120V~ pigtail. If a junction box is present, the tilt bracket has mounting holes spaced to allow direct attachment of the tilt bracket to the junction box cover plate screw holes

1. Mount the tilt bracket directly to the wall with the four #10 screws and anchors (supplied). To determine the spacing of the screws, see For more information, see "Tilt Bracket Dimensions" on the previous page.
2. Latch the clock onto the tilt bracket. The top latch position determines the tilt degree.

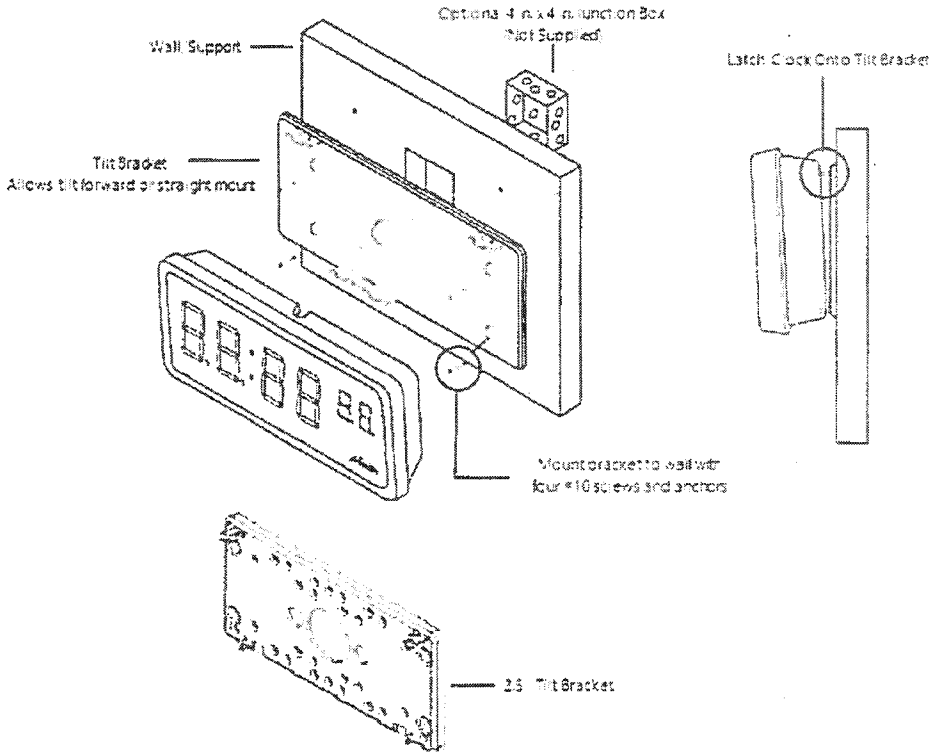

07/09/19
Other Doc. No. 15
AWC Project No. 1609

Wall Mount Install

A Levo Series Digital Clock/Timer can be mounted directly to the surface of a wall by use of the clock key-hole mounts and the supplied screws and anchors

> NOTE:
> Most building codes prohibit the use of hardwired power connections for devices that can be removed without tools. A clock/timer mounted directly to a wall is required to have a standard power plug.

How to directly mount a clock/timer to the surface of a wall

1. Mount the clock/timer directly to the wall with the two #10 screws and anchors (supplied). To determine the spacing of the screws, refer to For more information, see "Tilt Bracket Dimensions" on page 17.

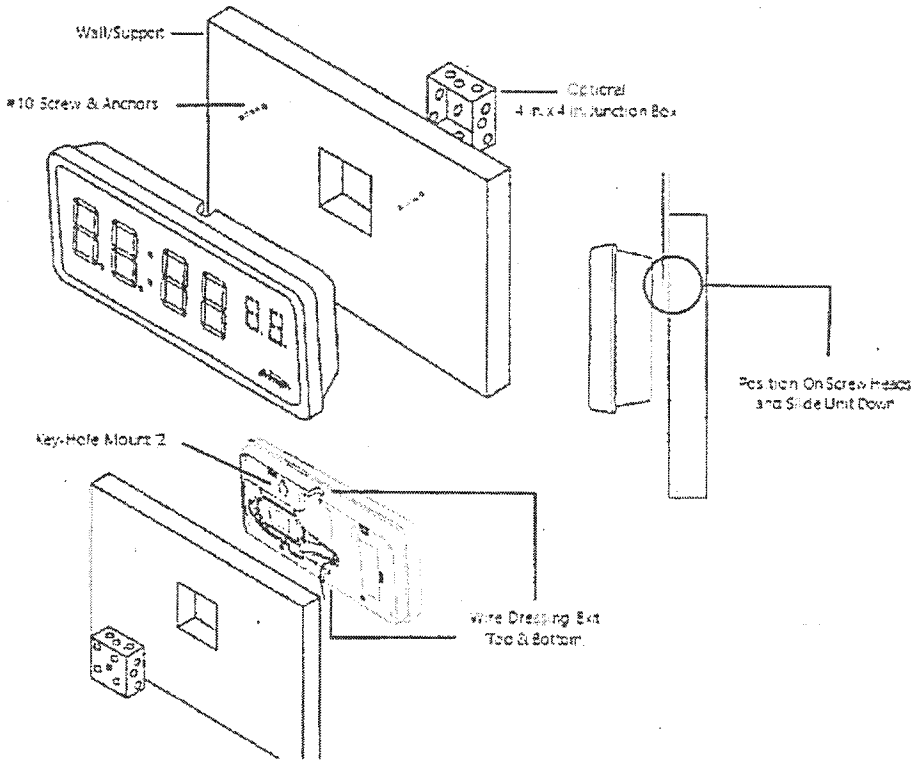

07/09/19
Other Doc. No. 15
AWC Project No. 1609

EXHIBIT G-4

Dual Clock Bracket Kit Assembly & Mounting

A Levo Series Dual-Sided Digital Clock/Timer consists of two single-sided clocks and a Dual Clock Bracket Kit.

The kit includes a dual housing bracket, a flange that mounts to ceiling or wall, and the hardware necessary to complete the installation. Using the kit, you combine the two single-sided clocks to create a dual-sided clock.

The two clocks function independently of each other. The clocks are monitored and managed as two single units in your OneVue account.

> NOTE:
> The 4" x 6 digit version of digital clock cannot be wall mounted – ceiling only

Dual Clock Bracket Kit supplied parts

(1) Flange (mounts to ceiling or wall)

(1) Bracket (bolts to flange and to which two clocks are mounted)

Hardware necessary to complete the installation.

Parts required (not supplied)

(1) Electrical junction box

Cord retaining clips

07/09/19
Other Doc. No. 15
AWC Project No. 1609

How to assemble and mount a dual-sided digital clock/timer

1. On the wall or ceiling, measure and drill holes with the correct spacing to mount the flange over the junct on box

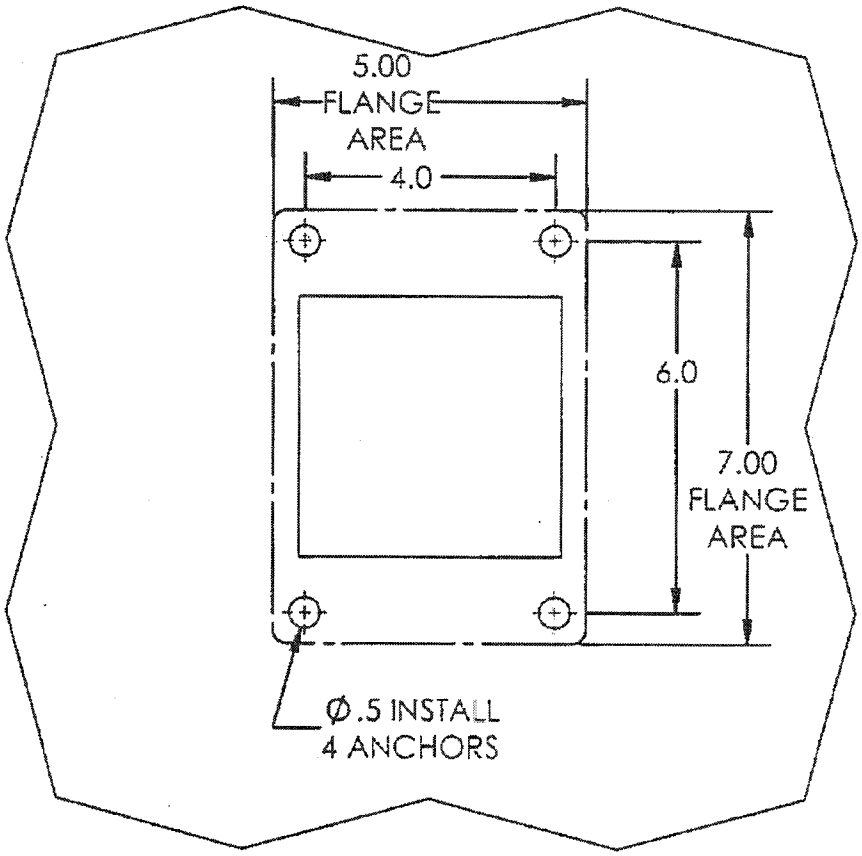

DRY WALL OPENING
AND HOLE PATTERN
FROM CENTER

2. Attach the flange to the wall or ceiling using the toggle anchors and the longer machine screws provided

NOTE:
Wall-mount: if the mounting location is outside of the junct on box, break off or cut openings in flange to route power cords.

3. Attach the bracket to the flange using the supplied shorter machine screws, nuts, and washers
4. For wall mount only, knock out power cord break
5. Wire clocks to main power, using cord retaining clips to dress wires
6. Align the clock to the bracket hooks and hinges and snap into place

07/09/19
Other Doc. No. 15
AWC Project No. 1609

EXHIBIT G-4

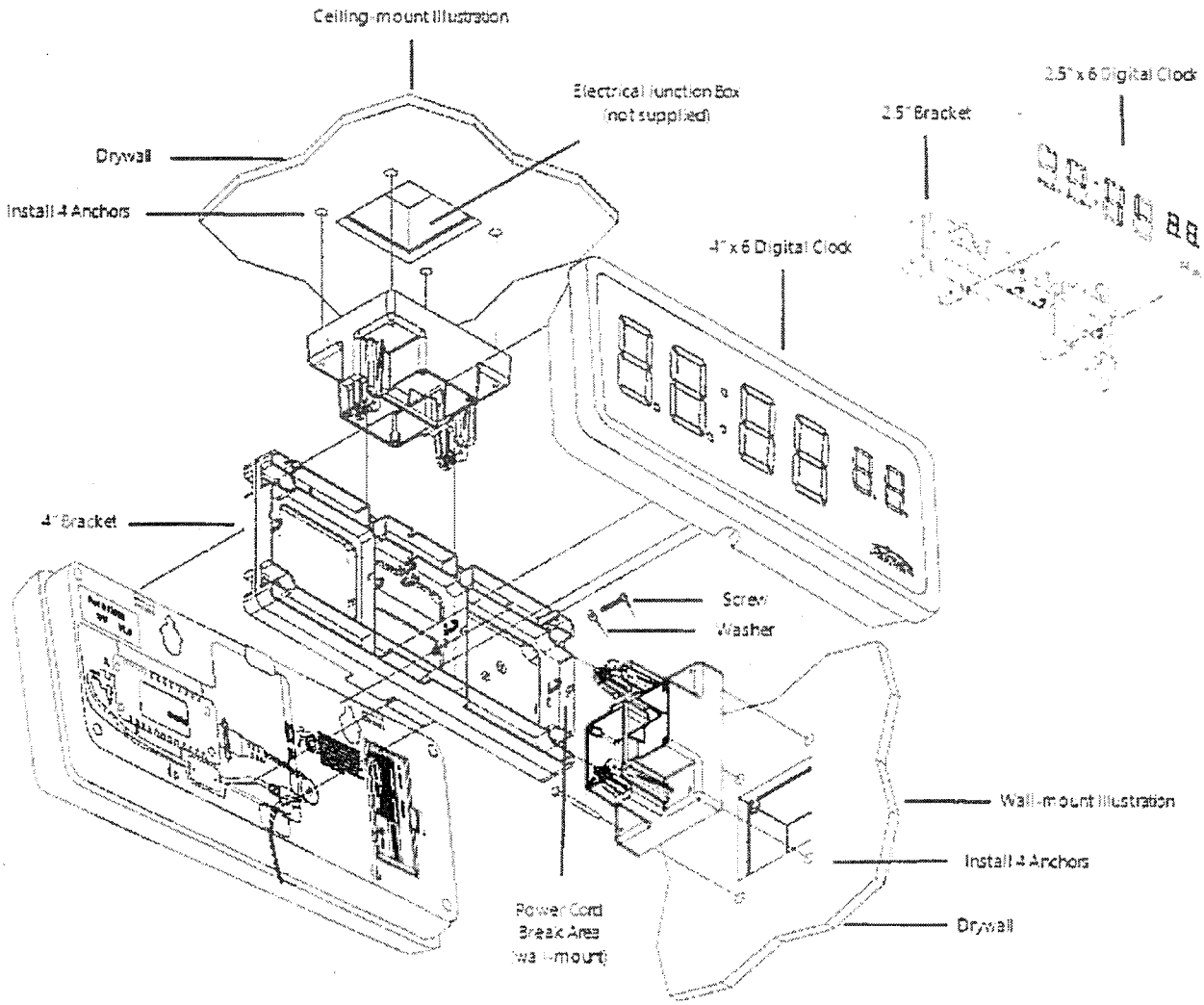

07/09/19
Other Doc. No. 15
AWC Project No. 1609

EXHIBIT G-4

Flush Mount Install

A Levo Series Digital Clock/Timer Flush Mount model can be installed to either a new or existing wall surface.

Supplied parts

(1) Flush mount junction box (Material: ABS plastic, color black, and UL Rated 94-V0)

(1) Bezel (material: ABS plastic, color black, and UL Rated 94-V0)

(4) #10 Phillips Flat Head Screw

(4) Drywall Anchors

How to install a flush mount clock/timer

1. Mount the junction box.

New Wall Surface - mount the junction box to wall studs using four common drywall screws (not supplied), as shown in New Wall Surface - Flush Mount Assembly Illustration. Remove the applicable conduit knockout(s) for the incoming AC-power, and the timer input for a timer model only. Do not remove knockouts that you will not be using.

Existing Wall Surface - cut a 14.4 in. (36.5 cm) wide x 5.8 in.(14.7 cm) high wall opening between two wall studs, as shown in Existing Wall Surface - Flush Mount Assembly Illustration. Securely mount the junction box to all studs using four common drywall screws (not supplied) at each of the corner locations. Remove the applicable conduit knockout(s) for the incoming AC-power conduit and the timer input conduit (required for timer models only). Do not remove knockouts that you will not be using.

> NOTE
> For timer models only, AC wiring is required to be located to the right side of the junction box divider and the timer input to the left side.

1. Connect the conduit connection(s) to the junction box.
2. **New Wall Surface only** - cut out a 14 in. (35.5 cm) wide x 5.25 in. (13.3 cm) high wall opening for placement of the clock assembly. Trim opening if necessary.
3. Gently snap the flush mount bezel onto the front of the clock/timer.
4. Secure wiring and complete AC-power. For timer models, secure and complete timer input connections.
5. Insert the clock assembly into wall opening.
6. Level the clock assembly within wall opening and secure bezel to the wall surface using the four screws and anchors (supplied) at each of the corner locations.

07/09/19
Other Doc. No. 15
AWC Project No. 1609

EXHIBIT G-4

New Wall Surface - Flush Mount Assembly Illustration

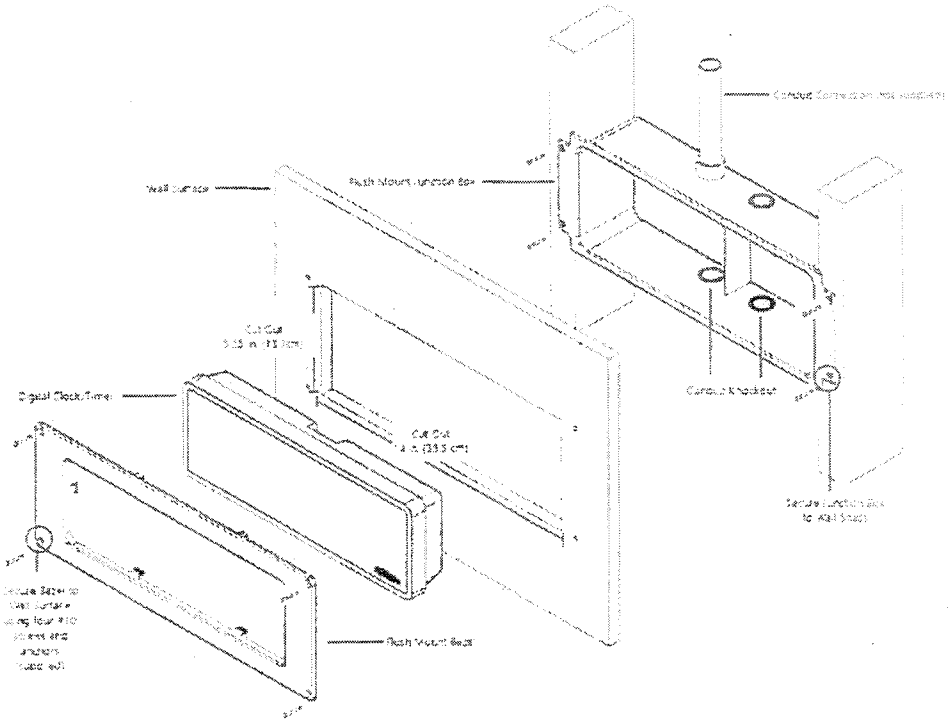

07/09/19
Other Doc. No. 15
AWC Project No. 1609

Existing Wall Surface - Flush Mount Assembly Illustration

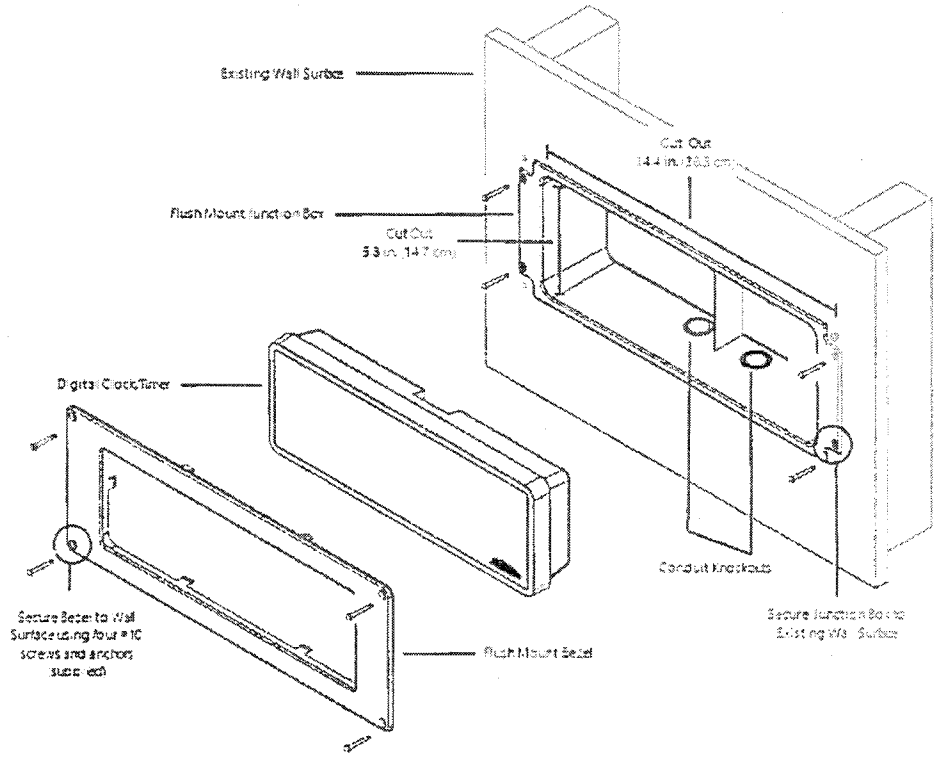

07/09/19
Other Doc. No. 15
AWC Project No. 1609

Timer Control Switch Install

Digital Elapsed and Code Blue timers include a Timer Control Switch that is required to be mounted to a single-gang junction box (not supplied). The junction box dimension is typically 2.25 in. x 2.75 in. x 4 in. (5.72 cm x 6.99 cm x 10.16 cm).

Attach timer to timer control switch

The timer control switch is not connected to the timer during shipment.

The supplied 14 feet (4.3 m) RJ11 cable is required to be connected from the timer to the timer control switch.

The cable length can be extended up to 100 feet (30 m).

How to wire timer to code blue system

For code blue systems that apply a voltage to start a code blue event

Wire the timer 4 pin connector's RED (Positive Code Blue Input) and BLACK (Negative Code Blue Input) wires to the code blue system. Cap off the WHITE and GREEN wires separately.

An input voltage of 5-120V (AC or DC) can be used. When using DC, be sure to use the correct polarity; RED wire is positive and the BLACK wire is ground. Code Blue start/stop events are triggered by the application of voltage across the code blue input wires.

For code blue systems that use a dry contact and do not inject a voltage

Wire the timer 4 pin connector GREEN (Ground) and BLACK (Negative Code Blue Input) wires together and wire the WHITE (12VDC) and RED (Positive Code Blue Input) wires to the code blue system dry contact.

07/09/19
Other Doc. No. 15
AWC Project No. 1609

EXHIBIT G-4

Installation and wiring illustration

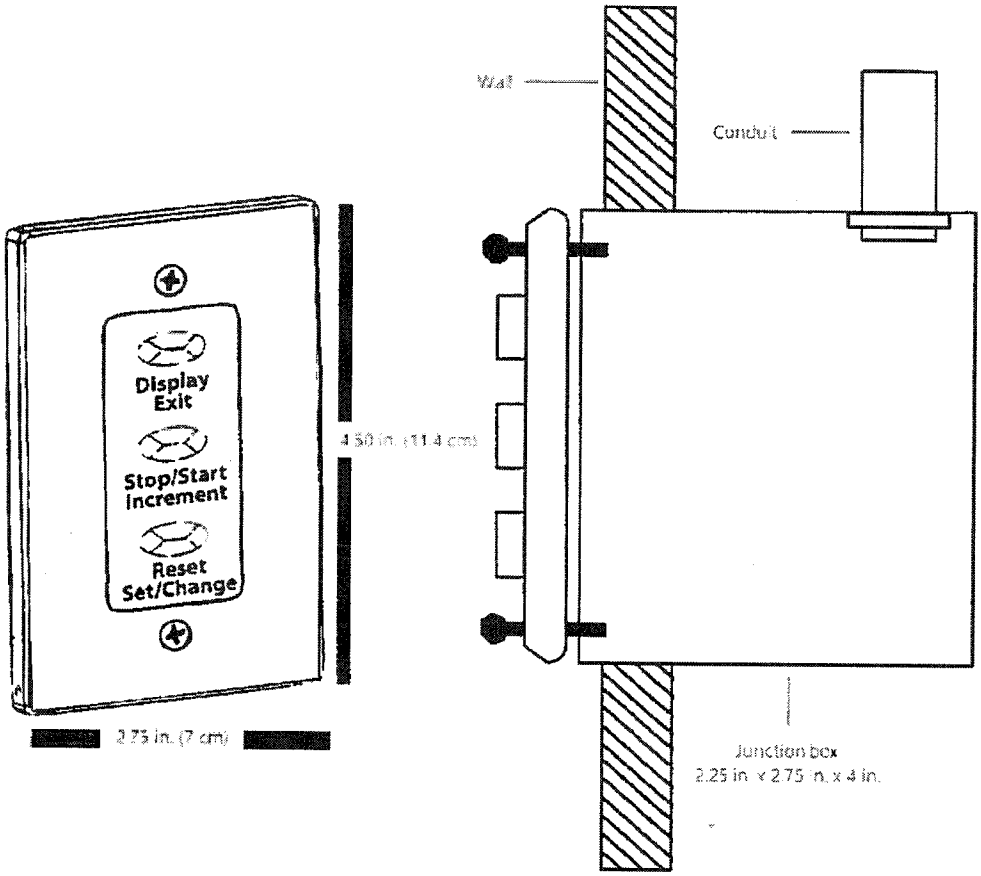

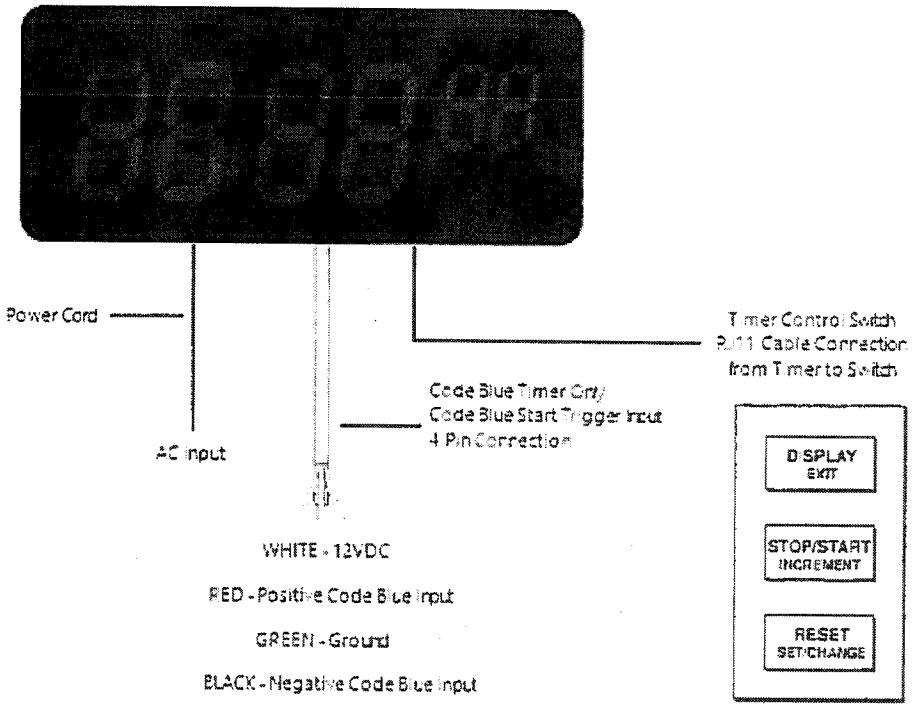

07/09/19
Other Doc. No. 15
AWC Project No. 1609

How to clean a timer control switch

The switch buttons and wall plate cover may be cleaned with water or a common disinfectant cleaning solution. Be sure to test any cleaning solutions on a small area of the switch before using it on the entire switch.

07/09/19
Other Doc. No. 15
AWC Project No. 1609

Remove from Tilt Bracket

EXHIBIT G-4

How to remove a Levo Series Digital Clock/Timer from a tilt bracket

2.5" model - from the top of the bracket using a screwdriver press each hook down to release the clock and pull out to unsnap bottom hinges.

4" model - from the top of the bracket, insert a thin screwdriver into each notch and gently move the screwdriver sideways to unlock the clock, pull clock forward and up to unsnap, and lift out.

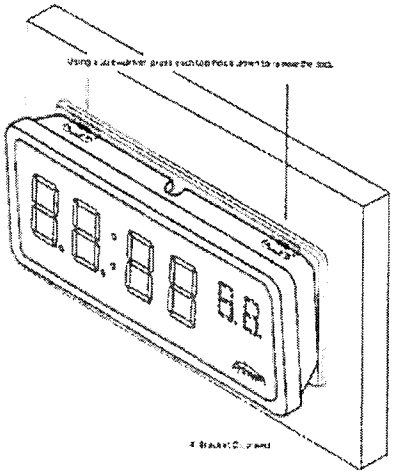

Remove from Dual Mount Bracket

How to remove a digital clock/timer from a dual mount bracket

2.5" model - from the top of the bracket, using a screwdriver press each hook down to release the clock. Then pull out to unsnap bottom hinges.

4" model - from the top of the bracket, insert a thin screwdriver into each notch and gently move the screwdriver sideways to unlock the clock, pull clock forward and up to unsnap, and lift out

07/09/19
Other Doc. No. 15
AWC Project No. 1609

ONE-YEAR LIMITED WARRANTY

EXHIBIT G-4

WARRANTY COVERAGE

Primex warrants this product to be free from defects in materials and workmanship for a standard of ONE (1) YEAR from the date of purchase. Primex will at its sole option, repair or replace any components that fail in normal use. Such repairs or replacements will be made at no charge to the customer for replacement parts. The customer will be responsible for any transportation costs. This warranty does not cover failures due to misuse, abuse, accidental or unauthorized alterations or repairs.

The warranties and remedies contained herein are exclusive and in lieu of all other warranties express or implied or statutory, including any liability arising under any warranty or merchantability or fitness for a particular purpose, implied, statutory or otherwise. In no event shall Primex be liable for any incidental, special, indirect or consequential damages, whether resulting from the use, misuse or inability to use this product or from defects in the product. Some states do not allow this exclusion or limitation of incidental or consequential damages so the above limitations or exclusion may not apply to you.

OBTAINING WARRANTY SERVICE

To obtain warranty service: If after following the instructions in the product guide, you are certain the product is defective, please contact Primex Technical Support to assist with troubleshooting the issue. If the issue cannot successfully be resolved and the product is under warranty, an RMA (Return Material Authorization) will be generated. The RMA form will be provided via email with detailed instructions for the return.

Primex retains the exclusive right to repair or replace the unit at its sole discretion. All merchandise returned must be shipped to Primex, Attn: Returns Dept., N3211 County Road H, Lake Geneva, WI 53147. Primex retains the exclusive right to repair or replace the unit at its sole discretion. Such shall be your sole exclusive remedy for any breach of warranty.

07/09/19
Other Doc. No. 15
AWC Project No. 1609

EXHIBIT G-4

You may require Technical Support when you have questions about product features, system configuration or troubleshooting. Support services are delivered in accordance with your organization's support agreement, end user licenses agreements, and warranties, either with a Primex Certified Sales and Service Partner or directly with Primex.

Support through Primex Certified Sales and Service Partners

Ensuring our customers experience excellent service is of utmost importance to Primex. Our network of Certified Sales and Service Partners offer technical support services for Primex products.

If you have purchased Primex products or have a service agreement with a Primex Partner, they are your primary contact for all Technical Support inquires.

When contacting Primex Technical Support

Make sure you have satisfied the system requirements that are listed in your product documentation. Also, you should be at the computer or device on which the problem occurred, in case it's necessary to replicate the problem.

When you contact Primex Technical Support, please have the following information available

- Customer ID/Account Name
- Problem description/error messages
- Device hardware information
- Troubleshooting performed before contacting Primex
- Recent network changes

Primex Technical Support

Hours 8:00 a.m. to 5:00 p.m. CST | Monday through Friday

Phone: 1-262-729-4860

Email: techsupport@primexinc.com

Web: www.primexinc.com/support

07/09/19
Other Doc. No. 15
AWC Project No. 1609

SUBJECT: **RFQ FOR DESIGN-BUILD SVCS FOR VERTICAL/ARCHITECTURAL PROJECTS**

BID # **CDB-0007-16**

OPEN DATE: **10/21/2015**

COMPETITIVE SEALED PROPOSAL EVALUATION COMMITTEE

KIND AND BASIS OF CONTRACT:
CONSTRUCTION – DESIGN/BUILD

AGENCY: **DEPARTMENT OF PUBLIC WORKS**

BASIS OF AWARD: **QUALIFICATIONS BASED**

NUMBER OF BIDS INVITED: - NUMBER RECEIVED: - OTHER: -

SUMMARY OF BIDS AND RECOMMENDED ACTIONS:

The 911 Backup Call Center project was awarded to Auld & White Constructors, LLC, on 03/01/18 in the amount of $121,990.94; Change Order #1 was awarded on 08/16/18 in the amount of $3,510,800.00.

Recommend approval of Change Order #2 to Auld & White Constructors, LLC, for the increase amount of $365,584.06 to authorize the direct purchase of furniture for the building, to address grounding requirements, ITD enhancements and the installation of the furniture. This incorporates the attached scope & fee summary "Exhibit G-3" and allowing for 22 additional days for the completion of work from notice-to-proceed. Total revised guaranteed maximum price not-to-exceed $3,998,375.00. Total annual expenditure amount is currently at $18,000,000.00; total amount spent to date is $7,827,413.43.

Funding for this project to be executed by Amendment 5C for contract # 9182-03 and encumbered by account: FRCP32EFS-069505-PW0837-01

Attachments: Recommendation Memo, Exhibit "G-3", Previous Award(s)

BUYER Marilyn Laidler
MARILYN LAIDLER

RESPECTFULLY SUBMITTED
GREGORY PEASE, CHIEF
PROCUREMENT DIVISION

CONCURRENCE BY: **Robin G. Smith, P.E., Chief, Engineering and Construction Management/ Keith Powers, Interim Director, Fire and Rescue**

(ALL AWARD ACTIONS SUBJECT TO LAWFULLY APPROPRIATED FUNDS)
ACTION OF CSPEC COMMITTEE ON RECOMMENDATIONS ABOVE

MEMBERS APPROVING 5 MEMBERS DISAPPROVING Ø DATE: 7/18/19

OTHER

ACTION OF AWARDING AUTHORITY DATE 7/19/19

APPROVED ✓ DISAPPROVED:

OTHER:

SIGNATURE OF AUTHENTICATION

Brian Hughes
Chief Administrative Officer
For: Mayor Lenny Curry
Under Authority of:
Executive Order No: 2019-02

SUBJECT: **RFQ FOR DESIGN-BUILD SVCS FOR VERTICAL/ARCHITECTURAL PROJECTS**

BID # **CDB-0007-16**

OPEN DATE: **10/21/2015**

COMPETITIVE SEALED PROPOSAL EVALUATION COMMITTEE

KIND AND BASIS OF CONTRACT:
CONSTRUCTION – DESIGN/BUILD

AGENCY: **DEPARTMENT OF PUBLIC WORKS**

BASIS OF AWARD: **QUALIFICATIONS BASED**

NUMBER OF BIDS INVITED: - NUMBER RECEIVED: - OTHER: -

SUMMARY OF BIDS AND RECOMMENDED ACTIONS:

The 911 Backup Call Center project was awarded to Auld & White Constructors, LLC, on 03/01/18 in the amount of $121,990.94.

Recommend approval of Change Order #1 to Auld & White Constructors, LLC, for the increase amount of $3,510,800.00 for final design and construction for the 911 Backup Call Center. This incorporates the attached scope & fee summary "Exhibit G-2" and allows for the guaranteed completion of work 310 days from notice-to-proceed. Total guaranteed maximum price not-to-exceed $3,632,790.94.

Funding for this project to be executed by Amendment 5B for contract # 9182-03 and encumbered by account: FRCP32EFS-069505-PW0837-01

Attachments: Recommendation Memo, Exhibit "G-2", Previous Award(s)

BUYER Marilyn Laidler
MARILYN LAIDLER

RESPECTFULLY SUBMITTED
GREGORY PEASE, CHIEF
PROCUREMENT DIVISION

CONCURRENCE BY: **William J. Joyce, P.E., Director of Operations, Public Works Department/ Kurtis Wilson, Director of Fire and Rescue**

(ALL AWARD ACTIONS SUBJECT TO LAWFULLY APPROPRIATED FUNDS)
ACTION OF CSPEC COMMITTEE ON RECOMMENDATIONS ABOVE

MEMBERS APPROVING 5 MEMBERS DISAPPROVING Ø DATE: 8/16/18

OTHER

ACTION OF AWARDING AUTHORITY DATE 8/16/18

APPROVED DISAPPROVED:

OTHER:

SIGNATURE OF AUTHENTICATION

Sam E. Mousa
Chief Administrative Officer
For: Mayor Lenny Curry
Under Authority of
Executive Order No. 2015-05

SUBJECT: **RFQ FOR DESIGN-BUILD SVCS FOR VERTICAL/ARCHITECTURAL PROJECTS**

BID # **CDB-0007-16**

OPEN DATE: **10/21/2015**

COMPETITIVE SEALED PROPOSAL EVALUATION COMMITTEE

KIND AND BASIS OF CONTRACT:
CONSTRUCTION – DESIGN/BUILD

AGENCY: **DEPARTMENT OF PUBLIC WORKS**

BASIS OF AWARD: **QUALIFICATIONS BASED**

NUMBER OF BIDS INVITED: - NUMBER RECEIVED: - OTHER: -

SUMMARY OF BIDS AND RECOMMENDED ACTIONS:

The Department of Public Works has completed negotiations with Auld & White Constructors, LLC, for the 911 Backup Call Center in accordance with subject bid.

Recommend approval of award to Auld & White Constructors, LLC, for the Guaranteed Maximum Price in the amount of $121,990.94 for 60% Design Development for the 911 Backup Call Center, per Scope & Fee Summary "Exhibit G-1" and allowing 115 days for completion from the Confirmation of Programming, Site and Buildings Layout after notice to proceed.

Funding for this project to be executed by Amendment 5A for contract # 9182-03 and encumbered by account: FRCP32EFS-069505-PW0837-01

Attachments: Recommendation Memo, Exhibit "G-1", Previous Award(s)

BUYER Marilyn Laidler
MARILYN LAIDLER

RESPECTFULLY SUBMITTED
GREGORY PEASE, CHIEF
PROCUREMENT DIVISION

CONCURRENCE BY: **Tom Fallin, P.E., Chief, Engineering and Construction Management Division/ Kurtis Wilson, Director of Fire and Rescue**

(ALL AWARD ACTIONS SUBJECT TO LAWFULLY APPROPRIATED FUNDS)

ACTION OF CSPEC COMMITTEE ON RECOMMENDATIONS ABOVE

MEMBERS APPROVING 5 MEMBERS DISAPPROVING Ø DATE: 3/01/18

Teresa R. Eichner

OTHER

ACTION OF AWARDING AUTHORITY

DATE 3/01/18

APPROVED DISAPPROVED:

OTHER:

SIGNATURE OF AUTHENTICATION Sam E. Mousa

Sam E. Mousa
~~Chief Administrative Officer~~
For: Mayor Lenny Curry
~~Under Authority of:~~
Executive Order No. 2015-05

SUBJECT: **RFQ FOR D/B SVCS OF VERTICAL/ARCHITECTURAL PROJECTS**

BID # **CDB-0007-16**

OPEN DATE: **10/21/2015**

COMPETITIVE SEALED PROPOSAL EVALUATION COMMITTEE

KIND AND BASIS OF CONTRACT:
CONSTRUCTION – DESIGN/BUILD

AGENCY: **DEPARTMENT OF PUBLIC WORKS**

BASIS OF AWARD: **EVALUATION CRITERIA**

NUMBER OF BIDS INVITED: 4 NUMBER RECEIVED: 9 OTHER: 1

SUMMARY OF BIDS AND RECOMMENDED ACTIONS:

The City had previously issued this RFP, and the evaluation committee has evaluated proposals. Subsequently, presentations were conducted and evaluated on February 4, 2016; 02/11/16 Auld & White Constructors, LLC was awarded as highest ranking firm with funding not-to-exceed $6,000,000.00 annually for a period of service for five (5) years.

Recommend approval of award to include the rate sheets as part of Exhibit A, as they were omitted from original award. No additional changes are needed.

Attachments: Recommendation Memo, Previous Award (s)

BUYER Marilyn Laudler
MARILYN LAUDLER

RESPECTFULLY SUBMITTED
GREGORY PEASE, CHIEF
PROCUREMENT DIVISION

CONCURRENCE BY: **Thomas N. Fallin, P.E., Chief, Engineering & Construction Management Division**

(ALL AWARD ACTIONS SUBJECT TO LAWFULLY APPROPRIATED FUNDS)

ACTION OF CSPEC COMMITTEE ON RECOMMENDATIONS ABOVE

MEMBERS APPROVING 5

MEMBERS DISAPPROVING _____ DATE: 6-16-16

Teresa R. Eichau

OTHER _____

ACTION OF AWARDING AUTHORITY

DATE 6/16/16

NR APPROVED ✓

DISAPPROVED: _____

OTHER: _____

Sam E. Mousa
Chief Administrative Officer
Executive Director
Curry
Urban Development
Authority

SIGNATURE OF AUTHENTICATION _____

SUBJECT: RFQ FOR D/B SVCS OF VERTICAL/ARCHITECTURAL PROJECTS

BID # CDB-0007-16

OPEN DATE: 10/21/2015

COMPETITIVE SEALED PROPOSAL EVALUATION COMMITTEE

KIND AND BASIS OF CONTRACT:
CONSTRUCTION – DESIGN/BUILD

AGENCY: DEPARTMENT OF PUBLIC WORKS

BASIS OF AWARD: EVALUATION CRITERIA

NUMBER OF BIDS INVITED: 4 NUMBER RECEIVED: 9 OTHER: 1

SUMMARY OF BIDS AND RECOMMENDED ACTIONS:

The City had previously issued this RFP, and the evaluation committee has evaluated proposals. Subsequently, presentations were conducted and evaluated on February 4, 2016. Based upon the combination of proposal and presentation evaluations, scores and rankings are as follows (Listed in alphabetical order):

1) Auld & White Constructors, LLC (Score 116)
3) Saur, Inc. (Score 115)
2) Stellar Group, Inc. (Score 115.5)

Recommend approval of award to Auld & White Constructors, LLC, as receiving the highest score in accordance with the evaluation and ranking above. Period of Service will be five (5) years from effective date of contract with funding not-to-exceed $6,000,000.00 annually. To be executed by formal contract through Office of General Counsel.

Attachments: Recommendation Memo, Scoring Matrix, Previous Award

BUYER _____
For- MARILYN LAIDLER
SBD

RESPECTFULLY SUBMITTED _____
GREGORY PEASE, CHIEF
PROCUREMENT DIVISION

CONCURRENCE BY: Thomas N. Fallin, P.E., Acting Chief-Engineering & Construction Management Division

(ALL AWARD ACTIONS SUBJECT TO LAWFULLY APPROPRIATED FUNDS)

ACTION OF CSPEC COMMITTEE ON RECOMMENDATIONS ABOVE

MEMBERS APPROVING 5

MEMBERS DISAPPROVING _____ DATE: 2/11/16

OTHER _____

ACTION OF AWARDING AUTHORITY

APPROVED ✓ DISAPPROVED: _____ DATE 2/11/16

OTHER: _____

SIGNATURE OF AUTHENTICATION _____

SUBJECT: RFQ- FOR DESIGN-BUILD SERVICES OF VERTICAL/ARCHITECTURAL PROJECTS

BID # CDB-0007-16

OPEN DATE: 10/21/2015

COMPETITIVE SEALED PROPOSAL EVALUATION COMMITTEE

KIND AND BASIS OF CONTRACT:
CONSTRUCTION – DESIGN/BUILD

AGENCY: DEPARTMENT OF PUBLIC WORKS

BASIS OF AWARD: EVALUATION CRITERIA

NUMBER OF BIDS INVITED: 4 NUMBER RECEIVED: 9 OTHER: 1

SUMMARY OF BIDS AND RECOMMENDED ACTIONS:

The City had previously issued this RFP, and the evaluation committee has evaluated proposals. Based upon the proposal evaluation, the average scores and rankings are as follows and two with tie scores (Listed in alphabetical order):

1) Auld & White Constructors, LLC (Score 87.5)
1) Sauer, Inc. (Score 87.5)
3) Stellar Group, Inc. (Score 86.5)

Pursuant to Section 2.6 – Award of Contract of the RFP, recommend approval to conduct formal interviews with each of the three-top ranked Firms.

Attachments: Recommendation Memo, Scoring Matrix, Bid Tabulation, Section 2.6, JSEB Letter

BUYER _____
for MARILYN LAIDLER

RESPECTFULLY SUBMITTED _____
GREGORY PEASE, CHIEF
PROCUREMENT DIVISION

CONCURRENCE BY: William J. Joyce, P.E., Chief-Engineering & Construction Management

(ALL AWARD ACTIONS SUBJECT TO LAWFULLY APPROPRIATED FUNDS)

ACTION OF CSPEC COMMITTEE ON RECOMMENDATIONS ABOVE

MEMBERS APPROVING 5

MEMBERS DISAPPROVING _____ DATE: 1-14-16

OTHER _____

ACTION OF AWARDING AUTHORITY

APPROVED ✓ DISAPPROVED: _____ DATE 1/14/16

OTHER: _____

SIGNATURE OF AUTHENTICATION _____

Chief Administrative Officer
For Mayor Lenny Curry
Under Authority
Executive Order No. 2015-

QWS3270X 8/30/2019 1:59 PM
FAML6350 V5.1 ** NW COJ FAMIS PRODUCTION ** 08/30/2019
LINK TO: ACCOUNT SUMMARY INQUIRY 1:59 PM

FISCAL MO/YEAR : 11 2019 CURRENCY CODE :
INDEX CODE : FRCP32EFS FIRE STATIONS CAPITAL PROJECTS
SUBOBJECT : 069505 DM-OTHER CONSTRUCTION COSTS
PROJECT : PW0837 COMBINED 911 COMM CENTER FACILITY & BACK
PROJECT DETAIL : 01 COMBINED 911 COMM CENTER FACILITY & BACK
GRANT :
GRANT DETAIL :
USER CODE :

S	AUG 2019	ANNUAL BALANCE	ALL YEARS BALANCE
ESTIMATED REVENUES	.00	.00	.00
REVENUES	.00	.00	.00
UNREALIZED REVENUES	.00	.00	.00
BUDGET	.00	-258,596.20	11,241,403.80
EXPENDITURES	721,813.34	4,687,346.28	5,463,214.84
ENCUMBRANCES	43,201.26	554,083.74	674,563.68
PRE-ENCUMBRANCES	-7,472.44	.00	.00
REMAINING BALANCE	-757,542.16	-5,500,026.22	5,103,625.28

F1-HELP F2-SELECT F4-PRIOR F5-NEXT
F9-LINK F10-PRIOR-MO F11-NEXT-MO
G005 - PRIOR RECORD DISPLAYED