SOLE SOURCE AWARD **BID # SS-0378-17**

Subject: 45 BlueTOAD Spectra Ethernet Units with BlueTOAD Hosted Software

Department: Traffic Engineering

Description of Purchase: Recommend approval of sole source award to Traffic Cast International to provide 45 BlueTOAD Spectra Ethernet/POE Module, turnkey units and BlueTOAD hosted software. Period of service for the software is three (3) years from date of award in the total expenditure amount of $256,950.00.

Funding Source: PWCP143RD549-06505-PW0057-01 – To be encumbered by purchase order

Sole Source Award To: Traffic Cast International

Price Justification: N/A

Total Award: $256,950.00 **Requisition:** 202902

Attachments: Sole Source Form and Vendor Letter & Quote

Certification as to Sole Source: John Pappas, Director, Public Works Department

THE ABOVE PURCHASE IS RECOMMENDED FOR AWARD IN ACCORDANCE WITH CHAPTER 126.206.

Analyst: Annette Burney

Gregory Pease, Chief
Procurement Division

APPROVAL OF GENERAL GOVERNMENT AWARDS COMMITTEE

"ALL AWARD ACTIONS SUBJECT TO LAWFULLY APPROPRIATED FUNDS"

CHAIRMAN ***DATE***

ACTION OF AWARDING AUTHORITY **DATE:** _____

APPROVED_____ **DISAPPROVED** _____

OTHER _____

SIGNATURE OF AUTHENTICATION _____

SS-051811

SOLE SOURCE/PROPRIETARY REQUEST

Pursuant to the City of Jacksonville Procurement Code § 126.206 & § 126.312, when requesting a purchase from a vendor subject to the referenced sections, please complete this form to justify your request and submit to Procurement with applicable attachments.

REQUESTING AGENCY (DEPT/DIVISION): PWTE011 Traffic Engineering Division

PROPRIETARY

SOLE SOURCE Yes

FUNDING SOURCE: PWCP143RD549-06505-PW0057-01

BRIEF DESCRIPTION OF GOODS/SERVICES:
45 BlueTOAD Spectra Ethernet units with BlueTOAD TrafficCast hosted software – 3 year option.

AMOUNT OF PROJECT (attach quote): $256,950.00

PROVIDE A SUMMARY OF THE SCOPE OF GOODS/SERVICES TO BE PROVIDED; IDENTIFY EACH ITEM, COMPONENT OR SERVICE BEING PROCURED (ATTACH QUOTE/PROPOSAL):
BlueTOAD Spectra Ethernet/POE Module, turnkey units fully compatible with existing system. BlueTOAD software, web hosted unlimited data, unlimited access and all software enhancements for 3 year subscription.

PROVIDE A DETAILED JUSTIFICATION AS TO WHY THE REQUESTED GOODS/SERVICES CAN ONLY BE EFFICIENTLY AND EFFECTIVELY PROCURED THROUGH THE RECOMMENDED PROPRIETARY/SOLE SOURCE PROVIDER:
The BlueTOAD system is the only system compatible with FDOT system in Duval County. Also the only system that will detect blue tooth devices already paired.

ASSERT THAT YOU HAVE RESEARCHED THE AVAILABILITY OF THE REQUESTED GOODS/SERVICES FROM OTHER SOURCES IN APPLICABLE MARKETS AND HAVE DISCUSSED AND EVALUATED THE SAME WITH COJ'S PROCUREMENT AND EBO DIVISIONS:
This is the only company which has this software.

Submitted by: Nelson Caparas (Name) — Chief, Traffic Engineering (Title)

Date: 11/30/2016

Requesting Agency's Director's Signature: John Rogers

BlueTOAD by TRAFFICAST

Date: November 30, 2016

To: Mr. Nelson Caparas, P.E.
Chief of Traffic Engineering
City of Jacksonville, FL 32254
Ph: (904) 255-7580
E-mail: ncaparas@coj.net

From: Shelby Coke, TrafficCast International

RE: BlueTOAD Spectra, O/D & Travel-Time system.

Mr. Caparas,

Thank you for your interest in BlueTOAD, **Blue**tooth **T**ravel-time **O**rigin **A**nd **D**estination. BlueTOAD's advanced traffic monitoring systems allows for accurate travel-times and speeds, combining Bluetooth mac address matching capabilities supported by a comprehensive backend software platform for data mining and reporting. BlueTOAD installs quickly and easily with minimal impact to roadway infrastructure, and is flexible to a variety of transportation applications.

With over 1,200+ locations in Florida alone, we are pleased to submit to you the following information and quotation package. We can also submit Florida references who would love to share with you their experiences of evolving their traffic network utilizing our system.

The referenced quote begins with the unit pricing for the Spectra BlueTOAD unit which integrates with existing BlueTOAD systems deployed in the FDOT District 2 area. The quote then breaks down the units in 45 units with the software:

- 45 Spectra Ethernet units with TrafficCast Hosted Software, 3 year subscription

We were able to provide a price break for the package as you'll see list price vs reduced price in the quotes.

We look forward to supporting City of Jacksonville and serving their needs.

Regards,
Shelby.

BlueTOAD by TRAFFICAST

45 BlueTOAD Spectra Ethernet units, with BlueTOAD TrafficCast hosted Software for the City of Jacksonville 3 year option:

POE Spectra Ethernet based BlueTOAD System			
Item	**List Price**	**Reduced Price**	**Quantity (x 45)**
BlueTOAD Spectra Ethernet/POE Module, turnkey units fully compatible with existing system	$4,470./each	$3,940.0/each	$177,300.0
TrafficCast Hosted Software			
BlueTOAD Software, Web hosted, unlimited data, unlimited access and all software enhancements for 3 year software subscription	$660.0	$590.0	$79,650.0
Total Turnkey Delivery	**$230,850.0**		**$256,950.0**

- Freight: Prepay & Charge
- FOB: Barrington, Ill
- Does not include jumper wire from POE injector to switch for Ethernet unit
- Software includes 3 year subscription
- TrafficCast shall setup City of Jacksonville Group, Accounts and login ids and training via webex at no charge. Also, facilitate coordination with FDOT2 co-hosting of data

BlueTOAD™
by TRAFFICAST

Date: November 30, 2016

To: Mr. Nelson Caparas, P.E.
Chief of Traffic Engineering
City of Jacksonville, FL 32254
Ph: (904) 255-7580
E-mail: ncaparas@coj.net

From: Shelby Coke, TrafficCast International

RE: BlueTOAD Spectra, O/D & Travel-Time system.

Mr. Caparas,

Thank you for your interest in BlueTOAD, **Blue**tooth **T**ravel-time **O**rigin **A**nd **D**estination. BlueTOAD's advanced traffic monitoring systems allows for accurate travel-times and speeds, combining Bluetooth mac address matching capabilities supported by a comprehensive backend software platform for data mining and reporting. BlueTOAD installs quickly and easily with minimal impact to roadway infrastructure, and is flexible to a variety of transportation applications.

With over 1,200+ locations in Florida alone, we are pleased to submit to you the following information and quotation package. We can also submit Florida references who would love to share with you their experiences of evolving their traffic network utilizing our system.

The referenced quote begins with the unit pricing for the Spectra BlueTOAD unit which integrates with existing BlueTOAD systems deployed in the FDOT District 2 area. The quote then breaks down the units in 45 units with the software:

- 45 Spectra Ethernet units with TrafficCast Hosted Software, 3 year subscription

We were able to provide a price break for the package as you'll see list price vs reduced price in the quotes.

We look forward to supporting City of Jacksonville and serving their needs.

Regards,
Shelby.

BlueTOAD by TRAFFICAST

BlueTOAD SPECTRA POE: Power Over Ethernet

Applications

Ideal for use at intersection or other ITS locations with an existing cabinet and switch. Self contained antenna unit mounted 12' above roadway. XML feed and DMS board ready.

Pricing	Unit Price
BlueTOAD Spectra Detector Card	$4,470.00

Includes:

Spectra POE Ethernet –NEMA enclosure, BlueTOAD Omni-directional antenna - 4 dBi with universal bracket, 75' CAT-5 cable, power supply and POE injector.

Software and Communication

Software, Data hosting, Processing & Software Enhancements (per year) $660.00

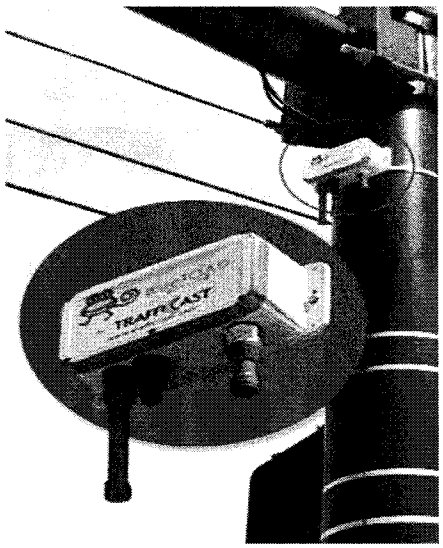

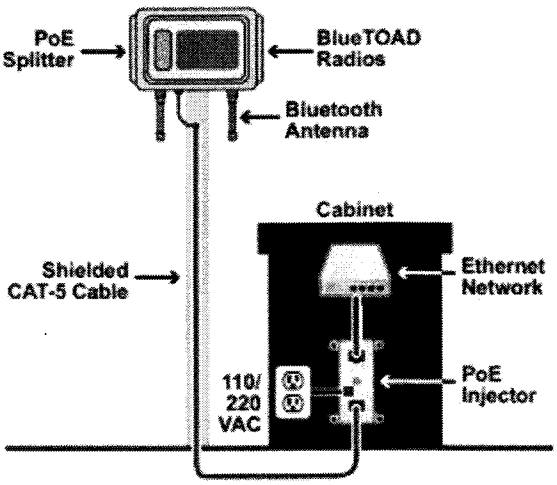

Ethernet
Power over Ethernet (PoE)

BlueTOAD by TRAFFICAST

45 BlueTOAD Spectra Ethernet units, with BlueTOAD TrafficCast hosted Software for the City of Jacksonville 3 year option:

POE Spectra Ethernet based BlueTOAD System			
Item	**List Price**	**Reduced Price**	**Quantity (x 45)**
BlueTOAD Spectra Ethernet/POE Module, turnkey units fully compatible with existing system	$4,470./each	$3,940.0/each	$177,300.0
TrafficCast Hosted Software			
BlueTOAD Software, Web hosted, unlimited data, unlimited access and all software enhancements for 3 year software subscription	$660.0	$590.0	$79,650.0
Total Turnkey Delivery	**$230,850.0**		**$256,950.0**

- Freight: Prepay & Charge
- FOB: Barrington, Ill
- Does not include jumper wire from POE injector to switch for Ethernet unit
- Software includes 3 year subscription
- TrafficCast shall setup City of Jacksonville Group, Accounts and login ids and training via webex at no charge. Also, facilitate coordination with FDOT2 co-hosting of data

Williams, Sharon

From:	Arnett, Perry
Sent:	Wednesday, November 30, 2016 2:07 PM
To:	Williams, Sharon
Cc:	Zelaya, Nicholas
Subject:	FW: City of Jacksonville, BlueTOAD updated information.
Attachments:	BlueTOAD SAS package, CoJ 11-30-16.pdf

This is the new quote REQ.# 202902.
Thanks,
Perry

From: Chism, Cindy **On Behalf Of** TrafficEng
Sent: Wednesday, November 30, 2016 1:42 PM
To: Arnett, Perry
Subject: FW: City of Jacksonville, BlueTOAD updated information.

Perry,

He re-did the quote and took the 26k out. Can you re-do the requisition? Thanks!

Cindy

From: Shelby Coke [mailto:scoke@trafficcast.com]
Sent: Wednesday, November 30, 2016 1:40 PM
To: Caparas, Nelson
Cc: TrafficEng
Subject: RE: City of Jacksonville, BlueTOAD updated information.

From: Shelby Coke [mailto:scoke@trafficcast.com]
Sent: Tuesday, November 22, 2016 11:46 AM
To: Caparas, Nelson <NCaparas@coj.net>
Subject: Re: City of Jacksonville, BlueTOAD updated information.

Shelby Coke, P.E., PTOE

Product Specialist

P: 225.362.4575

scoke@trafficcast.com<senburg@trafficcast.com> | www.trafficcast.com

Thank you,
Shelby Coke
225-362-4575

On Nov 22, 2016, at 11:42 AM, Caparas, Nelson <NCaparas@coj.net> wrote:

Shelby,
I need your contact info and company info. I have your card in my office and I'm on the road.
Will you please send it to me.
Thank you.
Nelson--

Sent from my Verizon Wireless 4G LTE DROID

Shelby Coke <scoke@trafficcast.com> wrote:

Good morning Nelson,

Great meeting and you guys have a great plan, locations and team.

Please see the revised quote for 45 Spectra BlueTOAD units with 3 years of service. We were able to revise the hardware price and software price. Also please sole source documentation.

Also, this deployment will be easily integrate-able with the existing FDOT2 account at no extra charge.

If you need any more details, revisions or edits, please call or email me and I will handle.

Regards,
Shelby.

Shelby Coke, P.E., PTOE
Product Specialist
<image001.jpg><image002.jpg>
P: 225.362.4575
scoke@trafficcast.com | www.trafficcast.com

<image001.jpg>
<image002.jpg>