6

SUBJECT: PIGGYBACK SOURCEWELL CONTRACT #060920-NVS WITH NAVISTAR, INC (DBA) INTERNATIONAL TRUCK

BID #: PSC-0334-23 **OPEN DATE:** N/A

GENERAL GOVERNMENT AWARDS COMMITTEE

KIND AND BASIS OF CONTRACT: PIGGYBACK CONTRACT – DATE OF AWARD THROUGH AUGUST 1, 2024

AGENCY: FLEET MANAGEMENT

BASIS OF AWARD: PIGGYBACK CONTRACT

NUMBER OF BIDS INVITED: N/A **NUMBER RECEIVED:** N/A **OTHER:** N/A

SUMMARY OF BIDS AND RECOMMENDED ACTIONS:
Recommend approval to increase award with Navistar, Inc. (dba) International Truck through the authorized Florida distributor, Cumberland International Trucks of Florida, LLC, using Sourcewell Contract #060920-NVS for the purchase of one (1) 2024 International CV515 chassis with 9' Knapheide Utility Body for Traffic Engineering, in the amount of $88,491.50. Estimated annual expenditure amount not-to-exceed $524,261.07.

Funding shall be encumbered from account 51103.114001.564010.000000.00000500.00000.0000000 - executed by formal contract agreement AMD #2 through the Office of General Counsel and processed via Purchase Order(s).

ATTACHMENTS: Recommendation Memo; Supplier Quote, Previous Awards, Contract

ANALYST: _____ Corey Sidlo

RESPECTFULLY SUBMITTED: _____ DUSTIN FREEMAN, CHIEF PROCUREMENT DIVISION

CONCURRENCE BY: CRIS TONGOL, CHIEF, FLEET MANAGEMENT

(ALL AWARD ACTIONS SUBJECT TO LAWFULLY APPROPRIATED FUNDS)
ACTION OF GGAC COMMITTEE ON RECOMMENDATIONS ABOVE

MEMBERS APPROVING _____ MEMBERS DISAPPROVING _____ DATE: _____

_____ _____ OTHER: _____

_____ _____

_____ _____

ACTION OF AWARDING AUTHORITY DATE _____

APPROVED _____ DISAPPROVED _____

OTHER _____

SIGNATURE OF AUTHENTICATION _____

FINANCE AND ADMINSTRATION DEPARTMENT

FLEET MANAGEMENT DIVISION

Jacksonville

Where Florida Begins.

Date: December 18, 2023

To: Dustin Freeman, Chief of Procurement Division

Thru: Cris Tongol, Chief, Fleet Management

From: Erik Preacher, Fleet Management Administrator

Re: Request approval to increase award PSC-0334-23 Piggyback Sourcewell Contract #060920-NVS Purchase of International Trucks

---

Fleet Management Division is requesting approval to increase award PSC-0334-23 for the purchase of (1) 2024 International CV515 Chassis with 9' Knapheide Utility Body for Traffic Engineering.
The period of Service is Date of Award through August 1, 2024. Total estimated of increase will be $88,491.50. Total estimated expenditures will be $524,261.07.

Funding will be encumbered by purchase order.
Funding source: 51103.114001.564010.000000.00000500.00000.0000000

2581 Commonwealth Ave. Jacksonville, FL 32254 Phone: 904.255-7490 Fax: 904.381.4607 www.coj.net

International Trucks is pleased to provide you with this proposal compliant with all terms of the Sourcewell Vehicles and Chassis Contract #060920-NVS awarded to Navistar, Inc for new International Truck. If you have any questions regarding enrollment in Sourcewell or detailed contract terms and conditions, please see your International Truck sales representative.

	PROPOSAL PREPARED FOR:	PROPOSAL PREPARED BY:
Sourcewell Member:	City of Jacksonville	Cumberland International
Contact:	David Hylszewski	O'Brien
Address:	117 West Duval St Suite 375	1881 Pickettville Rd
City/State/Zip:	Jacksonville, FL 32202	Jacksonville, FL 32220
Phone:	(904) 630-1234	(904) 783-9822
Email:	Davidhy@coj.net	mohnson@elite.com

Proposal Number	9899-01
Date	12/4/2023
Quantity of this Specification	1
Single Sourcewell Transaction Total Volume	1

Chassis				
New 2024 International CV515 Chassis			$	69,760.00
Base Chassis List	$	58,244.00		
Options List	$	11,516.00		
Sourcewell Contract Discount	$	6,000.00	$	(6,000.00)
Volume Incentive			$	-
Freight			$	1,950.00
Raw Material Increase			$	-
Chassis Handling Fee (Limited to $1000)			$	1,500.00
Net Sourcewell Chassis Price			$	67,210.00
Sourcewell Partner Body				
			$	-
			$	-
		4.00%	$	-
Non-Sourcewell Dealer Supplied Body				
9' Knapheide utility body			$	19,680.00
			$	-
Handling Fee		5.00%	$	984.00
Additional Post Build Work				
dot inspection, clean for delivery			$	350.00
			$	-
			$	-
Handling Fee		5.00%	$	17.50
Service Contracts				
ESC Warranty			$	-
			$	-
			$	-
Additional Freight				
deliver to upfitter and to City			$	250.00
			$	-
Additional Floorplan				
			$	-
			$	-
Additional Fees & Taxes				
			$	-
			$	-
			$	-
Final Sourcewell Per Vehicle Price FOB Jacksonville, Fl			$	88,491.50
Final Sourcewell Total Vehicle(s) Price			$	88,491.50

Additional Sourcewell Qualified Content	
Customer Parts Credit - Fleet Charge only	$200
Silver Package Award	$1,200

Terms: Stock unit in dealer's inventory, dealer will accept a final purchase order using the current Sourcewell pricing quoted above.

Dealer placing a new orders for the Sourcewell Member, the purchase order cannot be firmed up until the unit is slotted to build with a firm build date or lineset.
Once a firm build date has been established, dealer will provide the Sourcewell Member approved pricing and a final purchase order can be accepted with firm pricing.
Dealer cannot guarantee bodies and/or equipment pricing added to the chassis for a turnkey sale until chassis is lineset.

INTERNATIONAL®

December 05, 2023

Prepared For:
CITY OF JACKSONVILLE
David Hylazewski
117 W Duval St. Ste. 375
Jacksonville, FL 32202-5725
(904)255 - 7470
Reference ID: N/A

Presented By:
Cumberland International Trucks, Inc.
Michael O'Brien
1881 Pickettville Road
Jacksonville FL 32220 -
(904)783-9822

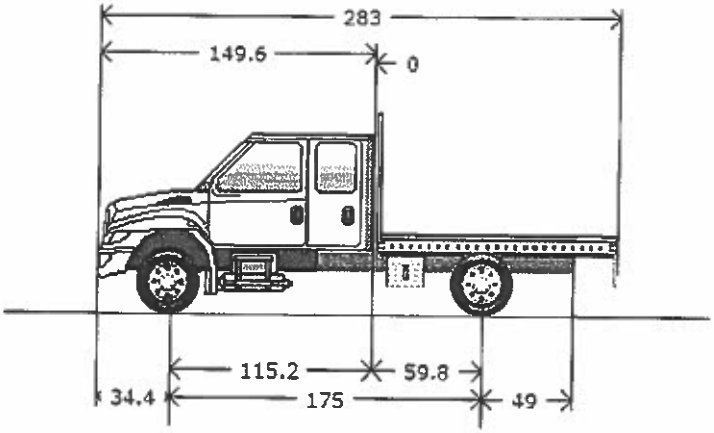

Model Profile
2024 CV515 SFA (CV515)

AXLE CONFIG:	4X4
MISSION:	Requested GVWR: 19500. Calc. GVWR: 19500. Calc. GCWR: 26000
DIMENSION:	Wheelbase: 175.00, CA: 59.80, Axle to Frame: 49.00
ENGINE, DIESEL:	{International 6.6} EPA 2024, 350HP @ 2500 RPM, 750 lb-ft Torque @ 1400 RPM, 2900 RPM Governed Speed, 350 Peak HP (Max)
TRANSMISSION, AUTOMATIC:	{Allison 1700 RDS} 6th Generation Controls, Close Ratio, 6-Speed with Double Overdrive, with PTO Provision, Less Retarder, Includes Park Pawl, with 19,500-lb GVW and 26,000-lb GCW Max, On/Off Highway
AXLE, FRONT DRIVING:	{Dana Spicer 60-256} Single Reduction, 7,500-lb Capacity, with Hub Piloted Wheel Mounting
AXLE, REAR, SINGLE:	{Dana Spicer S14-110} Single Reduction, 13,500-lb Capacity, 190 Wheel Ends Gear Ratio: 4.30
CAB:	Conventional 6-Man Crew Cab
TIRE, FRONT:	(2) 225/70R19.5 Load Range G R02 PROFUEL STEER (PIRELLI), 646 rev/mile, 87 MPH, All-Position
TIRE, REAR:	(4) 225/70R19.5 Load Range G R02 PROFUEL DRIVE (PIRELLI), 643 rev/mile, 87 MPH, Drive
SUSPENSION, REAR, SINGLE:	13,500-lb Capacity, Vari-Rate Springs
PAINT:	Cab schematic 100CX Location 1: 9219, Winter White (Std) Chassis schematic N/A

Proposal: 9899-01

Description
Base Chassis, Model CV515 SFA with 175.00 Wheelbase, 59.80 CA, and 49.00 Axle to Frame.

AXLE CONFIGURATION

AXLE CONFIGURATION {Navistar} 4x4

Notes
: Pricing may change if axle configuration is changed.

ENGINE

ENGINE, DIESEL {International 6.6} EPA 2024, 350HP @ 2500 RPM, 750 lb-ft Torque @ 1400 RPM, 2900 RPM Governed Speed, 350 Peak HP (Max)

EMISSION, CALENDAR YEAR {International 6.6} EPA, OBD and GHG Certified for Calendar Year 2024

CARB EMISSION WARR COMPLIANCE for International 6.6 Engines

CARB IDLE COMPLIANCE Low NOx Idle Engine, Complies with California Clean Air Regulations; Includes "Certified Clean Idle" Decal on Hood

VEHICLE REGISTRATION IDENTITY ID for Other State

Notes
: CANNOT BE REGISTERED IN CALIFORNIA. For vehicles that will be registered in States other than California.

RADIATOR Aluminum, 3-Row, Down Flow, Front to Back System, 730 Sqin Louvered, with 578 Sqin Charge Air Cooler, Includes In-Tank Oil Cooler

FAN DRIVE Viscous Type, Screw On, Rear Tether, Electronically Controlled

AIR CLEANER Single Element, with Water Separator

GOVERNOR Electronic Road Speed Type; with 79 MPH Default

THROTTLE, HAND CONTROL Engine Speed Control for PTO; Electronic Controlled, On/Off Switch Mounted on Dash, with Steering Wheel Button Control

TRANSMISSION

TRANSMISSION, AUTOMATIC {Allison 1700 RDS} 6th Generation Controls, Close Ratio, 6-Speed with Double Overdrive, with PTO Provision, Less Retarder, Includes Park Pawl, with 19,500-lb GVW and 26,000-lb GCW Max, On/Off Highway

NEUTRAL AT STOP Allison Transmission Shifts to Neutral When Service Brake is Depressed and Vehicle is at Stop; Remains in Neutral Until Service Brake is Released

PTO LOCATION Dual, Customer Intends to Install PTO at Left and/or Right Side of Transmission

SHIFT CONTROL PARAMETERS {Allison} 1000 or 2000 Series Transmissions, Performance Programming

TRANSFER CASE {Meritor MTC-3203} 2-Speed, Gear Drive, 3,000 lb-ft Torque Rating, Less PTO Provision, Electric Shift Control

Notes
: Transfer Case Includes 40W Synthetic Lube

REAR AXLES, SUSPENSIONS

AXLE, REAR, SINGLE {Dana Spicer S14-110} Single Reduction, 13,500-lb Capacity, 190 Wheel Ends . Gear Ratio: 4.30

SUSPENSION, REAR, SINGLE 13,500-lb Capacity, Vari-Rate Springs

SHOCK ABSORBERS, REAR (2)

FRONT AXLES

Description

AXLE, FRONT DRIVING {Dana Spicer 60-256} Single Reduction, 7,500-lb Capacity, with Hub Piloted Wheel Mounting

AXLE, FRONT DRIVING, LUBE {EmGard FE-75W-90} Synthetic Oil; 1 thru 29.99 Pints

FRONT SUSPENSIONS

SUSPENSION, FRONT, SPRING Parabolic Taper Leaf, Shackle Type, 7,500-lb Capacity, with Shock Absorbers

STABILIZER BAR, FRONT

CABS, COWLS, BODIES

CAB Conventional 6-Man Crew Cab

Includes
: CAB DOOR LOCKS Power Door Locks All Doors
: DOME LIGHT, CAB with OFF/DOOR/ON Settings; Located in Overhead Console
: READING LIGHT, CAB Located in Overhead Console
: STEP (4) One Step Per Door
: STORAGE POCKET, DOOR (2) Full Length, Driver and Passenger Door

AIR BAG, FRONT, DRIVER SIDE

AIR BAG, FRONT, PASSENGER SIDE

AIR BAG, SIDE, DRIVER Seat Mounted, Outboard Side-Impact Airbag

AIR BAG, SIDE, PASSENGER Seat Mounted, Outboard Side-Impact Airbag

AIR BAG, SIDE CURTAIN Roof Mounted, for Front and Rear Outboard Seating Positions for Driver and Passenger Sides

AIR CONDITIONER with Heater, Single Zone

CAB INTERIOR TRIM Classic, for Crew Cab

Includes
: SUN VISOR (2) Vinyl

COLOR, INTERIOR Dark Ash

GAUGE CLUSTER English Speedometer, Includes English Odometer; Includes 3.5" Monochromatic Display with Personalization, Warning Messages and Vehicle Information

GLASS, ALL WINDOWS Solar Absorbing, Tint

MIRROR, INSIDE REAR VIEW with Manual Tilt

MIRRORS (2) Manual Folding and Extending, Power Adjust, Heated, Turn Signal Indicator Located in Mirror, Black Heads and Arms, for 96" Load Width

SEAT, DRIVER High Back with Integral Headrest, with Recline, Vinyl, Fixed Lumbar

SEAT, TWO-MAN PASSENGER High Back with Integral Headrest in Outboard Position, Center Fold-Down Armrest with Storage, Vinyl, with Recline

SEAT, REAR BENCH, Vinyl

WINDOW, POWER (4) in Left and Right Doors, Front and Rear

FRAMES

FRAME RAILS High Strength Low Alloy Steel (50,000 PSI Yield), Straight Top Flange with Contoured Bottom, Height Transitions from 7.375" (187.325mm) to 9.125" (231.775mm) to 7.625" (193.675mm); Width: 3.079" (78.21mm); Thickness: 0.3125" (7.94mm); 383.3" (9735.8mm) Max OAL

Description

BUMPER EXTENSION, FRONT 4.0"

BUMPER, FRONT Contoured, Steel, Painted Black

SKID PLATE Steel, Frame Mounted, Protects the Transfer Case from the Ground

TOW HOOK, FRONT (2) Frame Mounted

AF RANGE 50" (128cm) Through and Including 75" (190cm)

LICENSE PLATE HOLDER Includes Upper & Lower Mounting Plate Hardware, Mounted in Existing Holes in Front Bumper

WHEELBASE RANGE 128" (325cm) Through and Including 183" (465cm)

BRAKES

BRAKE SYSTEM, HYDRAULIC {Bosch} Split System, with Four Channel ABS, Traction Control, Electronic Stability Control, Hydromax Brake Booster with High Speed Master Cylinder and Trailer Sway Control

BRAKE, PARKING {Bosch} DSSA Type, 12" x 3"; for Hydraulic Brake Chassis; Foot Operated in Cab; Differential Mounted

BRAKES, FRONT {Meritor Quadraulic} Hydraulic Disc Type, with Four 64mm Diameter Pistons, 8,000-lb Capacity

DUST SHIELDS, FRONT BRAKE for Hydraulic Brakes

BRAKES, REAR {Meritor Quadraulic} Hydraulic Disc Type, with Four 64mm Diameter Pistons, 15,500-lb Capacity per Axle

DUST SHIELDS, REAR BRAKE for Hydraulic Brakes

STEERING

STEERING GEAR {Bosch S2 8014 Plus} Power

STEERING COLUMN Tilting

STEERING WHEEL 4-Spoke; 15" Dia., Black

DRIVELINES

DRIVELINE SYSTEM {Dana Spicer} SPL100 Main Driveline, Direct Mount Transfer Case to Transmission, SPL70 Driveline to Front Axle, for 4x4

EXHAUST SYSTEMS

EXHAUST SYSTEM Horizontal Dual Aftertreatment System, Frame Mounted Under Right Rail, for Single Horizontal Tail Pipe

ENGINE EXHAUST BRAKE for International 6.6 Engine

MANUAL REGEN Capability

ELECTRICAL SYSTEMS

ELECTRICAL SYSTEM 12-Volt for CV Model

Includes
: HAZARD SWITCH Push On/Push Off, Located on Top of Steering Column Cover
: HEADLIGHT DIMMER SWITCH Integral with Turn Signal Lever
: PARKING LIGHT PARKING LIGHT Integral with Front Turn Signal and Rear Tail Light
: TURN SIGNALS, FRONT Includes Reflectors and Solid State Flashers; Flush Mounted
: WINDSHIELD WIPER SWITCH 2-Speed with Wash and Intermittent Feature, Integral with Turn Signal Lever

ALTERNATOR {Denso SC2} Brush Type, 12 Volt, 150 Amp Capacity

BACK-UP ALARM Electric, 102 dBA

Description

BATTERY BOX Steel, with Plastic Cover, 2 Battery Capacity, Parallel to Rail, 28" Wide, Mounted Left Side Under Cab

BATTERY SYSTEM {VARTA} Maintenance-Free, (2) 12-Volt 1300CCA Total, Top Threaded Stud

BODY BUILDER WIRING Back of Day Cab at Left Frame or Under Crew Cab at Left Frame; Includes One Sealed Connector for Separate Ground/Backup/Left and Right Hand Turn, Left and Right Hand Tail/Stop/Accessory Power and Combined for Left and Right Hand Stop/Turn

CAMERA SYSTEM, REAR VIEW Includes Camera, Mounting, Wiring and Interface to the Monitor, for the Back-up Camera System

CLEARANCE/MARKER LIGHTS (5) Amber LED Lights, Flush Mounted on Cab

HEADLIGHTS Halogen, Composite Aero Design, Black Trim Bezel, with Daytime Running Lights

HORN, ELECTRIC (1) Trumpet Style

RADIO AM/FM/USB Input/Auxiliary Input/SD Card Slot, with 4.2" Color Touch Panel Display

SPEAKERS (6)

STARTING MOTOR 12 Volt

STOP, TURN, TAIL & B/U LIGHTS Multi-Function, Sealed, Incandescent Stop, Turn and Tail Lights, Backup Lights with Rear Reflex Reflector, Includes License Plate Light

SWITCH, AUXILIARY 1 to 4 Latching Switches with 30-Amp Fuses

TRAILER BRAKE CONTROL Integrated

TRAILER CONNECTION SOCKET Mounted at Rear of Frame, Wired for Turn Signals Combined with Stop, Compatible with Trailers with Combined Stop, Tail, Turn Lamps

FRONT END

FRONT END Tilting, Fiberglass, with Three Piece Construction

BUG SCREEN Mounted Behind Grille

FENDER EXTENSIONS Painted

GRILLE Molded in Dark Gray

LOGOS EXTERIOR Model Badges

SPEEDOMETER, TOOLS, MISC

PAINT SCHEMATIC, PT-1 Single Color, Design 100

PAINT TYPE Base Coat/Clear Coat, 1-2 Tone

PROMOTIONAL PACKAGE Government Silver Package

GVWR WEIGHT CLASSIFICATION Class 5 (16,001-19,500 lbs)

SPECIAL RATING, GVWR Limited to 19,500-lb GVWR

FUEL TANKS

FUEL TANK Top Draw, Plastic, Rectangular, 17" Tank Depth, 40 US Gal (151L), Includes Auxiliary Draw Port and Fuel Filler Assembly, Mounted Between Frame Rails and Behind Rear Axle

DEF TANK 6.75 US Gal (26L) Capacity, Frame Mounted Outside Right Rail, Under Cab

WHEELS, TIRES - FRONT

Description
WHEELS, FRONT {Accuride 50180} DISC; 19.5x6.75 Rims, Powder Coat Steel, 4-Hand Hole, 8-Stud, 275mm BC, Hub-Piloted, Flanged Nut, with Steel Hubs

(2) TIRE, FRONT 225/70R19.5 Load Range G R02 PROFUEL STEER (PIRELLI), 646 rev/mile, 87 MPH, All-Position

WHEELS, TIRES - REAR

WHEELS, REAR {Accuride 50180} DUAL DISC; 19.5x6.75 Rims, Powder Coat Steel, 4-Hand Hole, 8-Stud, 275mm BC, Hub-Piloted, Flanged Nut, with Steel Hubs

(4) TIRE, REAR 225/70R19.5 Load Range G R02 PROFUEL DRIVE (PIRELLI), 643 rev/mile, 87 MPH, Drive

Services Section:

WARRANTY

WARRANTY Standard for CV515, Effective with Vehicles Built December 3, 2018 or Later, CTS-3000A

Knapheide 9' 6108D54 Utility Body,
Step Bumper,
Receiver hitch and plug,
4 corner LED amber/clear strobes,
Brooking mini light bar,
Ladder/material rack,
3000 watt inverter,
mud flaps

4

SUBJECT: PIGGYBACK SOURCEWELL CONTRACT #060920-NVS WITH NAVISTAR, INC (DBA) INTERNATIONAL TRUCK

BID #: PSC-0334-23

OPEN DATE: N/A

GENERAL GOVERNMENT AWARDS COMMITTEE

KIND AND BASIS OF CONTRACT: PIGGYBACK CONTRACT – DATE OF AWARD THROUGH AUGUST 1, 2024

AGENCY: FLEET MANAGEMENT

BASIS OF AWARD: PIGGYBACK CONTRACT

NUMBER OF BIDS INVITED: N/A **NUMBER RECEIVED:** N/A **OTHER:** N/A

SUMMARY OF BIDS AND RECOMMENDED ACTIONS:
Recommend approval to increase award with Navistar, Inc. (dba) International Truck through the authorized Florida distributor, Cumberland International Trucks of Florida, LLC, using Sourcewell Contract #060920-NVS for the purchase of (4) International MV607 chassis for the Jacksonville Fire & Rescue Department, in the amount of $29,207.31. Estimated annual expenditure amount not-to-exceed $435,769.57. Period of service is from date of award through August 1, 2024.

Funding shall be encumbered from account 51102.114001.564010.000000.00000499.00000.0000000 - executed by formal contract agreement through the Office of General Counsel and processed via Purchase Order(s).

ATTACHMENTS: Recommendation Memo; Supplier Quote, Previous Award, Contract

ANALYST: Corey Sidio

RESPECTFULLY SUBMITTED: DUSTIN FREEMAN, CHIEF PROCUREMENT DIVISION

CONCURRENCE BY: CRIS TONGOL, CHIEF, FLEET MANAGEMENT

(ALL AWARD ACTIONS SUBJECT TO LAWFULLY APPROPRIATED FUNDS)
ACTION OF GGAC COMMITTEE ON RECOMMENDATIONS ABOVE

MEMBERS APPROVING 3 MEMBERS DISAPPROVING 0 DATE: 4/20/2023

OTHER:

ACTION OF AWARDING AUTHORITY DATE 4/21/23

APPROVED ✓ DISAPPROVED

OTHER

SIGNATURE OF AUTHENTICATION

Brian Hughes
Chief Administrative Officer
~~For: Mayor Lenny Curry~~
Under Authority of:
Executive Order No: 2019-02

SUBJECT: PIGGYBACK SOURCEWELL CONTRACT #060920-NVS WITH NAVISTAR, INC (DBA) INTERNATIONAL TRUCK

BID #: PSC-0334-23

OPEN DATE: N/A

GENERAL GOVERNMENT AWARDS COMMITTEE

KIND AND BASIS OF CONTRACT: PIGGYBACK CONTRACT – DATE OF AWARD THROUGH AUGUST 1, 2024

AGENCY: FLEET MANAGEMENT

BASIS OF AWARD: PIGGYBACK CONTRACT

NUMBER OF BIDS INVITED: N/A **NUMBER RECEIVED:** N/A **OTHER:** N/A

SUMMARY OF BIDS AND RECOMMENDED ACTIONS:
Recommend approval to piggyback off Sourcewell Contract #060920-NVS with Navistar, Inc. (dba) International Truck, through the authorized Florida distributor, Cumberland International Trucks of Florida, LLC, for the purchase of International CV515 and MV607 chassis for the Jacksonville Fire & Rescue Department. Estimated annual expenditure amount not-to-exceed $406,562.26. Period of service will be from date of executed contract through August 1, 2024.

Funding shall be encumbered from account 51102.114001.564010.000000.00000499.00000.0000000 - executed by formal contract agreement through the Office of General Counsel and processed via Purchase Order(s).

ATTACHMENTS: Recommendation Memo; Risk Management Approval, Supplier Quote, Piggyback RFP & Contract

ANALYST: Corey Sidlo

RESPECTFULLY SUBMITTED: DUSTIN FREEMAN, CHIEF PROCUREMENT DIVISION

CONCURRENCE BY: CRIS TONGOL, CHIEF, FLEET MANAGEMENT

(ALL AWARD ACTIONS SUBJECT TO LAWFULLY APPROPRIATED FUNDS)
ACTION OF GGAC COMMITTEE ON RECOMMENDATIONS ABOVE

MEMBERS APPROVING 3 MEMBERS DISAPPROVING Ø DATE: 3/16/23

OTHER:

ACTION OF AWARDING AUTHORITY DATE 3/16/23

APPROVED ✓ DISAPPROVED

OTHER

SIGNATURE OF AUTHENTICATION

Brian Hughes
Chief Administrative Officer
For: Mayor Lenny Curry
Under Authority of:
Executive Order No: 2019-02

AGREEMENT
(UTILIZING SOURCEWELL CONTRACT #060920-NVS)
BETWEEN
THE CITY OF JACKSONVILLE
AND
NAVISTAR, INC. d/b/a INTERNATIONAL TRUCK
FOR
INTERNATIONAL CV515 AND MV607 CHASSIS FOR JFRD

THIS AGREEMENT for the purchase of International CV515 and MV607 chassis for the Jacksonville Fire and Rescue Department (the "Equipment") is made and entered into in duplicate effective as of the 18 day of April, 2023 (hereinafter the "Effective Date"), by and between the **CITY OF JACKSONVILLE**, a consolidated municipal corporation and political subdivision existing under the Constitution and laws of the State of Florida (hereinafter the "City"), and **NAVISTAR, INC. d/b/a INTERNATIONAL TRUCK**, a foreign profit corporation with principal office at 2701 Navistar Drive, Lisle, Illinois 60532 (hereinafter the "Contractor").

RECITALS:

WHEREAS, effective August 5, 2020, Sourcewell, Inc. entered into Sourcewell Contract #060920-NAV for Equipment with Contractor (hereinafter the "Sourcewell Contract"), attached hereto as Exhibit A and incorporated herein by this reference; and

WHEREAS, said Sourcewell Contract is in full force and effect until August 1, 2024 with a one-year renewal option, and has been competitively procured and awarded by Sourcewell as contracting authority according to law; and

WHEREAS, the Jacksonville Procurement Code, more particularly Section 126.211, *Ordinance Code*, authorizes and allows departments and agencies of City to use *inter alia* contracts of other governmental entities, including Sourcewell, which have been competitively procured and awarded; and

WHEREAS, the Sourcewell Contract is broad enough to allow City to procure the Equipment and Contractor has agreed to allow City to use the Sourcewell Contract; and

WHEREAS, it is in the best interests of the parties to use the Sourcewell Contract for procurement of the Equipment and to add those contractual provisions City is required to use by ordinance or policy; now therefore

IN CONSIDERATION of the premises and of the mutual covenants and agreements hereinafter contained and of other good and valuable consideration acknowledged by the parties to be sufficient, the

parties agree as follows:

ARTICLE 1: Incorporation of Recitals

The above-stated recitals are accurate, true, and correct and are made a part hereof and are incorporated herein by this reference.

ARTICLE 2: Engagement of Contractor

City hereby engages Contractor and Contractor hereby accepts said engagement for the purpose of providing to City the Equipment according to the provisions of the Sourcewell Contract and its exhibits, amendments, equipment descriptions, and quotations, attached hereto as Exhibit A. The provisions, terms, and conditions of the Sourcewell Contract shall apply unless specifically preempted herein. Therefore, any conflict between the provisions of this Agreement and those in the Sourcewell Contract shall be resolved in favor of this Agreement, but only to the extent of any conflict.

ARTICLE 3: Coordination and Equipment Provided by CITY

City shall designate for the procurement of the Equipment a Project Coordinator who will, on behalf of City, coordinate with Contractor and administer this Agreement according to the terms and conditions contained herein and in the exhibits attached hereto and made a part hereof. It shall be the responsibility of Contractor to coordinate procurement of the Equipment with the designated Project Coordinator. City's designated Project Coordinator shall be Erik Preacher (Phone: 904-255-7434; ErikP@coj.net).

ARTICLE 4: Duration of Agreement/Pricing Available to Other Entities

The term of this Agreement shall commence on the Effective Date and shall continue and remain in full force and effect as to all its terms, conditions, and provisions as set forth herein through August 1, 2024, unless sooner terminated as provided in Exhibit A. During said period of time, the Equipment pricing provided hereunder shall be available to all using agencies and other political subdivisions, boards, agencies, or authorities existing in Duval County that may desire to procure the same at the contract prices provided herein.

ARTICLE 5: Payments for Equipment of Contractor

5.1. On the faithful performance of this Agreement by Contractor, City will pay Contractor in accordance with the terms and conditions stated in the Sourcewell Contract.

5.2. Notwithstanding any contrary provision in Exhibit A, the maximum indebtedness of City for all fees, reimbursable items, or other costs for the Equipment sold by Contractor to City pursuant to this Agreement shall not exceed the sum of FOUR HUNDRED SIX THOUSAND FIVE HUNDRED SIXTY-TWO AND 26/100 USD ($406,562.26), subject to the availability of lawfully appropriated funds; *provided however*, the above-stated amount will not be encumbered by this Contract. Instead, it will be encumbered in

whole or in part by subsequently issued purchase orders for individual projects to be competitively bid. Such purchase orders shall be binding upon the parties hereto and must incorporate the provisions of this Contract. All funds control checking shall be made and performed at the time such purchase orders are issued.

ARTICLE 6: Notice

Notice to CITY under this Agreement shall be delivered by certified mail, return receipt requested, or by other delivery with receipt to the following:

Erik Preacher, Fleet Management Administrator
2581 Commonwealth Avenue
Jacksonville, Florida 32254

Notice to Contractor under this Agreement shall be delivered by certified mail, return receipt requested, or by other delivery with receipt to the following:

Martin White, Director, Vocational Sales
Navistar, Inc.
2701 Navistar Drive
Lisle, Illinois 60532

ARTICLE 7: Indemnity

Contractor shall indemnify City as set forth in Exhibit B.

ARTICLE 8: Insurance

Contractor shall procure and maintain the insurance coverages set forth in Exhibit C.

ARTICLE 9: Laws, Ordinances, Rules, and Regulations

As required by Section 126.108(b), *Ordinance Code*, in providing the Equipment, Contractor must comply with any and all applicable federal, state, and local laws, rules, regulations, and ordinances, as the same exist and may be amended from time to time. Such laws, rules, regulations, and ordinances shall include, but are not limited to, Chapter 119, Florida Statutes (the Florida Public Records Law), and Section 286.011, Florida Statutes (the Florida Sunshine Law), as they apply to the purchases contemplated in this Agreement. If any of the obligations of this Agreement are to be performed by a subcontractor, the provisions of this Article 9 shall be incorporated into and become a part of the subcontract.

ARTICLE 10: Nondiscrimination

Contractor represents that it has adopted and will maintain throughout the term of this Agreement a policy of nondiscrimination and nonharassment against any person with regard to race, color, sex (including pregnancy), sexual orientation, gender identity or expression, religion, political affiliation, national origin, disability, age, marital status, veteran status, or any other impermissible factor in recruitment, hiring, compensation, training, placement, promotion, discipline, demotion, transfer, layoff, recall, termination,

working conditions, and related terms and conditions of employment. Contractor agrees that on written request, it will permit reasonable access to its records of employment, employment advertisement, application forms, and other pertinent data and records by the Executive Director of the Community Relations Commission or successor agency or commission for the purpose of investigation to ascertain compliance with the nondiscrimination provisions of this Contract; provided, however, that Contractor shall not be required to produce for inspection records covering periods of time more than one (1) year prior to the Effective Date. Contractor agrees that if any of the services to be provided pursuant to this Contract are to be performed by a subcontractor, the provisions of this Article 10 shall be incorporated into and become a part of the subcontract.

ARTICLE 11: Conflict of Interest

The parties will follow the provisions of Section 126.112, *Ordinance Code*, with respect to required disclosures by public officials who have or acquire a financial interest in a bid or contract with City, to the extent the parties are aware of the same.

ARTICLE 12: Governing State Law/Severability/Venue

The rights, obligations, and remedies of the parties as specified under this Agreement shall be interpreted and governed in all aspects by the laws of the State of Florida. Should any provision of this Agreement be determined by the courts to be illegal or in conflict with any law of the State of Florida, the validity of the remaining provisions shall not be impaired. Venue for litigation of this Agreement shall be in courts of competent jurisdiction located in Jacksonville, Duval County, Florida.

ARTICLE 13: Counterparts

The parties agree that for the execution of this Agreement, time is of the essence. Therefore, this Agreement and all amendments hereto may be executed in several counterparts, each of which shall be deemed an original, and all of such counterparts together shall constitute one and the same instrument. The parties further agree that facsimile ("fax") transmission of all signatures with originals to follow shall constitute and be evidence of an executed Agreement.

ARTICLE 14: Public Records

In accordance with Section 119.0701, Florida Statutes, the Contractor shall:

13.1. Keep and maintain public records required by City to perform the Equipment; and

13.2. Upon request from City's custodian of public records, provide City with a copy of the requested records or allow records to be inspected or copied within a reasonable time at a cost that does not exceed the cost provided for in Chapter 119, Florida Statutes, or as otherwise provided by law; and

13.3. Ensure that public records that are exempt or confidential and exempt from public records disclosure requirements are not disclosed except as authorized by law for the duration of the Agreement term and following completion of this Agreement if Contractor does not transfer the records to City; and

13.4. Upon completion of this Agreement, transfer to City at no cost all public records in possession of Contractor or keep and maintain public records required by City to perform the Equipment. If Contractor transfers all public records to City upon completion of this Agreement, Contractor shall destroy any duplicate public records that are exempt or confidential and exempt from public records disclosure requirements. If Contractor keeps and maintains public records upon completion of this Agreement, Contractor shall meet all applicable requirements for retaining public records. All records stored electronically must be provided to City upon request from City's custodian of public records in a format that is compatible with City's information technology systems.

The above requirements apply to a "Contractor" as defined in Section 119.0701, Florida Statutes.

IF CONTRACTOR HAS QUESTIONS REGARDING THE APPLICATION OF CHAPTER 119, FLORIDA STATUTES, TO THE CONTRACTOR'S DUTY TO PROVIDE PUBLIC RECORDS RELATING TO THIS CONTRACT, CONTACT THE CITY'S CUSTODIAN OF PUBLIC RECORDS AT (904) 630-7678; PRR@COJ.NET; CITY OF JACKSONVILLE, PUBLIC RECORDS REQUEST, 214 N. HOGAN STREET, SUITE 1180, JACKSONVILLE, FLORIDA 32202.

[Remainder of page left blank intentionally. Signature page follows immediately.]

IN WITNESS WHEREOF, the parties hereto have executed this Agreement the day and year first above written.

ATTEST:

By_____
James R. McCain, Jr.
Corporation Secretary

CITY OF JACKSONVILLE:

By_____
Lenny Curry, Mayor

Brian Hughes
Chief Administrative Officer
For: Mayor Lenny Curry
Under Authority of:
Executive Order No: 2019-02

WITNESS:

By_____
Signature

Falan Abraham
Type/Print Name

Administrator
Title

NAVISTAR, INC. d/b/a INTERNATIONAL TRUCKS

By_____
Signature

Michael O'Brien
Type/Print Name

Fleet Sales
Title

Encumbrance and funding information for internal City use:

Account: 51102.114001.564010.000000.00000499.00000.0000000
Amount: $406,562.26

TOTAL MAXIMUM INDEBTEDNESS: $406,562.26

In accordance with Section 24.103(c), *Ordinance Code*, I do hereby certify that there is an unexpended, unencumbered, and unimpounded balance in the appropriation sufficient to cover the foregoing agreement.

Director of Finance
City Contract No. 70332-23

Approved as to form:

Office of General Counsel