8

SUBJECT: 7th STREET DRAINAGE IMPROVEMENTS

BID #: CP-0152-22 **OPEN DATE:** 10/12/22

GENERAL GOVERNMENT AWARDS COMMITTEE

KIND AND BASIS OF CONTRACT: CONSTRUCTION SERVICE – FROM DATE OF AWARD UNTIL COMPLETION

AGENCY: PUBLIC WORKS

BASIS OF AWARD: LOWEST RESPONSIVE, RESPONSIBLE BIDDER- BY GROUP

NUMBER OF BIDS INVITED: 39 NUMBER RECEIVED: 3 OTHER: 0

SUMMARY OF BIDS AND RECOMMENDED ACTIONS:
Recommend approval of change order #1 to the agreement with Callaway Contracting, Inc. (contract number 70089-23) for unforeseen conditions, plan revisions, and pay item overruns in the amount of $211,719.14. Total expenditure amount not to exceed $2,033,979.32. Period of service will be an additional 219 days from notice to proceed.

Funding Source: change order #1 to be encumbered via multiple accounts. To be execute by formal change order through Office of General Counsel

Attachments: Recommendation Memo, Change order #1, Previous award

Analyst: BENJAMIN KEMP **RESPECTFULLY SUBMITTED:** DUSTIN FREEMAN, CHIEF PROCUREMENT DIVISION

CONCURRENCE BY: Nina Sickler, P.E., Director of Public Works

(ALL AWARD ACTIONS SUBJECT TO LAWFULLY APPROPRIATED FUNDS)
ACTION OF GGAC COMMITTEE ON RECOMMENDATIONS ABOVE

MEMBERS APPROVING _____ MEMBERS DISAPPROVING _____ DATE: _____

_____ _____ OTHER: _____

_____ _____

_____ _____

ACTION OF AWARDING AUTHORITY DATE _____

APPROVED _____ DISAPPROVED _____

OTHER _____

SIGNATURE OF AUTHENTICATION _____

DocuSign Envelope ID: DF316DC0-98D5-4229-B83F-419C0BD36770

City of Jacksonville, Florida

Donna Deegan, Mayor

Department of Public Works
Engineering & Construction Management Division
214 N. Hogan Street, 10th Floor
Jacksonville, FL 32202
(904) 255-8762
Jacksonville.gov

A NEW DAY

May 22, 2024

TO: Dustin Freeman
Chief of Procurement

THRU: Nina Sickler, P.E. DocuSigned by: Nina Sickler 1EFA223D5D23487
Director of Public Works

FROM: Sheldon D. Gibbs, P.E. DocuSigned by: Sheldon D. Gibbs, P.E. 843DE274A6A74CA...
Acting Chief, Engineering & Construction Management

Thomas G. McKnight DocuSigned by: Thomas G. McKnight 1DF294DF338E407...
Capital Improvement Construction Manager

SUBJECT: Change Order #1 Contract #70089-23/ PO #654436-23 Bid #CP-0152-22
Callaway Contracting, Inc.
7th Street Drainage Improvements

The subject contract was awarded under BID #CP-0152-22 in the amount of $1,822,260.18 to Callaway Contracting, Inc., Contract #70089-23/PO #654436-23. Change Order #1 is detailed on the attached worksheet in the amount of $211,719.14.

Accordingly, this is to recommend approval for Change Order #1 for 7th Street Drainage Improvements in the amount of $211,719.14. The maximum indebtedness will be $2,033,979.32.

Funding for the change order to be encumbered as follows:

Account	TOTAL
See attached	$211,719.14

SDG/lw

Attachments

cc: Fred Sumter, Engineering and Construction Management

DocuSign Envelope ID: DF316DC0-98D5-4229-B83F-419C0BD36770

CITY OF JACKSONVILLE
DEPARTMENT OF PUBLIC WORKS
ENGINEERING DIVISION
CONSTRUCTION CHANGE ORDER

Change Order No. One (1) Date May 22, 2024

Description of Project 7th St. Drainage Improvements

Name of Contractor Callaway Contracting, Inc.

Contractor's Address 10950 New Berlin Road, Jacksonville, FL 32226

Contract No. 70089-23/ PO 654436-23

Account No. See attached Original Contract $1,822,260.18

+ Previous Change Order 0 $0.00 + Change Order No. 1 $211,719.14

*See attached appendix for additional listings.

TOTAL REVISED CONTRACT $2,033,979.32

Bid Number CP-0152-22

Construction Completion Date December 18, 2023

Revised Construction Completion Date July 24, 2024

Contract Expiration Date April 16, 2024

Revised Contract Expiration Date Project Completion

In compliance with General Conditions of above-referenced contract, CONTRACTOR and OWNER do both hereby agree that the CONTRACTOR shall make the following changes, additions or deletions to the Work specified in the plans and specifications: See attached. Add 219 non-compensable calendar days for construction completion and contract expiration dates.

Justification: See attached.

The Issuing Authority has looked over cost and pricing data for this change order and has determined that this change order is necessary and all costs are reasonable.

Accepted for Contractor Callaway Contracting, Inc.

Signed _____ Attest _____

Title _____ Title _____

Date _____ Date _____

Signed Engineering & Construction Mgmnt Div. By _____
Issuing Authority — Thomas G. McKnight. Capital Improvement Construction Manager — Date

Signed Right of Way and Stormwater Maintenance By _____
Using Division — Div/Department Head — Date

Chief, Engineering & Construction Mgmt Div Date — Assistant Counsel Date

Director of Public Works Date — Mayor Date

Chief of Procurement Date — Corporation Secretary Date

Director of Finance Date

ATTACHMENT "A"
ACCOUNT NUMBERS
7th STREET DRAINAGE IMPROVEMENTS

ACCOUNT NO.	32111.153101.565051.010386.00.00.00	32124.153119.565051.010386.00.00.00	44102.153004.565050.010386.00.00.00	44102.153004.565050.001031.00.00.00	Contract Totals
PO #	654436-23	654436-23	Task 3 / 44102-381920	Task 9/ 44102-381920	
original contract	$1,258,369.39	$563,890.79	$0.00	$0.00	$1,822,260.18
change order #1	$0.00	$117,568.88	$25,000.00	$69,150.26	$211,719.14
Account Totals	$1,258,369.39	$681,459.67	$25,000.00	$69,150.26	$2,033,979.32

DocuSign Envelope ID: DF316DC0-98D5-4229-B83F-419C0BD36770

CALLAWAY CONTRACTING, INC.
7TH STREET DRAINAGE IMPROVEMENTS
CONTRACT NO. 70089-23

CHANGE ORDER NO. 01
5/8/24

NBR	MASTER ITEM DESCRIPTION	QUANTITY	UOM	UNIT COST	NET ADDITION	NET DELETION	TOTALS
	UNFORESEEN CONDITIONS						
1	UNFORESEEN CONCRETE PAVEMENT ROADWAY DEMOLITION & FULL DEPTH ROADWAY RECONSTRUCTION						
	REMOVAL OF CONCRETE PAVEMENT UNDER ASPHALT PAVEMENT	1541.280	SY	$25.80	$39,765.02		
	REMOVAL OF ADDITIONAL THICKNESS ASPHALT	959.470	SY	$11.36	$10,899.58		
	1.5" ASPHALT PAVING	-926.780	SY	$19.94		($18,479.99)	
	1.5" ASPHALT MILLING	-1483.170	SY	$6.50		($9,640.61)	
	6" LIMEROCK BASE	444.390	SY	$24.78	$11,011.98		
	12" STABILIZED SUBGRADE	778.120	SY	$11.37	$8,847.22		
	ADDITIONAL ASPHALT PAVING MOBILIZATIONS	2.000	EA	$3,200.00	$6,400.00		
	COJ HEADER CURB	698.500	LF	$58.50	$40,862.25		
	6" CONCRETE DRIVEWAY REMOVAL	143.900	SY	$25.80	$3,712.62		
	6" CONCRETE DRIVEWAY REPLACEMENT	143.900	SY	$153.50	$22,088.65		
	SOD	750.000	SY	$9.34	$7,005.00		
	TIME EXTENSION	200.000	DAYS				
	NET TOTAL						**$122,471.73**

JUSTIFICATION: When the existing roadway pavement was removed for the planned drainage pipe installation on 7th Street at Boulevard Street, concrete pavement was discovered below the asphalt. The existing concrete pavement wasn't shown in the project plans or geotechnical borings. The CEI had the roadway cored throughout the project limits and determined the concrete pavement was present on 7th Street from Boulevard Street to the east side of the Pearl Street Intersection. The project plans originally included reconstructing the road with a conventional asphalt pavement section within the drainage installation limits. As documented in RFI #2, it was determined the concrete pavement needed to be removed to prevent differential settlement and pavement cracking between dissimilar pavement sections. As a result, the project's planned roadway reconstruction work was expanded to encompasses the entire limits of the existing concrete pavement. New unit prices were established for the Removal of Concrete Pavement, Removal of Additional Thickness Asphalt, and 6" Thick Concrete Driveway Removal & Replacement Pay Items. Other existing roadway construction related pay item work quantities are being increased for the expanded full depth roadway reconstruction limits. A work quantity reduction in the original planned 1.5" Asphalt Milling & Paving Pay Items will occur in conjunction with the increase in the full depth roadway reconstruction. The contractor is to be provided a 200-day noncompensible time extension for the performance of this work due to it affecting critical path work activities. This time extension amount includes and was largely due to the JEA gravity sewer main replacement work that was added to the project, which also expanded the full depth road reconstruction limits.

2	SEWER LATERAL CONFLICT WITH DRAINAGE PIPE						
	FDOH BUILDING SEWER LATERAL RELOCATION/REPLACEMENT	1.000	LS		$56,260.60		
	EXISTING DRAINAGE PIPE LINER REPAIR	1.000	LS		$7,505.00		
	TIME EXTENSION	19.000	DAYS				
	NET TOTAL						**$63,765.60**

JUSTIFICATION: During the installation of the 42" RCP Drainage Pipe at STA 12+80, the existing 8" sewer service lateral piping from the adjacent FDOH building was found to be in direct conflict with the drainage pipe. The sewer service lateral piping was shown in the project plans, but the elevation shown wasn't correct. As documented in RFI #1, it was determined that the sewer service lateral piping had to be removed and relocated to resolve the conflict and achieve the required pipe separations. The contractor is to be compensated for removing the existing service pipe and replacing it with new 8" PVC DR-18 pipe and fittings for the relocation, as described in RFI #1, and all the associated work. The contractor is to be compensated for temporarily removing, replacing, and repairing the liner by chemical grout injection in the existing 18" drainage pipe to facilitate this work. The contractor is also to be compensated for providing bypass pumping during the work to maintain sewer flow from the FDOH building. The contractor is to be provided a 19-day noncompensible time extension for the performance of this work due to it affecting critical path work activities.

TOTAL UNFORESEEN CONDITIONS **$186,237.33**

PLAN REVISIONS

1 PLAN REVISION NO. 1 - ROADWAY PROFILE & DRAINAGE CHANGES

CITY STD CURB INLET	2.000	EA	$7,479.88	$14,959.76	
15" RCP DRAINAGE PIPE	29.000	LF	$98.72	$2,862.88	
VMS BOARDS	28.000	ED	$18.00	$504.00	
NET TOTAL					**$18,326.64**

JUSTIFICATION: In response to RFI No. 8, the EOR provided a plan revision with a new roadway vertical profile for the expanded full depth roadway construction area on 7th Street from Boulevard Street to Pearl Street. In conjunction with the new roadway vertical profile, the EOR added two curb inlets and drainage piping at apporx. STA 20+40 (LT & RT) to promote drainage. The existing City Standard Curb Inlet and 15" RCP Drainage Pipe Pay Item work quantities are being increased for the added installations. The VMS boards were requested by COJ traffic engineering to be in place prior to the start of construction and not included in the contract bid.

TOTAL PLAN REVISIONS **$18,326.64**

BID PAY ITEM OVERRUNS

1 BID PAY ITEM OVERRUNS - APPROVED OVERRUNS

CURE IN PLACE PIPE (CIPP)	22.000	LF	$237.48	$5,224.56	
8" CONCRETE PAVEMENT	11.000	SY	$175.51	$1,930.61	
NET TOTAL					**$7,155.17**

JUSTIFICATION: The contract plans indicate a 24" brick storm drain to be re-lined as part of the contract via a cast-in-place-pipe (CIPP) liner. Upon completing the lining work, it was discovered that there was a discrepancy between the plan quantity called out and the bid quantity in the contract. The Contractor installed a total of 460 LF of CIPP liner within 24" brick pipe (verified by CCTV) while the bid only contains 438 LF. The 8" Concrete Pavement located within the FDOH parking lot was disturbed as part of the standard construction operations. To eliminate tripping hazards, the concrete pavement was extended to a uniform shape to assist with transitioning from ADA parking to standard parking. The existing CIPP Liner and 8" Concrete Pavement Pay Item work quantities are being increased for the added installations.

TOTAL PAY ITEM OVERRUNS **$7,155.17**

SUBTOTAL CHANGE ORDER NO. 1	**$239,839.74**	**($28,120.60)**	
NET TOTAL CHANGE ORDER NO. 1			**$211,719.14**
TOTAL TIME EXTENSION		219.000	**DAYS**

Nathan Pearson

From: Jim <jim@callawaycontracting.com>
Sent: Thursday, May 2, 2024 2:15 PM
To: Nathan Pearson; Bobby
Cc: Reid Harriett; Landra Draper
Subject: RE: Proposed Gravity Sewer Lateral Estimate; 7th Street Drainage Improvements (COJ Contract No. 70089-23)

Nathan,

It looks all there to me.

I appreciate your work on this.

Thank you,

Jim

From: Nathan Pearson <npearson@via-cs.com>
Sent: Wednesday, May 1, 2024 5:14 PM
To: Jim <jim@callawaycontracting.com>; Bobby <bobby@callawaycontracting.com>
Cc: Reid Harriett <rharriett@via-cs.com>; Landra Draper <ldraper@via-cs.com>
Subject: RE: Proposed Gravity Sewer Lateral Estimate; 7th Street Drainage Improvements (COJ Contract No. 70089-23)
Importance: High

Jim,

Thank you for that. I have finalized the Change Order draft and although we do not typically provide it for review, I wanted to offer you the opportunity to review it and concur before we send it over to the City for processing. Please review the attached and let us know if you concur by COB Friday 5/3 please. Let myself or Reid know if there are any major issues that you see.

Thank you,

Nathan Pearson
Project Administrator
VIA Consulting Services, Inc. (DBE)
10250 Normandy Blvd, Suite 304
Jacksonville, FL, 32221
(904) 783-9842 (office)
(904) 859-6617 (mobile)

VIA CONSULTING SERVICES, INC.

http://www.via-cs.com
http://www.facebook.com/VIAcsinc

From: Jim <jim@callawaycontracting.com>
Sent: Wednesday, May 1, 2024 9:39 AM
To: Nathan Pearson <npearson@via-cs.com>; Bobby <bobby@callawaycontracting.com>
Cc: Reid Harriett <rharriett@via-cs.com>; Landra Draper <ldraper@via-cs.com>
Subject: RE: Proposed Gravity Sewer Lateral Estimate; 7th Street Drainage Improvements (COJ Contract No. 70089-23)

Nathan,

I will agree to this so that we can move on with the CO process.

Thank you,

Jim

From: Nathan Pearson <npearson@via-cs.com>
Sent: Tuesday, April 30, 2024 1:19 PM
To: Bobby <bobby@callawaycontracting.com>; Jim <jim@callawaycontracting.com>
Cc: Reid Harriett <rharriett@via-cs.com>; Landra Draper <ldraper@via-cs.com>
Subject: RE: Proposed Gravity Sewer Lateral Estimate; 7th Street Drainage Improvements (COJ Contract No. 70089-23)

Bobby/Jim,

Can you provide us an update on this item?

Thanks,

Nathan Pearson
Project Administrator
VIA Consulting Services, Inc. (DBE)
10250 Normandy Blvd, Suite 304
Jacksonville, FL, 32221
(904) 783-9842 (office)
(904) 859-6617 (mobile)

VIA CS
VIA CONSULTING SERVICES, INC.

http://www.via-cs.com
http://www.facebook.com/VIAcsinc

From: Nathan Pearson
Sent: Wednesday, April 24, 2024 11:19 AM
To: Bobby Walker <bobby@callawaycontracting.com>; Jim Callaway <jim@callawaycontracting.com>

Cc: Reid Harriett (rharriett@via-cs.com) <rharriett@via-cs.com>; Landra Draper <ldraper@via-cs.com>
Subject: Proposed Gravity Sewer Lateral Estimate; 7th Street Drainage Improvements (COJ Contract No. 70089-23)

Bobby/Jim,

I provided the hard-copy of this to Bobby on Friday at our progress meeting. Based on the numbers that Sunbelt provided, I've put together what I believe I can justify to the City for the sewer lateral work. In comparison of this estimate to your submitted invoice, the value of the estimate is within about $4,200 of the submitted costs (when corrected to meet the specifications). I've done everything I can when it comes to justification of costs that Sunbelt has submitted but their poor record submittals don't help any of us in this. The City is awaiting the final CO for this project to execute some contract value increases where needed so we need to get this resolved this week. Please take a look and let us know if you guys concur with the Estimate value.

Thank you,

Nathan Pearson
Project Administrator
VIA Consulting Services, Inc. (DBE)
10250 Normandy Blvd, Suite 304
Jacksonville, FL, 32221
(904) 783-9842 (office)
(904) 859-6617 (mobile)

VIA CONSULTING SERVICES, INC.
http://www.via-cs.com
http://www.facebook.com/VIAcsinc

DocuSign Envelope ID: DF316DC0-98D5-4229-B83F-419C0BD36770

BREAK PAGE

UNFORESEEN CONDITIONS 01 - FULL DEPTH ROADWAY RECONSTRUCTION

Project: 7th Street Drainage Improvements
COJ Contract No. 70089-23
Subject: 7th Street Full-Depth Reconstruction Changes

COST ESTIMATE TO REMOVE CONCRETE PAVEMENT AND FULLY RECONSTRUCT ROADWAY

							COJ & JEA Road Reconstruction Cost Allocations				
Pay Item Description	**Unit**	**Unit Price**	**Original Qty.**	**Cost Amount**	**Revised Takeoff Qty.**	**Cost Amount**	**COJ Quantity**	**Cost Amount**	**JEA Quantity**	**Cost Amount**	**Comments**
Asphalt Paving (1.5" Avg Depth)	SY	$ 19.94	5008	$ 99,859.52	5507.21	$ 109,813.77	4081.22	$ 81,379.53	1425.99	$ 28,434.24	Excluded the roundabout area at Pearl St and the area of 7 Drainage Manhole R&C. It appears the FDOH parking lot asphalt repair may not be included in the original plan quantity. This potential plan quantity error will need to be confirmed with the EOR.
Asphalt Milling (1.5" Avg Depth)	SY	$ 6.50	2783	$ 18,089.50	1299.83	$ 8,448.90	1299.83	$ 8,448.90		$ -	Take-off value of anticipated final milling quantity for 3rd Block (Pearl to Silver).
6" Limerock Base	SY	$ 24.78	2337	$ 57,910.86	4207.38	$ 104,258.88	2781.39	$ 68,922.84	1425.99	$ 35,336.03	
12" Stabilized Subgrade (Blocks 1 & 2)	SY	$ 11.37	2450	$ 27,856.50	4654.11	$ 52,917.23	3228.12	$ 36,703.72	1425.99	$ 16,213.51	Quantity includes curb pad area.
Removal of Existing Concrete	SY	$ 25.80	0	$ -	2967.27	$ 76,555.57	1541.28	$ 39,765.02	1425.99	$ 36,790.54	Assumes the concrete pavement is encountered through the intersection of Pearl St. and 7th Street. The cores taken on 8/25/23 did not have any concrete encountered east of that intersection. This cost includes the removal of additional asphalt thickness discovered in the first 2 blocks (4" vs 1.5").
Asphalt Paving Mobilizations	LS	$ 3,200.00	0		2	$ 6,400.00	2	$ 6,400.00			Two additional paving mobilizations are expected for a block by block full reconstruction.
Additional Asphalt Depth Removal (3rd Block)	SY	$ 11.36	0		959.47	$ 10,899.58	959.47	$ 10,899.58			Additional depth asphalt discovered in cores through 3rd block (4" vs. 1.5").
City Standard Curb & Gutter (Blocks 1 & 2)	LF	$ 58.50	335	$ 23,362.55	1397	$ 81,724.50	698.5	$ 40,862.25	698.5	$ 40,862.25	Assuming City Std. Curb is chosen as the replacement. COJ Header Curb is same price per Contractor.
Partial Concrete Driveway Removal (Blocks 1 & 2)	SY	$ 25.80			287.8	$ 7,425.24	143.9	$ 3,712.62	143.9	$ 3,712.62	Rough field measurement of 185 LF of driveways. Assumed 14' wide repair from curb line to sidewalk.
Partial Concrete Driveway Reconstruction (Blocks 1 & 2)	SY	$ 153.50			287.8	$ 44,177.30	143.9	$ 22,088.65	143.9	$ 22,088.65	Rough field measurement of 185 LF of driveways. Assumed 14' wide repair from curb line to sidewalk. Unit price is an interpolation of 4" & 8" unit prices in the contract. A new unit price for 6" thick driveway reconstruction will need to be requested from the Contractor.
OPTIONAL ADDITIONAL WORK TO BE DETERMINED BY COJ											
City Standard Curb & Gutter (Block 3)	LF	$ 58.50			606	$ 35,451.00	606	$ 35,451.00		$ -	
TOTAL COSTS w/o OPTIONAL WORK			**Original Cost**	**$ 227,078.93**	**Revised Total**	$ 451,018.41	**COJ Total**	$ 319,183.11	**JEA Total**	$ 157,636.57	
TOTAL COSTS with OPTIONAL WORK			**Original Cost**	**$ 227,078.93**	**Revised Total**	$ 538,071.95	**COJ Total**	$ 354,634.11	**JEA Total**	$ 183,437.84	

Estimate Notes & Assumptions: This estimate assumes concrete pavement is present from Boulevard St. to Pearl Street across the full width of the road based on recent pavement coring. This estimates assumes the COJ & EOR will utilize the current project plan's pavement section for full roadway reconstruction to replace the concrete pavement. This cost estimate assumes the COJ will be responsible for fully reconstructing the north lane (drainage trench line) and various trench line cross cuts and JEA will be responsible for fully reconstructing the south lane (sewer trench line). This estimate does not include full driveway removal and replacement. Partial driveway removal and replacment may be necessary to match the new curb lines and road profile.

DocuSign Envelope ID: DF316DC0-98D5-4229-B83F-419C0BD36770

DocuSign Envelope ID: DF316DC0-98D5-4229-B83F-419C0BD36770

Nathan Pearson

From: Jim <jim@callawaycontracting.com>
Sent: Wednesday, January 24, 2024 3:55 PM
To: Reid Harriett
Cc: Bobby; Nathan Pearson; Frederick Sumter (FSumter@coj.net); Landra Draper; barbmr@jea.com; Zastrocky, Ashlee R
Subject: RE: Cost Estimate & Sharing Proposal - Concrete Removal & Road Reconstruction ; 7th Street Drainage Improvements (COJ Contract No. 70089-23)

Reid,

I had forgotten to reply to this.

We take no issue with any of this and accept the JEA/COJ cost split for these items and your proposed pricing for the 6" concrete.

Thank you,

Jim

From: Reid Harriett <rharriett@via-cs.com>
Sent: Monday, November 27, 2023 2:45 PM
To: Jim <jim@callawaycontracting.com>
Cc: Bobby <bobby@callawaycontracting.com>; Nathan Pearson <npearson@via-cs.com>; Frederick Sumter (FSumter@coj.net) <FSumter@coj.net>; Landra Draper <ldraper@via-cs.com>; barbmr@jea.com; Zastrocky, Ashlee R <zastar@jea.com>
Subject: Cost Estimate & Sharing Proposal - Concrete Removal & Road Reconstruction ; 7th Street Drainage Improvements (COJ Contract No. 70089-23)

Good afternoon Jim,

As a follow up to our concrete removal and road reconstruction discussions in RFI No. 2, we developed the attached engineer's cost estimate and cost sharing proposal for the COJ's & JEA's review. The cost estimate was based on plan takeoff quantities (attached) and price proposals recently received from Callaway. The engineer's estimate was intended to provide a rough estimate of the additional costs for the COJ's & JEA's review and cost sharing discussion. The COJ & JEA have since accepted the cost sharing proposal. The COJ will take cost responsibility for the road reconstruction along the drainage pipe trench line (predominately north lane), and JEA will take cost responsibility for the sewer pipe trench line (predominately south lane) through the limits of the existing concrete pavement, as shown in the plan takeoff. It's understood that the final pay quantities will be based on the installed work item quantities. We do need for Callaway to provide a unit price for possible 6" thick concrete driveway reconstruction, as the unit price in the estimate (red) was an interpolation of the contract's 4" thick concrete sidewalk and 8" thick concrete pavement items. Please provide that at your earliest convenience.

Please review the cost estimate and sharing proposal and let us know if Callaway has any concerns. JEA has asked if Callaway would be willing to accept the respective pay item unit prices for their portion of the roadway reconstruction costs to keep the quantity tracking and methods of payment consistent between the COJ & JEA projects. Please let us know if Callaway is agreeable to that payment method approach for JEA's portion of that work.

If you have any questions, please let us know.

DocuSign Envelope ID: DF316DC0-98D5-4229-B83F-419C0BD36770

Thanks,

Reid Harriett, P.E.
Senior Project Engineer
VIA Consulting Services, Inc.
rharriett@via-cs.com
(904)-451-7254 (Mobile)

Corporate Office
10250 Normandy Blvd., Suite 304
Jacksonville, Florida 32221
(904) 783-9842 (office)

SR-23 FCE Field Office
1421 South Orange Ave.
Green Cove Springs, Florida 32043
(904)-901-0800 (office)

DocuSign Envelope ID: DF316DC0-98D5-4229-B83F-419C0BD36770

Nathan Pearson

From:	Nathan Pearson
Sent:	Tuesday, August 29, 2023 3:27 PM
To:	Sumter, Frederick; Baxter, John
Cc:	Reid Harriett; Landra Draper
Subject:	RFI #02 - Concrete Pavement Encountered Under Asphalt; 7th Street Drainage Improvements (COJ Contract No. 70089-23)
Attachments:	Existing Roadway Core Information - 7th Street.xlsx

Fred/John,

As a follow up to our recent discussion about the potential existing concrete pavement below the asphalt pavement on 7th Street. Last week, Callaway submitted an RFI concerning some concrete located underneath the asphalt pavement at the Boulevard Street intersection as well as on 7th Street just east of that intersection. Upon further investigation, the presence of concrete under the asphalt appeared to extend through a majority of the project limits. With the COJ's concurrence, we tasked our QC firm to cut roadway cores along 7th Street to determine the extent of the concrete. Concrete pavement was found from the Boulevard St. & 7th Street Intersection to the east side of the Pearl Street & 7th Street Intersection in both travel lanes and at varying thicknesses from 5" to 6.5". Please find the attached spreadsheet that summarizes the roadway core results.

The Project's Plans or Geotechnical Report does not indicate concrete pavement is present within the existing roadway. The Geotechnical Report's pavement cores indicate limerock base is present and there were no indications of concrete pavement. Please see the snapshot below from the Geotechnical Report's pavement core results. The plan's roadway typical section is composed of a typical flexible pavement section consisting of stabilized subgrade, limerock base, and asphalt. Please refer to the plan's typical section snapshot below. As a result, the discovery of the existing concrete pavement may necessitate a change in the roadway reconstruction approach and limits for the project.

As you are aware, JEA O&M has significantly increased their scope of work for the project to include the full replacement of the existing gravity sewer main on 7th Street between Boulevard St. and Pearl St. The gravity sewer replacement trench line will be positioned in the approx. center of the south lane and the COJ's drainage pipe trench line is approx. centered in the north lane. As a result, the majority of the roadway including the existing concrete pavement will be demolished and fully reconstructed with these pipe trenches. The only remaining existing roadway and concrete pavement would potentially be some narrow strips along the roadway C/L between the trenches and along the outside edges of the lanes/curb. These potential narrow sections of existing concrete pavement are concerning due to the probability of differential settlement and reflective cracking occurring at the interface between an existing rigid pavement (concrete) section and the typical section's proposed flexible pavement section.

As a result, we recommend for the COJ to consider fully reconstructing both lanes following the plan's typical section within the limits of the existing concrete pavement. At this time, we haven't confirmed whether the concrete pavement extends under the existing curb lines, so the curb lines could also be affected and warrant replacement under a full reconstruction approach. JEA has previously agreed to take responsibility for the roadway reconstruction costs associated with their sewer trench line. But, we haven't discussed the possibility of needing to fully reconstruct the entire lane due to the presence of the concrete pavement. If the COJ choses to proceed with the full reconstruction of both lanes, we will have follow up discussions with JEA about what portions of those costs they will participate in.

Due to this changed condition, the Contractor will likely be seeking additional compensation for the removal and disposal of the concrete pavement as the drainage installation proceeds. They will also be seeking direction on how to reconstruct the roadway. Please review and advise us on how the COJ would like to proceed with the roadway

reconstruction where the concrete pavement has been found. If the COJ would like to meet to discuss this matter in detail, please let us know.

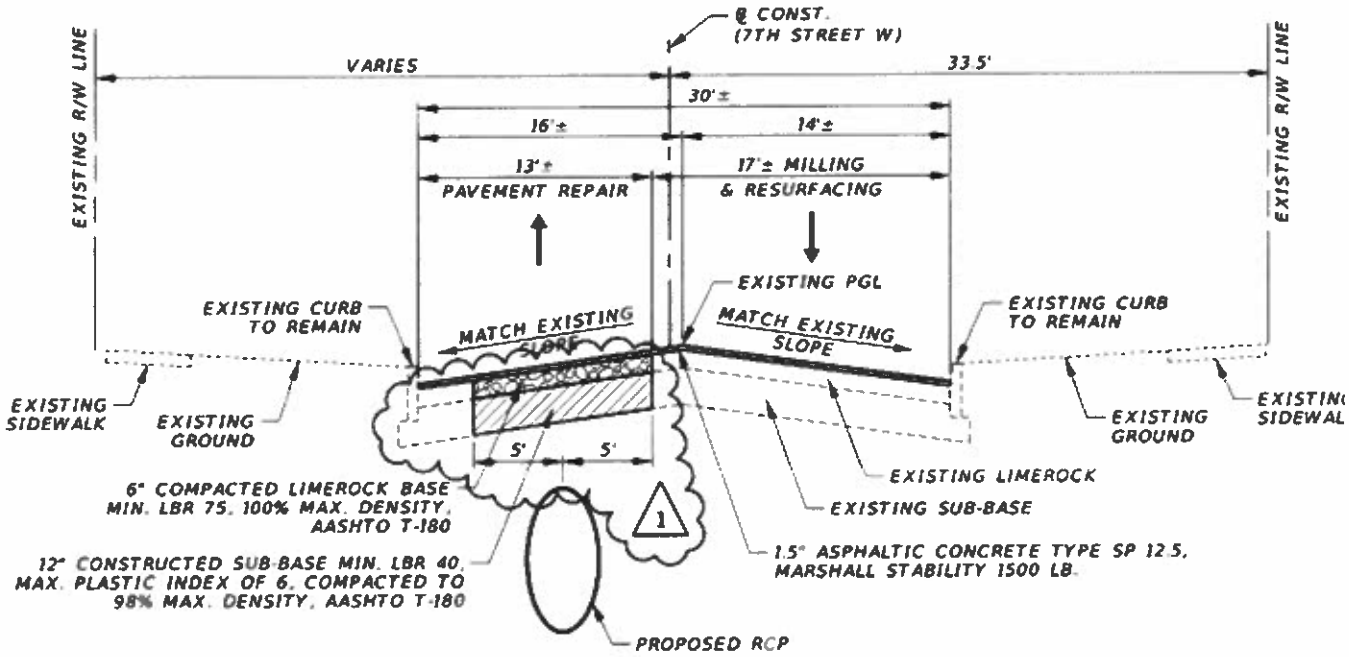

ASPHALT AND LIMEROCK CORE THICKNESS

7th Street Drainage Improvements
Jacksonville, Florida

Core No.	Boring No.	Station	Offset	Asphalt Thickness (in)	Limerock Thickness (in)
C-1	A-3	17+08	3' RT	5	3
C-2	A-4	21+40	4' RT	3	6
C-3	A-5	24+40	2' RT	2	5
C-4	A-6	26+70	15' LT	2	6

Thank you,

Nathan Pearson
Project Administrator
VIA Consulting Services, Inc. (DBE)
10250 Normandy Blvd, Suite 304
Jacksonville, FL, 32221
(904) 783-9842 (office)
(904) 859-6617 (mobile)

DocuSign Envelope ID: DF316DC0-98D5-4229-B83F-419C0BD36770

VIA CONSULTING SERVICES, INC.

http://www.via-cs.com
http://www.facebook.com/VIAcsinc

DocuSign Envelope ID: DF316DC0-98D5-4229-B83F-419C0BD36770

Existing Roadway Core Data; 7th Street Drainage Improvements (COJ Contract No. 70089-23)					
Core Number	Station	Offset	Asphalt Thickness	Concrete Encountered?	Concrete Thickness
1	15+14.00	RT	3.50	Yes	6.25
2	16+35.58	CL	3.25	Yes	6.00
3	17+22.33	LT	6.00	YES	6.50
4	17+46.00	RT	8.50	No	0.00
5	17+90.66	RT	4.00	Could not obtain	
6	18+12.25	LT	4.00	Yes	5.00
7	19+60.00	CL	4.00	Yes	6.00
8	21+40.00	RT	4.00	Yes	5.50
9	22+47.50	LT	5.50	Yes	6.00
10	23+20.00	CL	5.00	No	0.00
11	24+80.00	RT	3.50	No	0.00
12	26+07.75	LT	2.00	No	0.00
13	27+08.50	RT	4.00	No	0.00
14	27+40.00	RT	5.75	No	0.00
15	27+48.33	LT	3.75	No	0.00

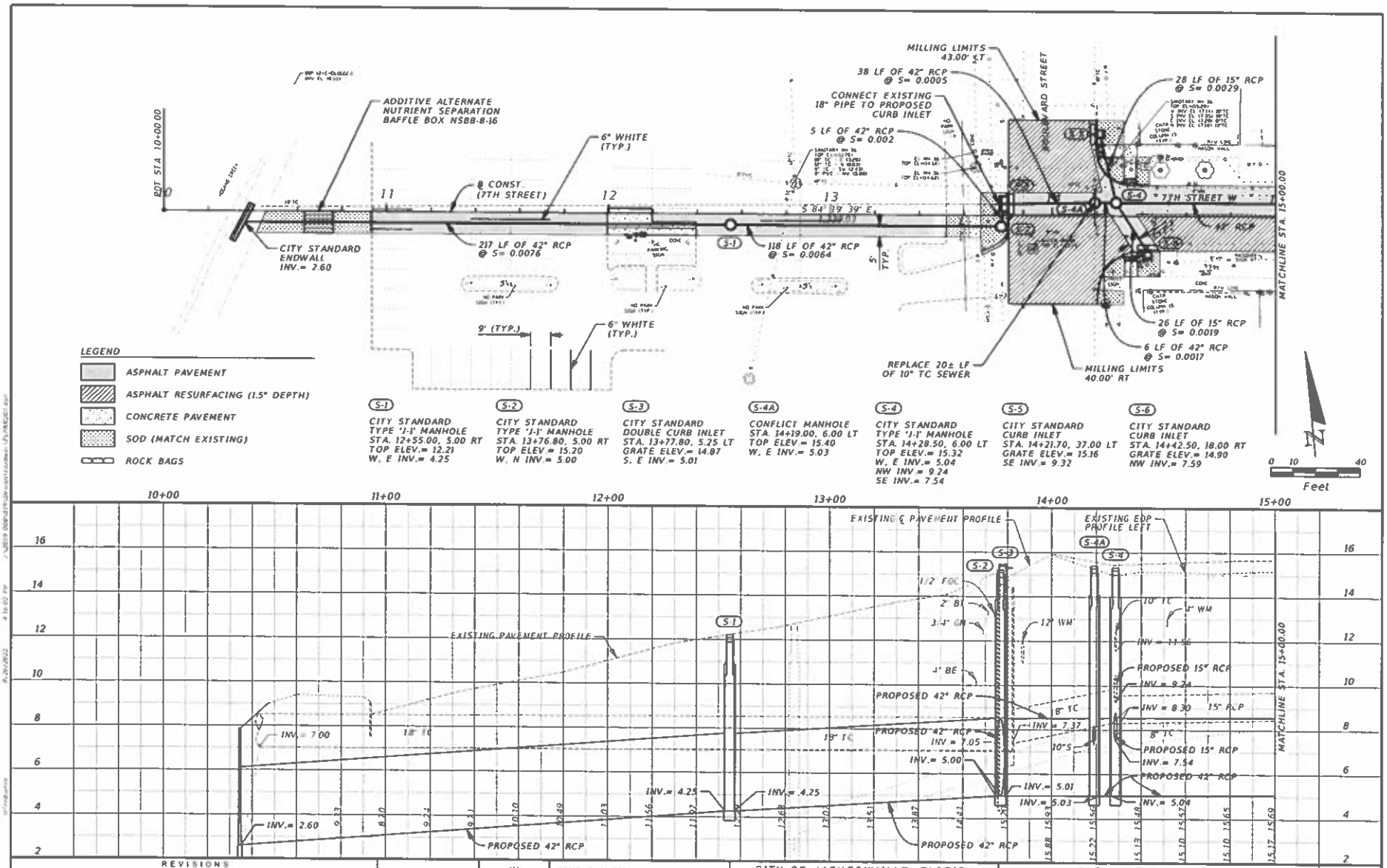

REVISIONS		
DATE	BY	DESCRIPTION
08/24/2022		Amendment #1 - add Nutrient seperating baffle box.

ONE CITY. ONE JACKSONVILLE

DESIGN ENGINEER:
John H. Moye PE License No. 36131
WAITZ&MOYE

CITY OF JACKSONVILLE, FLORIDA
DEPARTMENT OF PUBLIC WORKS

DATE	SCALE	PROJECT #
8/26/2022	HORIZ. 1" = 40' VERT. 1" = 4'	2019-008-019

7th Street W Drainage Improvements

PLAN & PROFILE

SHEET NO. 7

DocuSign Envelope ID: DF316DC0-98D5-4229-B83F-419C0BD36770

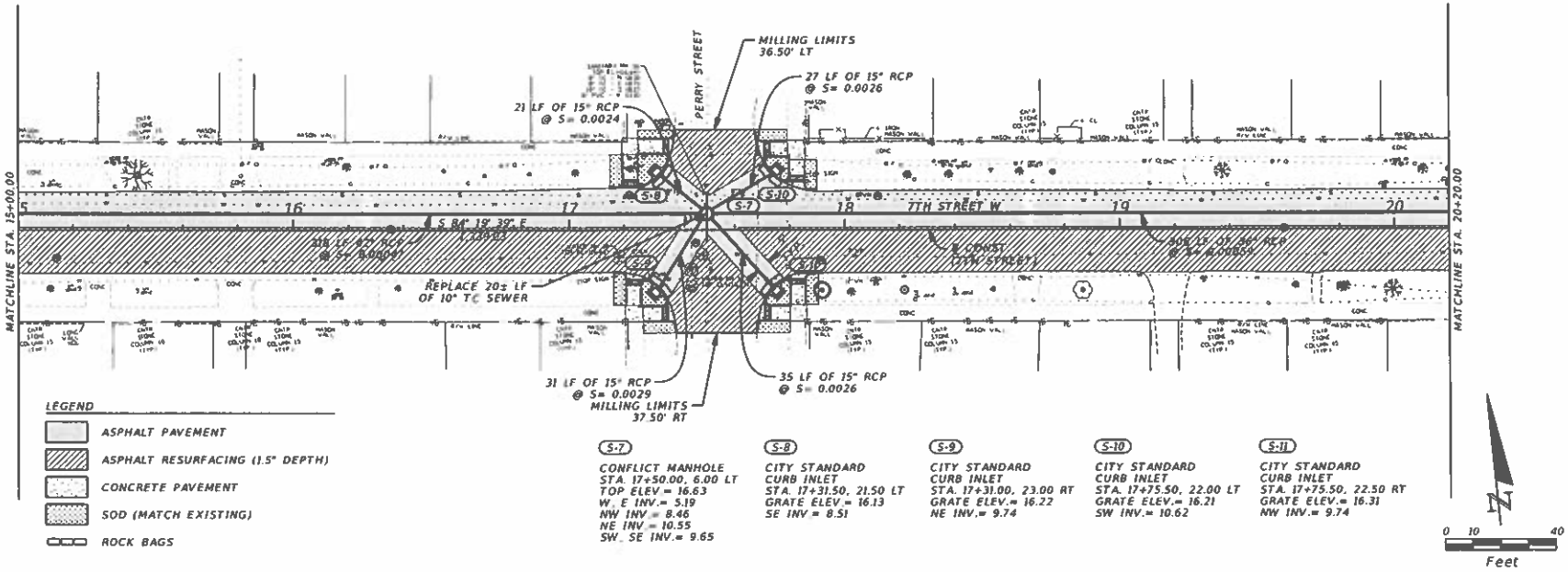

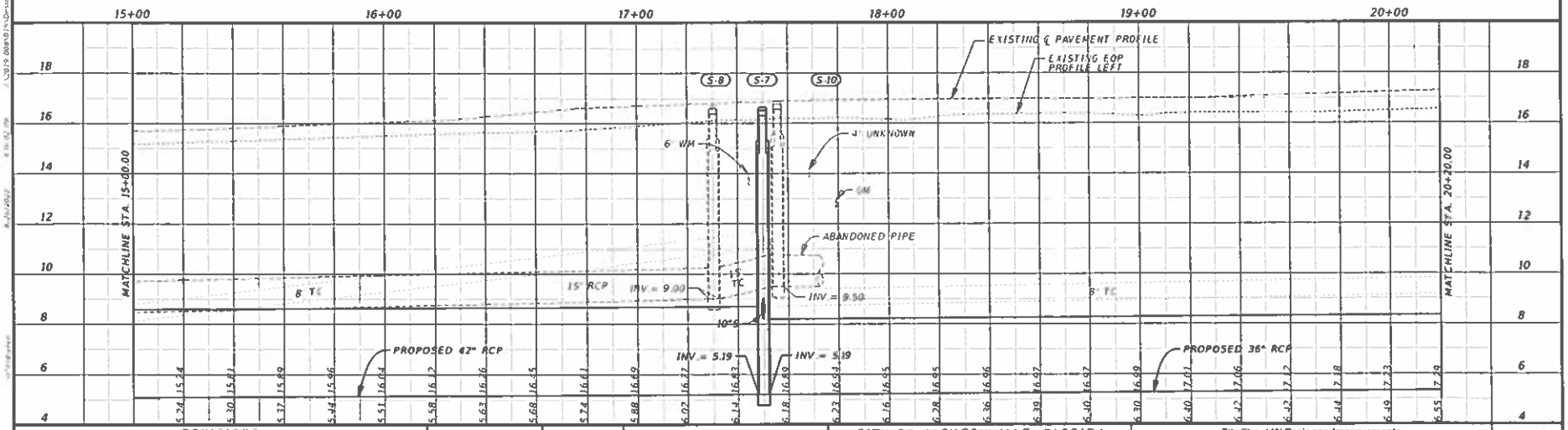

REVISIONS		
DATE	BY	DESCRIPTION

ONE CITY. ONE JACKSONVILLE

DESIGN ENGINEER:
John H. Moye PE License No. 36131
WAITZ&MOYE
3734 Southside Blvd. Suite 101
Jacksonville, Florida 32216
C.A. No. 6234 • 904.642.0311

CITY OF JACKSONVILLE, FLORIDA
DEPARTMENT OF PUBLIC WORKS

DATE	SCALE	PROJECT #
8/26/2022	HORIZ. 1" = 40' VERT. 1" = 4'	2019-008-019

7th Street W Drainage Improvements

PLAN & PROFILE

SHEET NO. 8

DocuSign Envelope ID: DF316DC0-98D5-4229-B83F-419C0BD36770

DocuSign Envelope ID: DF316DC0-98D5-4229-B83F-419C0BD36770

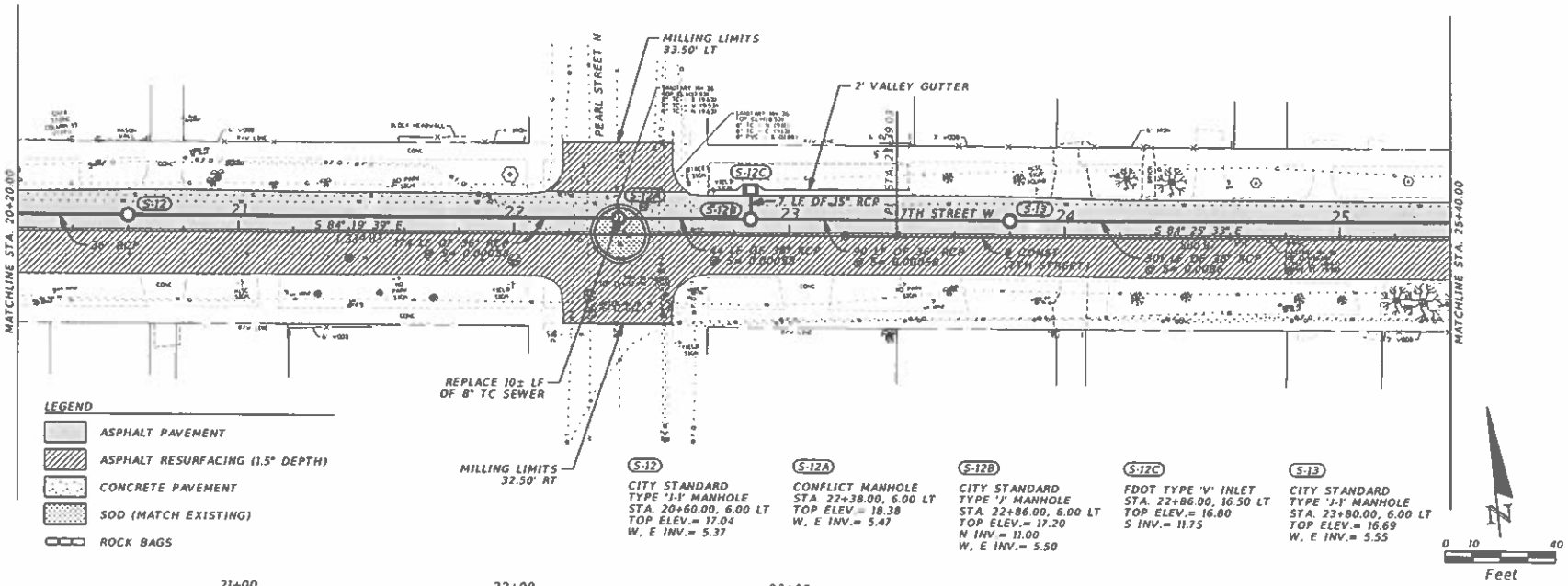

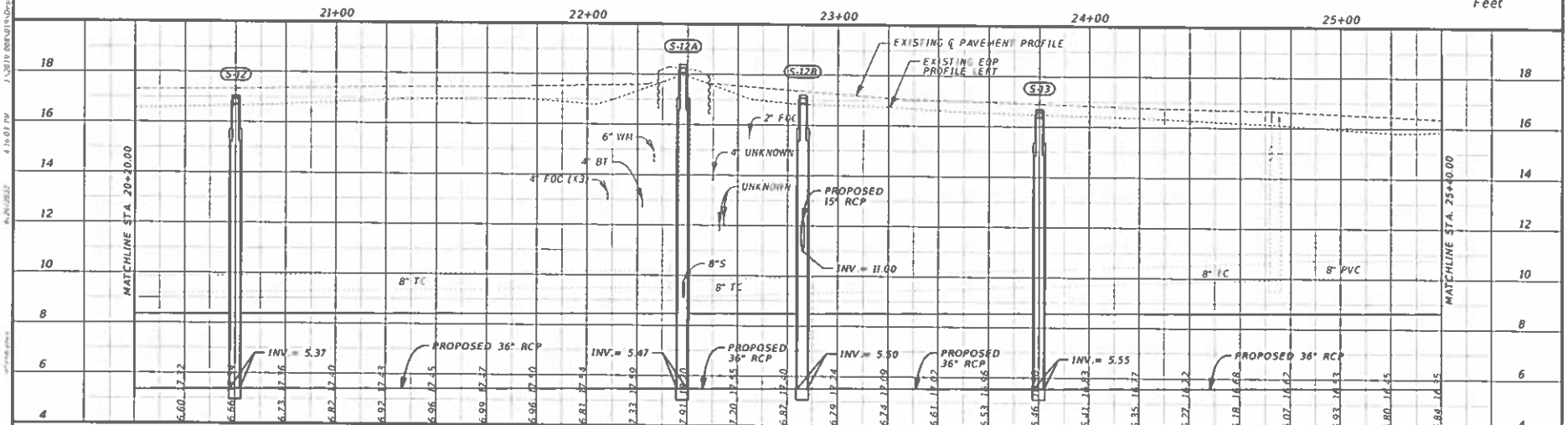

REVISIONS		
DATE	BY	DESCRIPTION
08/29/2022		Amendment #1 - added s-12b, s-12 c, 15 inch rcp, and 2' valley gutter.

ONE CITY, ONE JACKSONVILLE.

DESIGN ENGINEER:
John H. Moye PE License No. 38131
WAITZ&MOYE
3736 Southside Blvd Suite 101
Jacksonville Florida 32216
C.A. No. 5234 • 904 642 8319

CITY OF JACKSONVILLE, FLORIDA
DEPARTMENT OF PUBLIC WORKS

DATE	SCALE	PROJECT #
8/26/2022	HORIZ. 1" = 40' VERT. 1" = 4'	2019-008-019

7th Street W Drainage Improvements

PLAN & PROFILE

SHEET NO 9

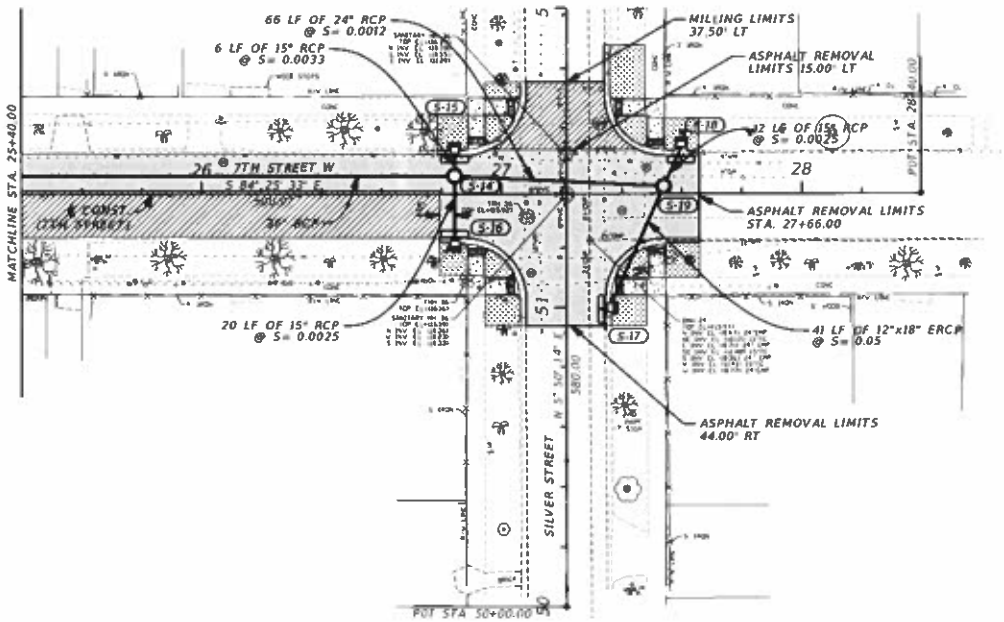

S-14
CITY STANDARD
TYPE 'J-1' MANHOLE
STA. 26+84.50, 6.00 LT
TOP ELEV.= 15.50
W, E INV.= 5.73
N INV.= 11.11
S INV.= 12.10

S-15
CITY STANDARD
CURB INLET
STA. 26+84.50, 15.10 LT
GRATE ELEV.= 14.93
S INV.= 11.13

S-16
CITY STANDARD
CURB INLET
STA. 26+84.50, 17.00 RT
GRATE ELEV.= 15.00
N INV.= 12.15

S-17
CITY STANDARD
CURB INLET
STA. 27+36.49, 37.97 RT
GRATE ELEV.= 15.16
NE INV.= 12.96

S-18
CITY STANDARD
CURB INLET
STA. 27+60.00, 17.00 LT
GRATE ELEV.= 15.19
SW INV.= 8.90

S-19
CITY STANDARD
TYPE 'J-1' MANHOLE
STA. 27+54.00, 2.50 LT
TOP ELEV.= 16.30
W INV.= 5.81
NE INV.= 8.87
SW INV.= 10.93

LEGEND
- ASPHALT PAVEMENT
- ASPHALT RESURFACING (1.5" DEPTH)
- CONCRETE PAVEMENT
- SOD (MATCH EXISTING)
- ROCK BAGS

N
0 10 40
Feet

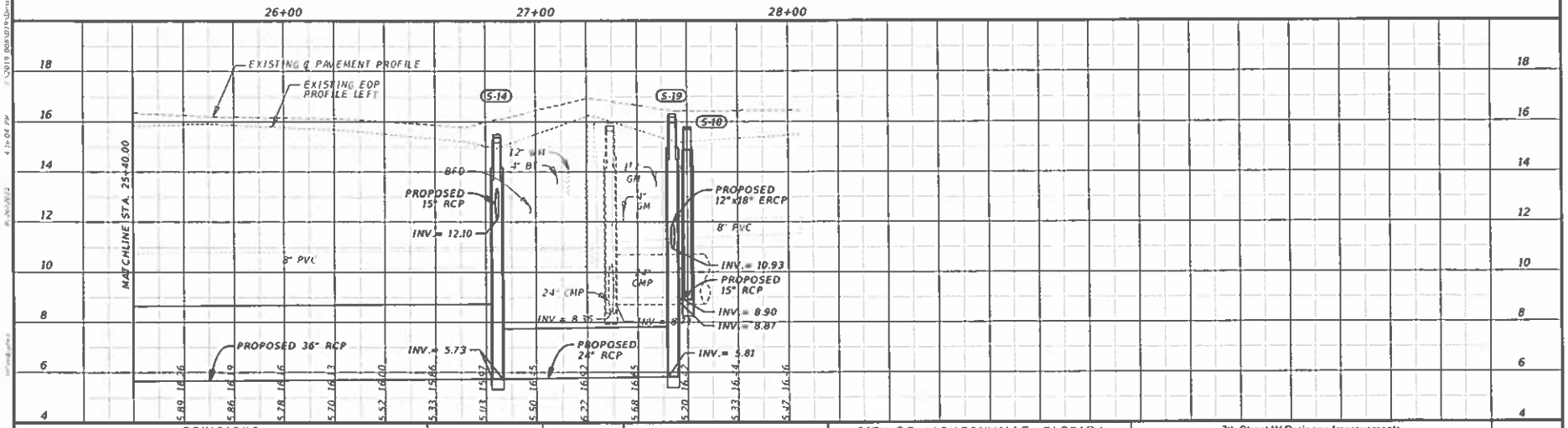

REVISIONS		
DATE	BY	DESCRIPTION

ONE CITY. ONE JACKSONVILLE.

DESIGN ENGINEER:
John H. Moye PE License No. 36131
WAITZ&MOYE
37 N. Southside Blvd. Suite 101
Jacksonville, Florida 32216
C.A. No. 6234 • 904.642.8315

CITY OF JACKSONVILLE, FLORIDA
DEPARTMENT OF PUBLIC WORKS

DATE	SCALE	PROJECT#
8/26/2022	HORIZ. 1" = 40' VERT. 1" = 4'	2019-008-019

7th Street W Drainage Improvements

PLAN & PROFILE

SHEET NO 10

DocuSign Envelope ID: DF316DC0-98D5-4229-B83F-419C0BD36770

DocuSign Envelope ID: DF316DC0-98D5-4229-B83F-419C0BD36770

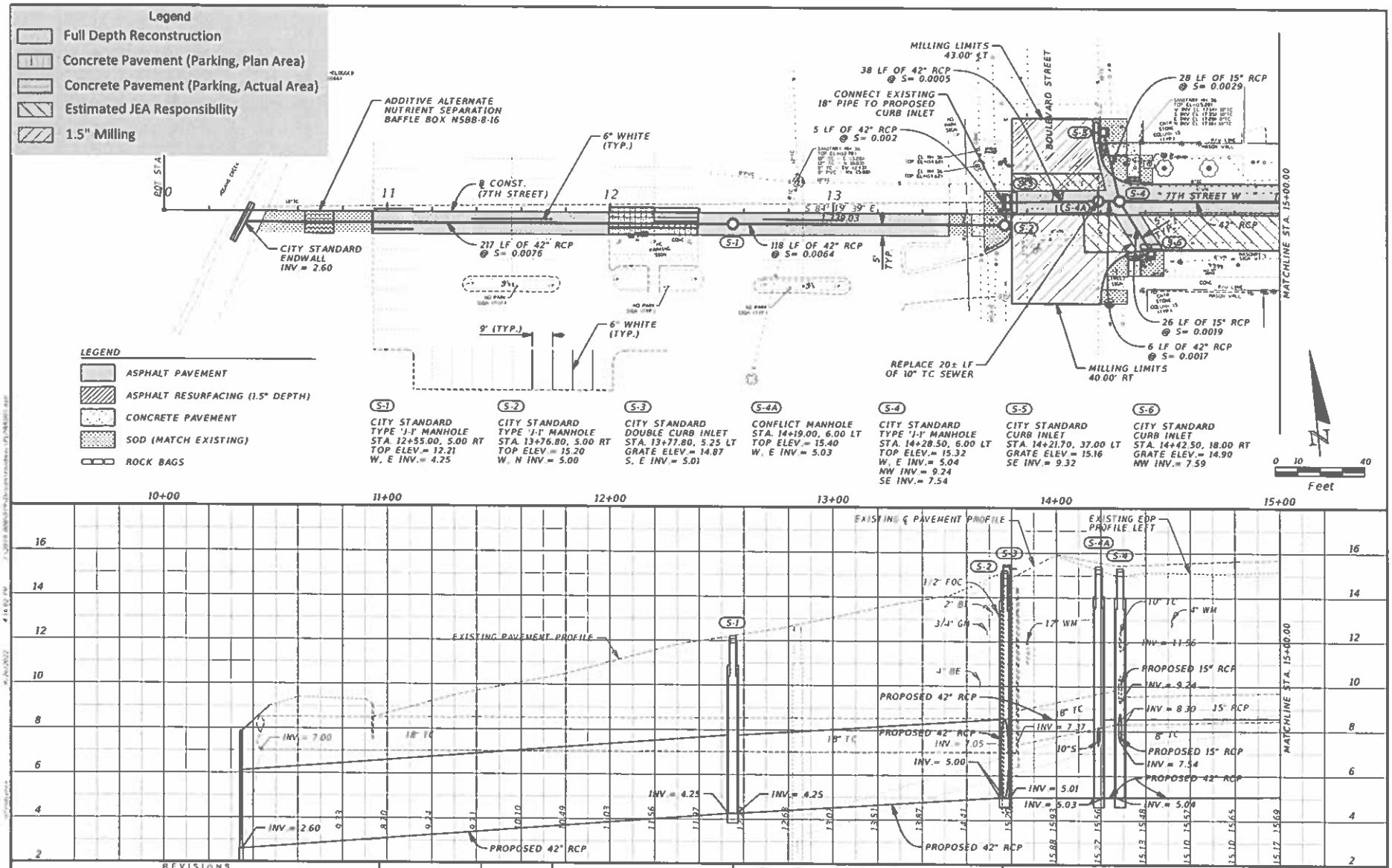

REVISIONS		
DATE	BY	DESCRIPTION
10/29/2022		Amendment #1 - add Nutrient seperating baffle box.

ONE CITY, ONE JACKSONVILLE

DESIGN ENGINEER:
John H. Moye PE License No. 36131
WAITZ&MOYE
C.A. No. 6234 • 904.642.8311

CITY OF JACKSONVILLE, FLORIDA
DEPARTMENT OF PUBLIC WORKS

DATE	SCALE	PROJECT #
8/26/2022	HORIZ. 1" = 40' VERT. 1" = 4'	2019-008-019

7th Street W Drainage Improvements

PLAN & PROFILE

SHEET NO. 7

DocuSign Envelope ID: DF316DC0-98D5-4229-B83F-419C0BD36770

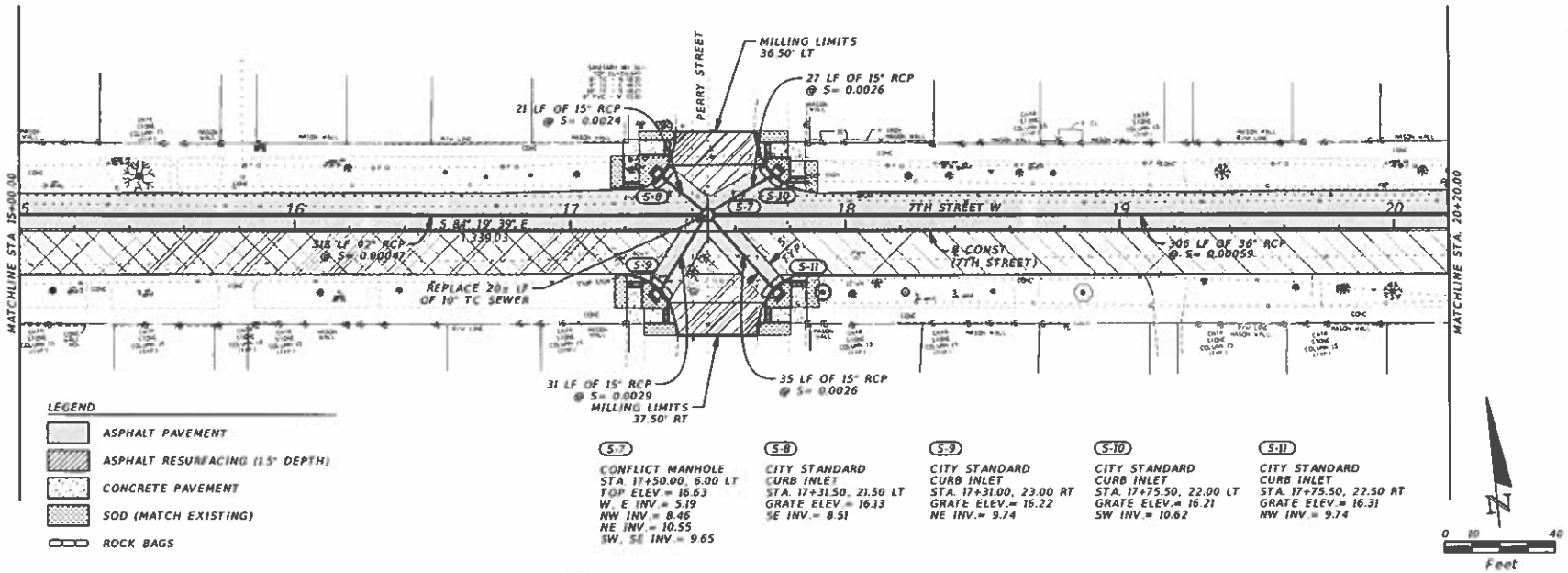

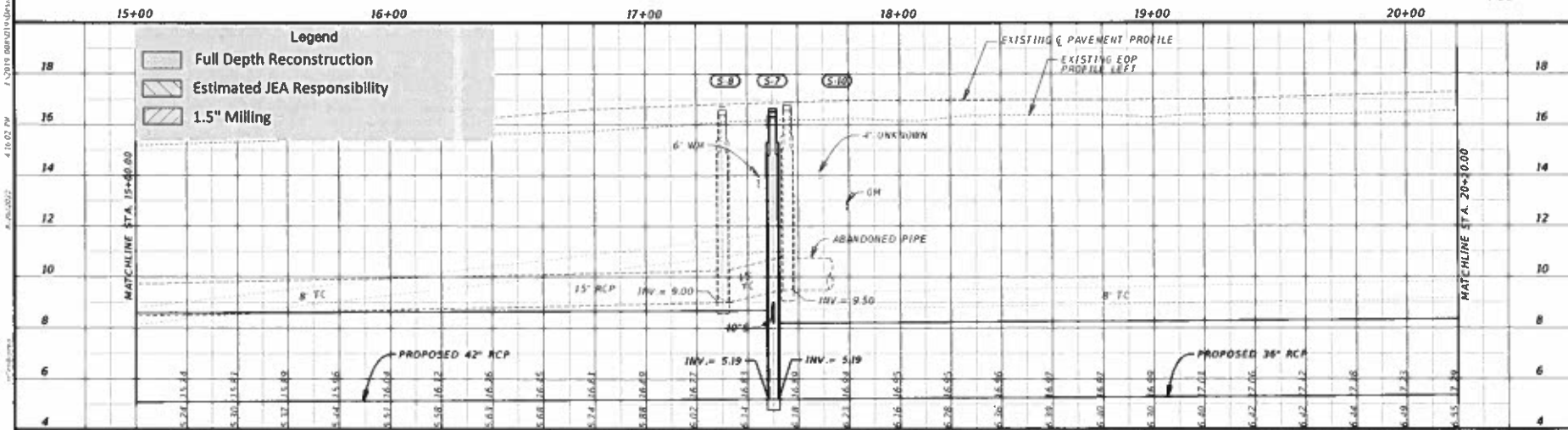

REVISIONS		
DATE	BY	DESCRIPTION

ONE CITY. ONE JACKSONVILLE.

DESIGN ENGINEER:
John H. Mays PE License No. 36131
WAITZ&MOYE

CITY OF JACKSONVILLE, FLORIDA
DEPARTMENT OF PUBLIC WORKS

DATE	SCALE	PROJECT #
8/26/2022	HORIZ. 1" = 40' VERT. 1" = 4'	2019-008-019

7th Street W Drainage Improvements

PLAN & PROFILE

SHEET NO. 8

DocuSign Envelope ID: DF316DC0-98D5-4229-B83F-419C0BD36770

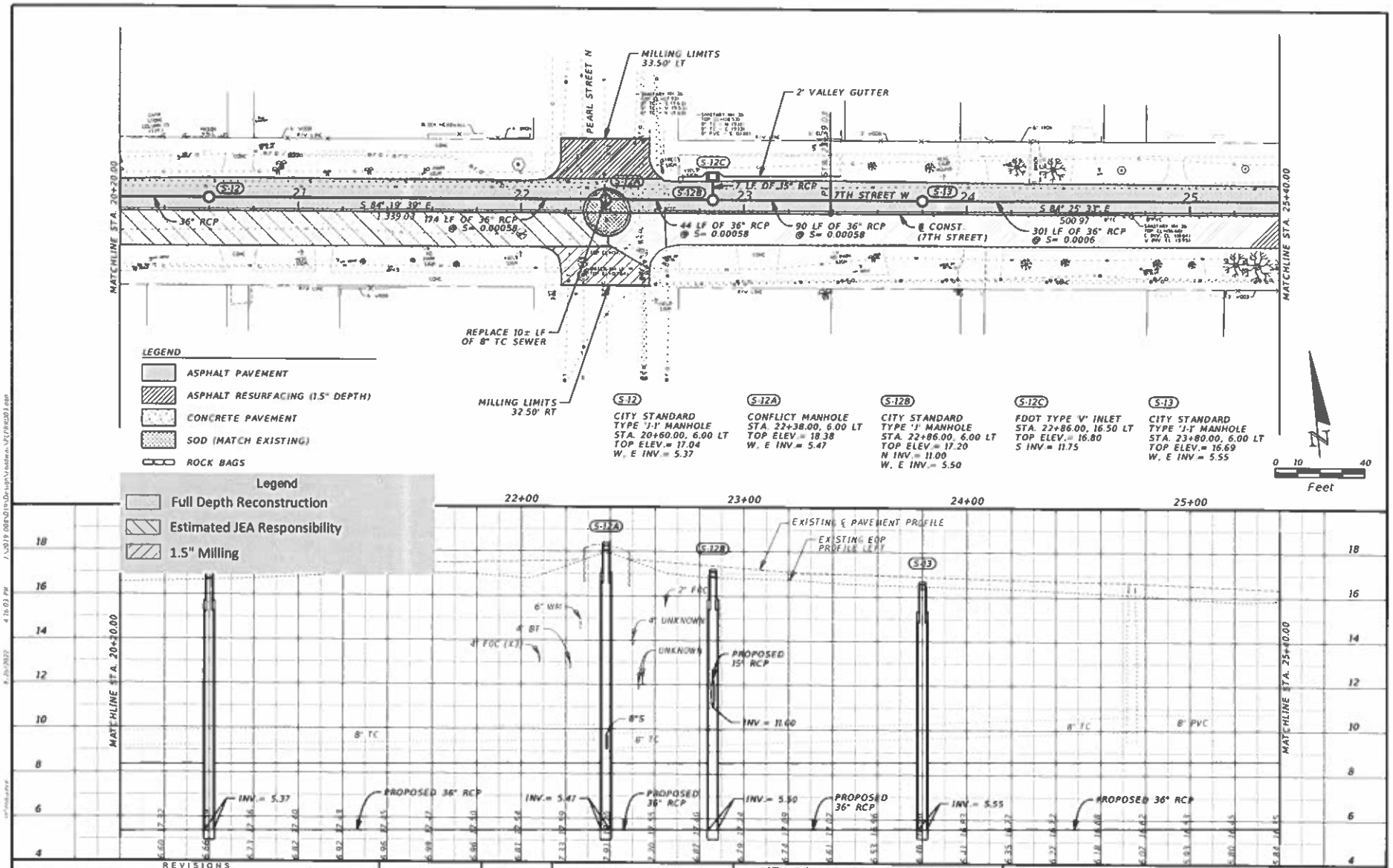

REVISIONS		
DATE	BY	DESCRIPTION
08/29/2022		Amendment #1 - added s-12b, s-12 c, 15 inch rcp, and 2' valley gutter

ONE CITY, ONE JACKSONVILLE

DESIGN ENGINEER: John H. Moye PE License No. 36131
WAITZ&MOYE
1730 Southside Blvd. Suite 101
Jacksonville, Florida 32216
C.A. No. 6234 • 904.642.8311

CITY OF JACKSONVILLE, FLORIDA
DEPARTMENT OF PUBLIC WORKS

DATE	SCALE	PROJECT #
8/26/2022	HORIZ. 1" = 40' VERT. 1" = 4'	2019-008-019

7th Street W Drainage Improvements

PLAN & PROFILE

SHEET NO. 9

DocuSign Envelope ID: DF316DC0-98D5-4229-B83F-419C0BD36770

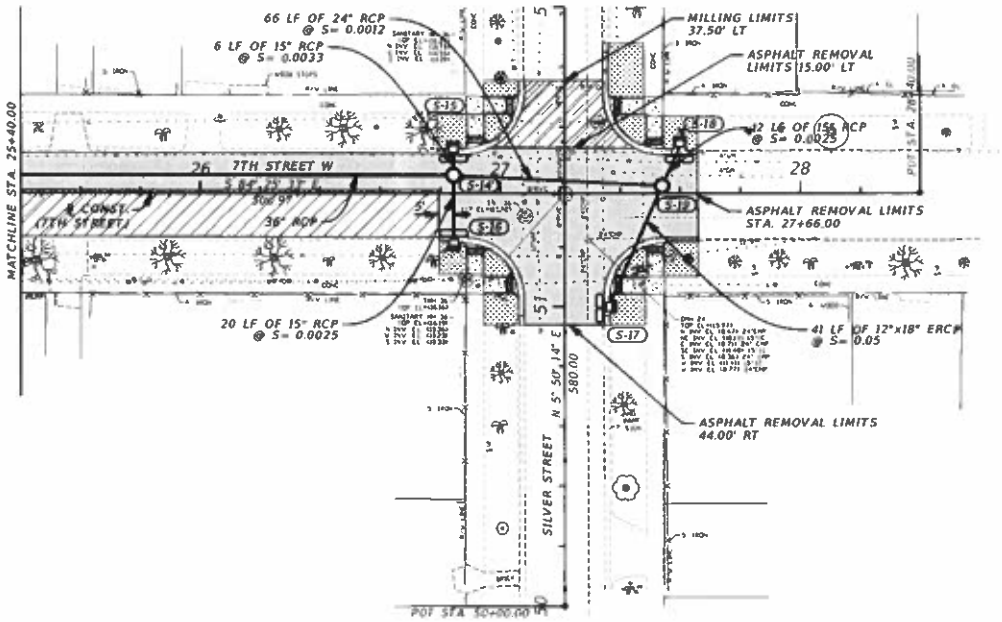

S-14
CITY STANDARD
TYPE 'J-1' MANHOLE
STA. 26+84.50, 6.00 LT
TOP ELEV.= 15.50
W, E INV.= 5.73
N INV.= 11.11
S INV.= 12.10

S-15
CITY STANDARD
CURB INLET
STA. 26+84.50, 15.10 LT
GRATE ELEV.= 14.93
S INV.= 11.13

S-16
CITY STANDARD
CURB INLET
STA. 26+84.50, 17.00 RT
GRATE ELEV.= 15.00
N INV.= 12.15

S-17
CITY STANDARD
CURB INLET
STA. 27+36.49, 37.97 RT
GRATE ELEV.= 15.16
NE INV.= 12.96

S-18
CITY STANDARD
CURB INLET
STA. 27+60.00, 17.00 LT
GRATE ELEV.= 15.19
SW INV.= 8.90

S-19
CITY STANDARD
TYPE 'J-1' MANHOLE
STA. 27+54.00, 2.50 LT
TOP ELEV.= 16.30
W INV.= 5.81
NE INV.= 8.87
SW INV.= 10.93

LEGEND
- ASPHALT PAVEMENT
- ASPHALT RESURFACING (1.5" DEPTH)
- CONCRETE PAVEMENT
- SOD (MATCH EXISTING)
- ROCK BAGS

N

0 10 40
Feet

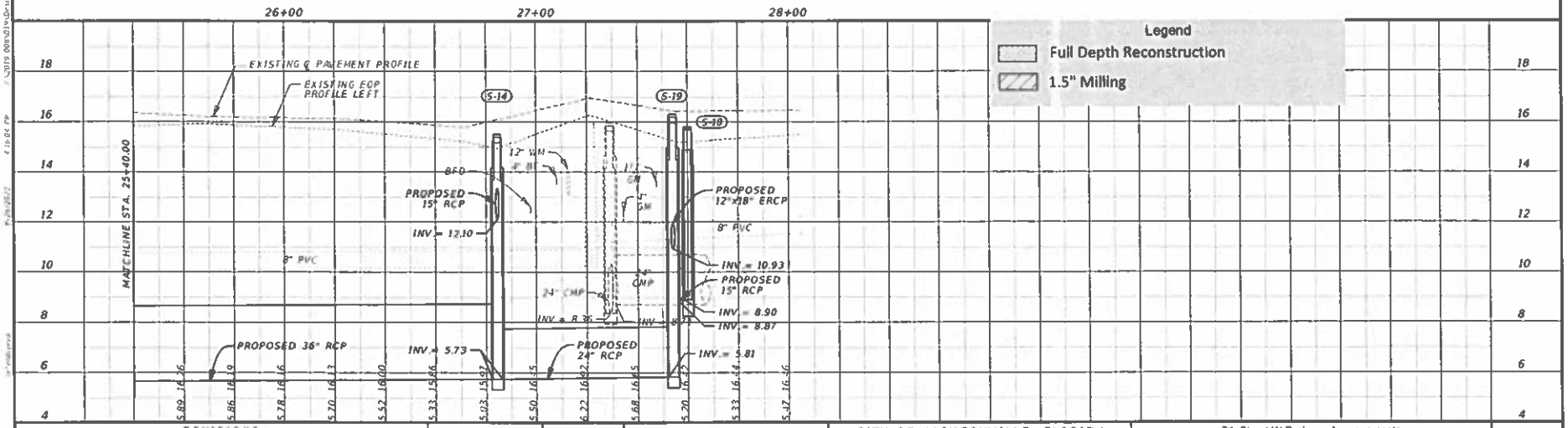

REVISIONS		
DATE	BY	DESCRIPTION

ONE CITY. ONE JACKSONVILLE.

DESIGN ENGINEER:
John H. Moye PE License No. 36131
WAITZ&MOYE

CITY OF JACKSONVILLE, FLORIDA
DEPARTMENT OF PUBLIC WORKS

DATE	SCALE	PROJECT #
8/26/2022	HORIZ. 1" = 40' VERT. 1" = 4'	2019-008-019

7th Street W Drainage Improvements

PLAN & PROFILE

SHEET NO 10

DocuSign Envelope ID: DF316DC0-98D5-4229-B83F-419C0BD36770

Nathan Pearson

From: Jim <jim@callawaycontracting.com>
Sent: Wednesday, October 18, 2023 3:31 PM
To: Reid Harriett
Cc: Bobby; Neal; Johnny; Landra Draper; tcurry@eismanrusso.com; Frederick Sumter (FSumter@coj.net); Nathan Pearson
Subject: RE: RFI #02 - Concrete Pavement Encountered Under Asphalt; 7th Street Drainage Improvements (COJ Contract No. 70089-23)

Reid,

To replace the curb on the project a block at a time is $58.50 / LF for either City Standard Curb or Header Curb.

Thank you,

Jim

From: Reid Harriett <rharriett@via-cs.com>
Sent: Tuesday, October 17, 2023 12:26 PM
To: Jim <jim@callawaycontracting.com>
Cc: Bobby <bobby@callawaycontracting.com>; Neal <neal@callawaycontracting.com>; Johnny <Johnny@callawaycontracting.com>; Landra Draper <ldraper@via-cs.com>; tcurry@eismanrusso.com; Frederick Sumter (FSumter@coj.net) <FSumter@coj.net>; Nathan Pearson <npearson@via-cs.com>
Subject: RE: RFI #02 - Concrete Pavement Encountered Under Asphalt; 7th Street Drainage Improvements (COJ Contract No. 70089-23)

Jim,

We have preliminarily discussed the existing concrete pavement removal and road reconstruction with the COJ, and they're planning to move forward with that additional work. However, the COJ cannot provide official authorization until there is a price agreement and change order in place. We need the curb replacement pricing we requested to finalize the cost of work discussions. Please provide it as soon as possible.

Thanks,

Reid Harriett, P.E.
Senior Project Engineer
VIA Consulting Services, Inc.
rharriett@via-cs.com
(904)-451-7254 (Mobile)

Corporate Office
10250 Normandy Blvd., Suite 304
Jacksonville, Florida 32221
(904) 783-9842 (office)

SR-23 FCE Field Office
1421 South Orange Ave.
Green Cove Springs, Florida 32043
(904)-901-0800 (office)

From: Jim <jim@callawaycontracting.com>
Sent: Monday, October 16, 2023 2:33 PM
To: Nathan Pearson <npearson@via-cs.com>
Cc: Bobby <bobby@callawaycontracting.com>; Neal <neal@callawaycontracting.com>; Johnny <Johnny@callawaycontracting.com>; Reid Harriett <rharriett@via-cs.com>; Landra Draper <ldraper@via-cs.com>; tcurry@eismanrusso.com
Subject: RE: RFI #02 - Concrete Pavement Encountered Under Asphalt; 7th Street Drainage Improvements (COJ Contract No. 70089-23)

Nathan,

We are starting the concrete removal for the first block. I have not seen anything on the pricing. I want to make sure we are approved to proceed.

From: Nathan Pearson <npearson@via-cs.com>
Sent: Monday, September 25, 2023 12:57 PM
To: Jim <jim@callawaycontracting.com>
Cc: Bobby <bobby@callawaycontracting.com>; Neal <neal@callawaycontracting.com>; Johnny <Johnny@callawaycontracting.com>; Reid Harriett <rharriett@via-cs.com>; Landra Draper <ldraper@via-cs.com>; tcurry@eismanrusso.com
Subject: RE: RFI #02 - Concrete Pavement Encountered Under Asphalt; 7th Street Drainage Improvements (COJ Contract No. 70089-23)

Jim,

Thanks for getting this back to us. I do have one question as of now. Will the pricing for the concrete removal in the first 2 blocks include the additional asphalt thickness? I want to make sure we present accurate numbers to the City when we set up a meeting with them this week. We will discuss the concerns with the curb at that time also and get back with you.

Thanks,

Nathan Pearson
Project Administrator
VIA Consulting Services, Inc. (DBE)
10250 Normandy Blvd, Suite 304
Jacksonville, FL, 32221
(904) 783-9842 (office)
(904) 859-6617 (mobile)

VIA CONSULTING SERVICES, INC.
http://www.via-cs.com
http://www.facebook.com/VIAcsinc

From: Jim <jim@callawaycontracting.com>
Sent: Friday, September 22, 2023 4:19 PM
To: Nathan Pearson <npearson@via-cs.com>
Cc: Bobby <bobby@callawaycontracting.com>; Neal <neal@callawaycontracting.com>; Johnny <Johnny@callawaycontracting.com>; Reid Harriett <rharriett@via-cs.com>; Landra Draper <ldraper@via-cs.com>; tcurry@eismanrusso.com
Subject: RE: RFI #02 - Concrete Pavement Encountered Under Asphalt; 7th Street Drainage Improvements (COJ Contract No. 70089-23)

Nathan,

With the curb being header style curb, Callaway Contracting cannot be held responsible for the condition of the curb as we remove the asphalt and concrete from the roadway.
This curb is not in good shape and will not survive the roadway demolition intact. The curb is settled and broken in many areas.
Please talk to the City about installing new curb on the project.

Our pricing holds for the roadway rebuild items, if nothing has changed from the plans.

In addition to the concrete removal pricing and mobilizations, we need pricing added for the additional asphalt removal in the areas with no concrete. The plans show removal of 1.5". The cores show an average of 4" of Asphalt.

Our price for the Removal of Existing Asphalt in the block without concrete is $11.36 / SY.

Removal of Existing Concrete	SY	$25.80	2967.27
Milling/ Asphalt Paving Mobilizations	EA	$3,200.00	2

Our Temporary Asphalt price is going to be the same as our bid asphalt price. I can't go any lower than that due to recent price increases.

Please let me know about the curb.

Thank you,

Jim Callaway

From: Nathan Pearson <npearson@via-cs.com>
Sent: Monday, September 11, 2023 8:46 AM
To: Jim <jim@callawaycontracting.com>
Cc: Bobby <bobby@callawaycontracting.com>; Neal <neal@callawaycontracting.com>; Johnny <Johnny@callawaycontracting.com>; Reid Harriett <rharriett@via-cs.com>; Landra Draper <ldraper@via-cs.com>; tcurry@eismanrusso.com
Subject: RE: RFI #02 - Concrete Pavement Encountered Under Asphalt; 7th Street Drainage Improvements (COJ Contract No. 70089-23)

Jim,

As we discussed in the progress meeting, our coring of the roadway resulted in discovery of concrete underneath the asphalt up to the east side of Pearl Street (see attached core information sheet). We have put together some approximate quantities of the anticipated removal quantity based on the findings of the cores and will need to have you confirm some pricing for consideration. Given the recent environmental focus on the project, we believe it may be beneficial to approach the reconstruction in multiple phases which would require additional mobilizations for milling/paving. I'll list some items that we need clarification if the contract price will be held and an estimated quantity for each. For the concrete pavement removal, I'll list the approximate quantity for you to quote removal and disposal.

We need to verify whether the concrete is present under the curb and gutter through these areas. If your field staff could assist our inspector with investigating that, it would be appreciated.

Please verify if the contract price will be held for the below contract items and provide pricing for the highlighted items.

Item	UOM	Unit Price	Est. QTY
Asphalt Paving (1.5" Avg Depth)	SY	$ 19.94	5507.21
Asphalt Milling (1.5" Avg Depth)	SY	$ 6.50	1299.83
6" Limerock Base	SY	$ 24.78	4207.38
12" Stabilized Subgrade	SY	$ 11.37	4343.61
Removal of Existing Concrete	SY		2967.27
Milling/ Asphalt Paving Mobilizations	EA		2

Along with these items, we ask that you provide a price for temporary asphalt for the project. With the unique location, environmental concerns, and constructability requirements, the City is considering participating in a temporary asphalt approach to the project in-lieu-of the additional paving mobilizations to reduce the possibility of turbidity runoff.

If you have any questions on this, please let me know.

Thank you,

Nathan Pearson
Project Administrator
VIA Consulting Services, Inc. (DBE)
10250 Normandy Blvd, Suite 304
Jacksonville, FL, 32221
(904) 783-9842 (office)
(904) 859-6617 (mobile)

VIA CONSULTING SERVICES, INC.

http://www.via-cs.com
http://www.facebook.com/VIAcsinc

From: Jim <jim@callawaycontracting.com>
Sent: Tuesday, August 22, 2023 7:54 AM
To: Nathan Pearson <npearson@via-cs.com>
Cc: Bobby <bobby@callawaycontracting.com>; Neal <neal@callawaycontracting.com>; Johnny

<Johnny@callawaycontracting.com>; Reid Harriett <rharriett@via-cs.com>; Landra Draper <ldraper@via-cs.com>; tcurry@eismanrusso.com
Subject: Re: 7th Street Drainage RFI - Concrete Roadway

Nathan,

Any update on this? To date, we have encountered concrete under all of the roadway in Boulevard and 7th streets.

From: Nathan Pearson <npearson@via-cs.com>
Sent: Monday, August 14, 2023 10:02:46 AM
To: Jim <jim@callawaycontracting.com>
Cc: Bobby <bobby@callawaycontracting.com>; Neal <neal@callawaycontracting.com>; Johnny <Johnny@callawaycontracting.com>; Reid Harriett <rharriett@via-cs.com>; Landra Draper <ldraper@via-cs.com>; tcurry@eismanrusso.com <tcurry@eismanrusso.com>
Subject: RE: 7th Street Drainage RFI - Concrete Roadway

Jim,

To give you an update, we have talked to the City and they are exploring the options for having the roadway cored. As soon as I have an answer as to whether they want to have it done through a continuing services contract or to pay you to have a sub come in and do it, I'll let you know.

Thank you,

Nathan Pearson
Project Administrator
VIA Consulting Services, Inc. (DBE)
10250 Normandy Blvd, Suite 304
Jacksonville, FL, 32221
(904) 783-9842 (office)
(904) 859-6617 (mobile)

VIA CS
VIA CONSULTING SERVICES, INC.

http://www.via-cs.com
http://www.facebook.com/VIAcsinc

From: Jim <jim@callawaycontracting.com>
Sent: Wednesday, August 9, 2023 3:25 PM
To: Nathan Pearson <npearson@via-cs.com>; Reid Harriett <rharriett@via-cs.com>; Landra Draper <ldraper@via-cs.com>; tcurry@eismanrusso.com
Cc: Bobby <bobby@callawaycontracting.com>; Neal <neal@callawaycontracting.com>; Johnny <Johnny@callawaycontracting.com>
Subject: RE: 7th Street Drainage RFI - Concrete Roadway

If the City will pay to have the roadway cored, we can call and set up a testing firm like ECS to come out and start.

From: Nathan Pearson <npearson@via-cs.com>
Sent: Wednesday, August 9, 2023 3:20 PM
To: Jim <jim@callawaycontracting.com>; Reid Harriett <rharriett@via-cs.com>; Landra Draper <ldraper@via-cs.com>; tcurry@eismanrusso.com
Cc: Bobby <bobby@callawaycontracting.com>; Neal <neal@callawaycontracting.com>; Johnny <Johnny@callawaycontracting.com>
Subject: RE: 7th Street Drainage RFI - Concrete Roadway

Jim,

We need to determine the approximate extent of this issue to report back to COJ. We had discussed in the past progress meetings about coring the roadway to get an idea of what the pavement composition is. "Take 3"-4" cores - one at the north side and one at the south side of each block, alternating offset each block to have a representative sample of the sub-surface composition." Once we have collected this information, we can discuss with COJ and JEA about the appropriate way to move forward. Since we do not have the final JEA plans, we don't know for sure how much area will be disturbed so that may delay the response some. If it would be easier to cut a square/rectangular section rather than coring it, we could still get the needed information by that method. We will discuss further tomorrow at the progress meeting.

Thanks,

Nathan Pearson
Project Administrator
VIA Consulting Services, Inc. (DBE)
10250 Normandy Blvd, Suite 304
Jacksonville, FL, 32221
(904) 783-9842 (office)
(904) 859-6617 (mobile)

VIA CONSULTING SERVICES, INC.
http://www.via-cs.com
http://www.facebook.com/VIAcsinc

From: Jim <jim@callawaycontracting.com>
Sent: Wednesday, August 9, 2023 2:28 PM
To: Nathan Pearson <npearson@via-cs.com>; Reid Harriett <rharriett@via-cs.com>; Landra Draper <ldraper@via-cs.com>; tcurry@eismanrusso.com
Cc: Bobby <bobby@callawaycontracting.com>; Neal <neal@callawaycontracting.com>; Johnny <Johnny@callawaycontracting.com>
Subject: 7th Street Drainage RFI - Concrete Roadway

Nathan,

We have discovered that in the first block of 7th St. (between Boulevard and Perry) the existing roadway is asphalt on top of a concrete slab.

This condition differs from what the plans show. We do not know if this situation exists for the length of the project.

At a minimum, we will have to run two saw cuts through the asphalt and concrete, removing and disposing of a roughly 8' wide section, for the length of our pipe trench.
This is not the best long term solution, as cracks will eventually show through the asphalt surface due to the differences in subbase densities.

Please let us know how to proceed.

Thank you,

Jim

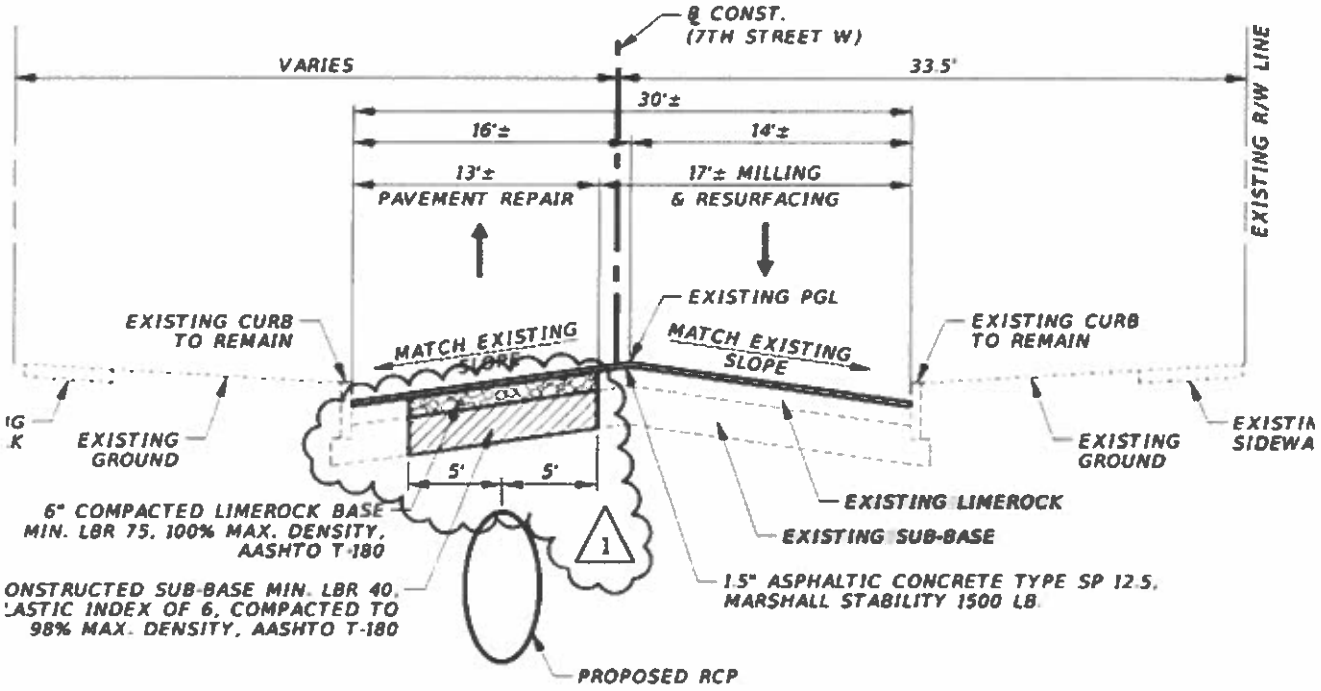

TYPICAL SECTION 1
STA. 14+40.00 TO STA. 22+60.00

DocuSign Envelope ID: DF316DC0-98D5-4229-B83F-419C0BD36770

BREAK PAGE

UNFORESEEN CONDITIONS 02 - FDOH GRAVITY SEWER LATERAL REPLACEMENT

DocuSign Envelope ID: DF316DC0-98D5-4229-B83F-419C0BD36770

PROJECT:	7th Street Drainage Improvements
CONTRACT NO:	70083-23
CHANGE ORDER NO.:	1
CONTRACTOR:	Callaway Contracting, Inc.
DESCRIPTION OF WORK:	Sewer Lateral Conflict
DATE:	

VIA CONSULTING SERVICES, INC.

LABOR ESTIMATE

POSITION	QTY.	UNIT	RATE	BURDEN RATE %	AMOUNT	COMMENT
Johnny Walker	66.5	HR	$ 44.50	38.00%	$ 4,083.77	
Keith Hartley	66.5	HR	$ 21.00	38.00%	$ 1,927.17	
Ryan Smith	2	HR	$ 21.00	38.00%	$ 57.96	
Mitchell Wynja	40	HR	$ 23.00	38.00%	$ 1,269.60	
Kenneth Williams	66.5	HR	$ 23.00	38.00%	$ 2,110.71	
Paul Theiss	66.5	HR	$ 18.00	38.00%	$ 1,651.86	
Dyllan Cain	16.5	HR	$ 18.00	38.00%	$ 409.86	
John Savage	16.5	HR	$ 18.00	38.00%	$ 409.86	
SUBTOTAL WITH BURDEN					$ 11,920.79	
MARKUP		15.0%			$ 1,788.12	
TOTAL LABOR COST					**$ 13,708.90**	

EQUIPMENT ESTIMATE

EQUIPMENT	QTY.	UNIT	RATE	AMOUNT	COMMENT
Crew Truck 2022 Dodge Crew 4x4	66.5	HR	$ 40.65	$ 2,703.23	
Excavator - JD 345 Zero Tail Swing	43.5	HR	$ 169.67	$ 7,380.65	
Mini Excavator - CAT 308	24.5	HR	$ 98.81	$ 2,420.85	
Loader - JD 544	41.5	HR	$ 77.28	$ 3,207.12	
Skid Steer - CAT 259D3	20.5	HR	$ 81.86	$ 1,678.13	
Concrete Saw	13	HR	$ 7.98	$ 103.74	
Plate Tamp - Wacker	8	HR	$ 18.90	$ 151.20	
Skid Steer - CAT 289	21		$ 76.01	$ 1,596.21	
				$ -	
EQUIPMENT SUBTOTAL				$ 19,241.12	
MARKUP		15.0%		$ 2,886.17	
TOTAL EQUIPMENT COST				**$ 22,127.28**	

MATERIALS ESTIMATE

ITEM	QTY.	UNIT	RATE	AMOUNT	COMMENT
				$ -	
MATERIALS SUBTOTAL				$ -	
SUBTOTAL W/TAX		7.5%		$ -	
MATERIALS SUBTOTAL				$ -	
MARKUP		15.0%		$ -	
TOTAL MATERIALS COST				$ -	

SUBCONTRACTS

NAME	QTY.	UNIT	RATE	AMOUNT	COMMENT
Sunbelt Labor	1	LS	$ 6,231.56	$ 6,231.56	
Sunbelt Equipment/Mobilization	1	LS	$ 12,336.09	$ 12,336.09	
APS Storm Pipe Pressure Grouting/Cleaning	1	LS	$ 7,505.00	$ 7,505.00	
				$ -	
SUBTOTAL SUBCONTRACTS				$ 26,072.65	
Markup (Callaway Allowable, on cost only)		10%		$ 1,856.76	Reduced APS' Billing by 15% to apply this markup since it was not broken down properly.
TOTAL SUBCONTRACTS				**$ 27,929.41**	

TOTALS

SUBTOTAL LABOR, EQUIPMENT, & MATERIALS	$ 63,765.60
TOTAL COST ESTIMATE:	**$ 63,765.60**

Prepared By:
Nathan Pearson
Assistant Project Administrator

3/13/2024
Date

DocuSign Envelope ID: DF316DC0-98D5-4229-B83F-419C0BD36770

PROJECT:	7th Street Drainage Improvements
CONTRACT NO:	70083-23
CHANGE ORDER NO.:	1
CONTRACTOR:	Callaway Contracting, Inc.
DESCRIPTION OF WORK:	Sewer Lateral Conflict
DATE:	

LABOR ESTIMATE

POSITION	QTY.	UNIT	RATE	BURDEN RATE %	AMOUNT	COMMENT
Foreman	18	HR	$ 42.50	50.00%	$ 1,147.50	
Skilled	35	HR	$ 42.50	50.00%	$ 2,231.25	
Fusion Welding Labor	32	HR	$ 42.50	50.00%	$ 2,040.00	
					$ -	
					$ -	
SUBTOTAL WITH BURDEN					$ 5,418.75	
MARKUP		15.0%			$ 812.81	
TOTAL LABOR COST					$ 6,231.56	

EQUIPMENT ESTIMATE

EQUIPMENT	QTY.	UNIT	RATE	AMOUNT	COMMENT
6" Trailer Mounted Centrifugal (Active)	128	HR	$ 41.58	$ 5,322.24	2 Pumps, 8hr/dy, 8 DY's
6" Trailer Mounted Centrifugal (Standby)	128	HR	$ 6.39	$ 817.92	2 Pumps, 8hr/dy, 8 DY's
JCB 505-20 Telehandler	18	HR	$ 132.02	$ 2,376.36	9 HR Delivery, 9 HR pickup
Ford 450 Flatbed	16	HR	$ 26.53	$ 424.48	8 HR Delivery, 8 HR pickup
Dodge 3500	8	HR	$ 19.84	$ 158.72	4 HR Delivery, 4 HR pickup
Gooseneck Trailer	8	HR	$ 25.68	$ 205.44	4 HR Delivery, 4 HR pickup
6" Trailer Mounted Centrifugal (Standby)	32	HR	$ 6.39	$ 204.48	
Fusion Welding Machine	4	DY	$ 350.00	$ 1,400.00	
EQUIPMENT SUBTOTAL				$ 10,909.64	
MARKUP		15.0%		$ 1,426.45	Sunbelts Markup is embedded within their pricing
TOTAL EQUIPMENT COST				$ 12,336.09	

MATERIALS ESTIMATE

ITEM	QTY.	UNIT	RATE	AMOUNT	COMMENT
				$ -	
				$ -	
MATERIALS SUBTOTAL				$ -	
SUBTOTAL W/TAX		7.5%		$ -	
MATERIALS SUBTOTAL				$ -	
MARKUP		15.0%		$ -	
TOTAL MATERIALS COST				$ -	

SUBCONTRACTS

NAME	QTY.	UNIT	RATE	AMOUNT	COMMENT
				$ -	
				$ -	
				$ -	
SUBTOTAL SUBCONTRACTS				$ -	
MARKUP		10%		$ -	
TOTAL SUBCONTRACTS				$ -	

TOTALS

SUBTOTAL LABOR, EQUIPMENT, & MATERIALS	$ 18,567.65
TOTAL COST ESTIMATE:	$ 18,567.65

Prepared By:
Nathan Pearson
Assistant Project Administrator

10/2/2023
Date

Nathan Pearson

From: Jim <jim@callawaycontracting.com>
Sent: Wednesday, May 1, 2024 9:39 AM
To: Nathan Pearson; Bobby
Cc: Reid Harriett; Landra Draper
Subject: RE: Proposed Gravity Sewer Lateral Estimate; 7th Street Drainage Improvements (COJ Contract No. 70089-23)

Nathan,

I will agree to this so that we can move on with the CO process.

Thank you,

Jim

From: Nathan Pearson <npearson@via-cs.com>
Sent: Tuesday, April 30, 2024 1:19 PM
To: Bobby <bobby@callawaycontracting.com>; Jim <jim@callawaycontracting.com>
Cc: Reid Harriett <rharriett@via-cs.com>; Landra Draper <ldraper@via-cs.com>
Subject: RE: Proposed Gravity Sewer Lateral Estimate; 7th Street Drainage Improvements (COJ Contract No. 70089-23)

Bobby/Jim,

Can you provide us an update on this item?

Thanks,

Nathan Pearson
Project Administrator
VIA Consulting Services, Inc. (DBE)
10250 Normandy Blvd, Suite 304
Jacksonville, FL, 32221
(904) 783-9842 (office)
(904) 859-6617 (mobile)

VIA CONSULTING SERVICES, INC.
http://www.via-cs.com
http://www.facebook.com/VIAcsinc

From: Nathan Pearson
Sent: Wednesday, April 24, 2024 11:19 AM

To: Bobby Walker <bobby@callawaycontracting.com>; Jim Callaway <jim@callawaycontracting.com>
Cc: Reid Harriett (rharriett@via-cs.com) <rharriett@via-cs.com>; Landra Draper <ldraper@via-cs.com>
Subject: Proposed Gravity Sewer Lateral Estimate; 7th Street Drainage Improvements (COJ Contract No. 70089-23)

Bobby/Jim,

I provided the hard-copy of this to Bobby on Friday at our progress meeting. Based on the numbers that Sunbelt provided, I've put together what I believe I can justify to the City for the sewer lateral work. In comparison of this estimate to your submitted invoice, the value of the estimate is within about $4,200 of the submitted costs (when corrected to meet the specifications). I've done everything I can when it comes to justification of costs that Sunbelt has submitted but their poor record submittals don't help any of us in this. The City is awaiting the final CO for this project to execute some contract value increases where needed so we need to get this resolved this week. Please take a look and let us know if you guys concur with the Estimate value.

Thank you,

Nathan Pearson
Project Administrator
VIA Consulting Services, Inc. (DBE)
10250 Normandy Blvd, Suite 304
Jacksonville, FL, 32221
(904) 783-9842 (office)
(904) 859-6617 (mobile)

VIA CONSULTING SERVICES, INC.
http://www.via-cs.com
http://www.facebook.com/VIAcsinc

DocuSign Envelope ID: DF316DC0-98D5-4229-B83F-419C0BD36770

Nathan Pearson

From: Bobby <bobby@callawaycontracting.com>
Sent: Friday, July 7, 2023 2:16 PM
To: Reid Harriett
Cc: Neal; Johnny; Nathan Pearson; Landra Draper; Tim Curry; Michael Keeney; Frederick Sumter (FSumter@coj.net); friebg@jea.com; Barber, Michael R.; Zastrocky, Ashlee R (External Contractor); Jim
Subject: RE: RFI #1 - Gravity Sewer Conflict; 7th Street Drainage Improvements (COJ Contract No. 70089-23)

Reid,
Our field guys have confirmed that this lateral is a 6" line not an 8"as the drawing shows. We will proceed with ordering parts for 6" DR18 PVC.

Sincerely,

Bobby Walker
Vice President of Construction

Callaway Contracting, Inc.
10950 New Berlin Rd
Jacksonville, FLorida 32226
Office - (904)751-8944
Fax - (904)751-0940
Cell - (904)446-7242

From: Reid Harriett <rharriett@via-cs.com>
Sent: Friday, July 7, 2023 10:44 AM
To: Bobby <bobby@callawaycontracting.com>
Cc: Neal <neal@callawaycontracting.com>; Johnny <Johnny@callawaycontracting.com>; Nathan Pearson <npearson@via-cs.com>; Landra Draper <ldraper@via-cs.com>; Tim Curry <tcurry@eismanrusso.com>; Michael Keeney <mkeeney@via-cs.com>; Frederick Sumter (FSumter@coj.net) <FSumter@coj.net>; friebg@jea.com; Barber, Michael R. <BarbMR@jea.com>; Zastrocky, Ashlee R (External Contractor) <zastar@jea.com>; Jim <jim@callawaycontracting.com>
Subject: RE: RFI #1 - Gravity Sewer Conflict; 7th Street Drainage Improvements (COJ Contract No. 70089-23)

Bobby,

Please see our responses below in red. If there are any further questions, please let us know.

Thanks,

Reid Harriett, P.E.
Senior Project Engineer
VIA Consulting Services, Inc.
rharriett@via-cs.com
(904)-451-7254 (Mobile)

DocuSign Envelope ID: DF316DC0-98D5-4229-B83F-419C0BD36770

Corporate Office
10250 Normandy Blvd., Suite 304
Jacksonville, Florida 32221
(904) 783-9842 (office)

SR-23 FCE Field Office
1421 South Orange Ave.
Green Cove Springs, Florida 32043
(904)-901-0800 (office)

From: Bobby <bobby@callawaycontracting.com>
Sent: Friday, July 7, 2023 10:04 AM
To: Reid Harriett <rharriett@via-cs.com>
Cc: Neal <neal@callawaycontracting.com>; Johnny <Johnny@callawaycontracting.com>; Nathan Pearson <npearson@via-cs.com>; Landra Draper <ldraper@via-cs.com>; Tim Curry <tcurry@eismanrusso.com>; Michael Keeney <mkeeney@via-cs.com>; Frederick Sumter (FSumter@coj.net) <FSumter@coj.net>; friebg@jea.com; Barber, Michael R. <BarbMR@jea.com>; Zastrocky, Ashlee R (External Contractor) <zastar@jea.com>; Jim <jim@callawaycontracting.com>
Subject: RE: RFI #1 - Gravity Sewer Conflict; 7th Street Drainage Improvements (COJ Contract No. 70089-23)

Reid,
Thank you for the quick response in resolving this conflict. Couple questions/clarifications needed.

1. **I understand we will be paid through Time and Materials, is this going through our JEA O&M contract?** No, It will be paid out of the COJ contract. The subject sewer lateral was found to be owned by COJ Public Buildings.
2. **This will require bypassing the sewer line coming from the City Health building and the sewer flow coming down 7th street. I would assume JEA will allow us to bypass directly into the JEA station within the parking lot.** That wasn't specifically discussed with JEA, but it would appear to be necessary unless a flow through plug can be used in the north 12" pipe inside the manhole. I believe this will also have to be replicated during the proposed gravity sewer main replacement in this manhole. Ashlee or Mike, please let us know if JEA has an objection to bypassing the flow into the lift station if required.
3. **For this sewer lateral it was mentioned to use PVC DR18, Bell restraint and Fittings, will the fittings need to be MJ P401 epoxy or C900 gasket fitting?** JEA APL approved C900 fittings are acceptable.

Sincerely,

Bobby Walker
Vice President of Construction

Callaway Contracting, Inc.
10950 New Berlin Rd
Jacksonville, FLorida 32226
Office - (904)751-8944
Fax - (904)751-0940
Cell - (904)446-7242

From: Reid Harriett <rharriett@via-cs.com>
Sent: Friday, July 7, 2023 9:02 AM
To: Jim <jim@callawaycontracting.com>
Cc: Bobby <bobby@callawaycontracting.com>; Neal <neal@callawaycontracting.com>; Johnny <Johnny@callawaycontracting.com>; Nathan Pearson <npearson@via-cs.com>; Landra Draper <ldraper@via-cs.com>; Tim Curry <tcurry@eismanrusso.com>; Michael Keeney <mkeeney@via-cs.com>; Frederick Sumter (FSumter@coj.net)

<FSumter@coj.net>; friebg@jea.com
Subject: RE: RFI #1 - Gravity Sewer Conflict; 7th Street Drainage Improvements (COJ Contract No. 70089-23)

Jim,

We held field meetings yesterday with JEA and COJ Public Buildings Officials and received approval to vertically adjust the sewer lateral to clear under the 42" RCP. I discussed this modification in concept with Neal yesterday, but I've summarized the details below. Please proceed with vertically adjusting the sewer lateral to resolve the conflict. Please note, we have designated this issue as RFI #1 for project documentation purposes.

Remove and replace approx. 40' of the existing 8" TC sewer lateral from JEA MH #36 to the north boundary of the curb island that's south of the trench line. The intent is to save the curb island. There is 1.60' of flow line elevation differential in MH #36 that will allow the sewer lateral to be lowered to clear under the RCP drainage pipe. Replace the sewer lateral with PVC DR-18 with bell restraints for added protection. In addition, please encase the sewer lateral pipe in excavatable flowable fill where it crosses under the drainage pipe as an additional protective measure. Use a JEA approved pipe coupler and 11.25 deg. fittings as needed to achieve the vertical adjustment that's needed to clear under the 42" RCP. The theoretical added vertical adjustment angle from the R&R limits is only approx. 2.5 degrees, so Callaway may be able to achieve that deflection in the pipe coupler and additional fittings may not be needed. Please try to achieve 6" vertical separation under the 42" RCP, or as much as possible while maintaining slope in the sewer lateral pipe. Core the existing manhole for the new pipe opening and plug the existing pipe opening using JEA approved materials. Please see the plan markup below depicting these details.

Callaway will be compensated for this additional work through tracked time and materials. Please have Callaway's field staff coordinate with our inspector to jointly track the time and materials associated with this work.

DocuSign Envelope ID: DF316DC0-98D5-4229-B83F-419C0BD36770

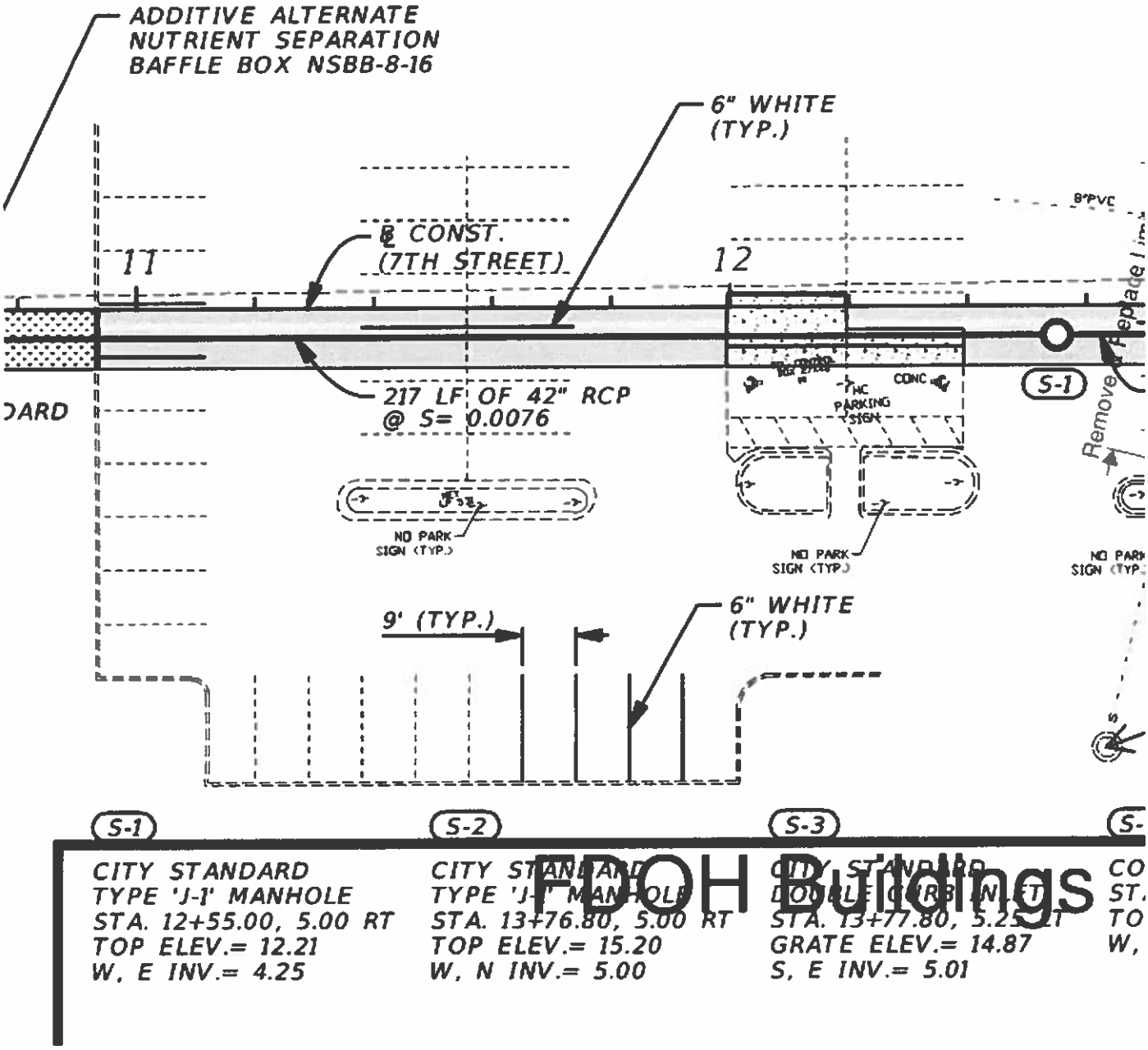

FDOH Buildings

If you have any questions, please let us know.

Thank You,

Reid Harriett, P.E.
Senior Project Engineer
VIA Consulting Services, Inc.
rharriett@via-cs.com

(904)-451-7254 (Mobile)

Corporate Office
10250 Normandy Blvd., Suite 304
Jacksonville, Florida 32221
(904) 783-9842 (office)

SR-23 FCE Field Office
1421 South Orange Ave.
Green Cove Springs, Florida 32043
(904)-901-0800 (office)

From: Jim <jim@callawaycontracting.com>
Sent: Wednesday, July 5, 2023 5:04 PM
To: Nathan Pearson <npearson@via-cs.com>; Reid Harriett <rharriett@via-cs.com>; Landra Draper <ldraper@via-cs.com>; Tim Curry <tcurry@eismanrusso.com>
Cc: Bobby <bobby@callawaycontracting.com>; Neal <neal@callawaycontracting.com>; Johnny <Johnny@callawaycontracting.com>
Subject: FW: 7th street drainage improvements sewer conflict

Nathan,

There is a direct conflict with our 42" RCP at STA 12+75.
The sewer going to the Health Department building is in the way of our installation.
Please tell us how to proceed, as this is now delaying the project.

Thank you,

Jim Callaway

From: Johnny <Johnny@callawaycontracting.com>
Sent: Wednesday, July 5, 2023 10:51 AM
To: Jim <jim@callawaycontracting.com>
Subject: 7th street drainage improvements sewer conflict

8" tc sewer pipe going from mh 36 to the central health plaza is in conflict with 42" rcp storm drain sta. 12+75.

Bottom of storm - EL. 3.91
Top of sewer - EL. 4.78

Sincerely,

Johnny Walker
Project Foreman

Callaway Contracting, Inc.
10950 New Berlin Rd
Jacksonville, FLorida 32226
Office - (904)751-8944
Fax - (904)751-0940
Cell - (904)762-8061

www.callawaycontracting.com

DocuSign Envelope ID: DF316DC0-98D5-4229-B83F-419C0BD36770

BEGIN BACKUP/NEGOTIATION DOCUMENTATION - FDOH SEWER LATERAL REPLACEMENT

DocuSign Envelope ID: DF316DC0-98D5-4229-B83F-419C0BD36770

CALLAWAY Contracting, Inc.

10950 New Berlin Road
Jacksonville, Florida 32226
(904) 751-8944 - Main
(904) 751-0940 - Fax

Invoice

1

9/30/2023

CUSTOMER	JOB NAME/LOCATION
COJ	7th Street Service Conflict - Time and Materials

ACCOUNT	P.O. NUMBER	CONTACT NAME	INVOICE DATE	TERMS	INVOICE NO.	PAGE NO.
	TBD	Nathan Pearson	09/29/23	Net 30	1	1

ITEM	QTY	UNIT	DESCRIPTION	UNIT PRICE	EXTENDED PRICE
2.02	0.00	MH	Field Superintendent	85.00	-
2.02	0.00	MH	Field Superintendent (O/T)	128.00	-
2.03	62.00	MH	Pipefitter Foreman	60.00	3,720.00
2.03	6.50	MH	Pipefitter Foreman (O/T)	90.00	585.00
2.04	64.00	MH	Pipefitter	33.00	2,112.00
2.04	5.50	MH	Pipefitter (O/T)	50.00	275.00
2.05	0.00	MH	Pipefitter Helper	30.00	-
2.05	0.00	MH	Pipefitter Helper (O/T)	45.00	-
2.06	86.00	MH	Laborer	26.00	2,236.00
2.06	12.50	MH	Laborer (O/T)	39.00	487.50
2.07	99.00	MH	Equipment Operator	33.00	3,267.00
2.07	8.00	MH	Equipment Operator (O/T)	50.00	400.00
2.08	0.00	MH	Truck Driver	30.00	-
2.08	0.00	MH	Truck Driver (O/T)	45.00	-
2.09	0.00	MH	Worksite Traffic Supervisor	30.00	-
2.09	0.00	MH	Worksite Traffic Supervisor (O/T)	45.00	-
2.10	0.00	MH	Flagger	26.00	-
2.10	0.00	MH	Flagger (O/T)	39.00	-
3.01	0.00	DY	Generator, 16KW	160.00	-
3.02	0.00	DY	Generator, 5.5KW	50.00	-
3.03	0.00	DY	Light Tower	150.00	-
3.04	4.50	DY	Loader - Wheel	500.00	2,250.00
3.05	0.00	DY	Pump - Trash Pump	50.00	-
3.06	0.00	DY	Pump, Diaphragm	150.00	-
3.07	0.00	DY	Air Compressor	75.00	-
3.08	3.00	DY	Compactor, Vibratory, Drum	250.00	750.00
3.09	0.00	DY	Trailer, 20 TN	100.00	-
3.10	0.00	DY	Backhoe - Wheel	350.00	-
3.10	0.00	HR	Backhoe - Wheel (O/T)	150.00	-
3.11	3.00	DY	Excavator - up to 20TN, Hydraulic, 0.5 cy	475.00	1,425.00
3.11	0.50	HR	Excavator - up to 20TN, Hydraulic, 0.5 cy (O/T)	175.00	87.50
3.12	0.00	DY	Excavator, over 20t, Hydraulic, 1.0 cy	550.00	-

3.12	0.00	EA	Excavator, over 20t, Hydraulic, 1.0 cy (Mob or Demob)	600.00	-
3.12	0.00	HR	Excavator, over 20t, Hydraulic, 1.0 cy (O/T)	200.00	-
3.13	0.00	DY	Excavator, over 20t, Hydraulic, 1.5 cy	650.00	-
3.13	0.00	EA	Excavator, over 20t, Hydraulic, 1.5 cy (Mob or Demob)	750.00	-
3.13	0.00	HR	Excavator, over 20t, Hydraulic, 1.5 cy (O/T)	250.00	-
3.14	4.75	DY	Excavator, over 20t, Hydraulic, 2.5 cy	850.00	4,037.50
3.14	0.00	EA	Excavator, over 20t, Hydraulic, 2.5 cy (Mob or Demob)	900.00	-
3.14	5.50	HR	Excavator, over 20t, Hydraulic, 2.5 cy (O/T)	325.00	1,787.50
3.15	4.75	DY	Skid Steer	450.00	2,137.50
3.15	3.00	HR	Skid Steer (O/T)	175.00	525.00
3.16	0.00	DY	Sweeper, Pavement	325.00	-
3.16	0.00	HR	Sweeper, Pavement (O/T)	125.00	-
3.17	0.00	DY	Truck, Dump 12 CY	550.00	-
3.17	0.00	HR	Truck, Dump 12 CY (O/T)	225.00	-
3.18	0.00	DY	Truck, Dump 8 CY	325.00	-
3.18	0.00	HR	Truck, Dump 8 CY (O/T)	150.00	-
3.19	4.75	DY	Truck, Flatbed	325.00	1,543.75
3.19	5.50	HR	Truck, Flatbed (O/T)	150.00	825.00
			Subtotal - Labor & Equipment		**28,451.25**
F	15.00%		**Overhead Markup - 15%**	28,451.25	**4,267.69**
G	12.50%		**Profit Markup - 12.5%**	28,451.25	**3,556.41**
				-	-
			Subtotal - Material		-
C	7.50%		**Overhead and Profit Markup - 7.5%**	-	-
				-	-
	1.00	LS	Sunbelt Rentals - Bypass Pump Installation, Rental and Removal	24,995.33	24,995.33
				-	-
			Subtotal - Subcontracts		**24,995.33**
D	35.00%		**Overhead and Profit Markup - 35%**		**8,748.37**
				-	-
			Subtotal - Equipment Rental		-
E	35.00%		**Overhead and Profit Markup - 35%**		-
Other Comments:				SUBTOTAL	**70,019.04**
				TOTAL	**$ 70,019.04**

THANK YOU

CALLAWAY'S SUBMITTED COST PROPOSAL (NON-COMPLIANT WITH SPECIFICATIONS)

DocuSign Envelope ID: DF316DC0-98D5-4229-B83F-419C0BD36770

SUNBELT RENTALS

INVOICE

SEND ALL PAYMENTS TO:
SUNBELT RENTALS, INC
PO BOX 409211
ATLANTA, GA 30384-9211

INVOICE NUMBER	142314399-0001
ACCOUNT NUMBER	2815
INVOICE DATE	7/31/23
PAGE	1

INVOICE TO
CALLAWAY CONTRACTING INC
10950 NEW BERLIN ROAD
JACKSONVILLE, FL 32226

JOB ADDRESS
515 W 6TH ST, JACKSONVILLE
CALLAWAY CONTRACTING INC
515 W 6TH ST
JACKSONVILLE, FL 32206 4324

C#: 904-751-8944 J#: 904-762-8061

RECEIVED BY: DUKES, NEAL
CONTRACT NUMBER: 142314399
PURCHASE ORDER NUMBER: BYPASS PUMPS
JOB NUMBER: 171 CALLAWAY CONTRAC
BRANCH: 1153 NORTH FLORIDA PUMP SOLUTIONS
2505 IMESON RD
JACKSONVILLE, FL 32220 2459
904-701-5905

Date	Ticket #	Eqp/Itm #	Description	Hr/Qty	Price	Amount
			BYPASS PUMP RENTAL 7/19-7/27 (ONE WEEK RENTAL PERIOD)			7393.80
			MOBILIZATION (FREIGHT)			4095.24
			ERECTION & DISMANTLE LABOR			12081.54
						23570.58

Job# 2302
Phase# 24
Approved by: BW
Date 8/29/2023

COPY

COPY
Downloaded

RECEIVED
AUG 2 3 2023
BY: .....

COPY

SUBTOTAL	23570.58
TAX	1424.75
INVOICE TOTAL	24995.33

MANUAL INVOICE

NET 30

ROSANIE HOWELL rosanie.howell-ashley@sunbeltrentals.com

SUNBELT'S COST JUSTIFICATION (NON-COMPLIANT)

PDFWS7 (Rev 01/31/22)

DocuSign Envelope ID: DF316DC0-98D5-4229-B83F-419C0BD36770

Nathan Pearson

From: Nathan Pearson
Sent: Friday, December 1, 2023 2:33 PM
To: Jim
Cc: Reid Harriett; Landra Draper; Tim Curry; Lisa; Bobby; Sumter, Frederick
Subject: RE: Sewer Conflict COR Comments (For Correction); 7th Street Drainage Improvements (COJ Contract No. 70089-23)

Jim,

In our review of the FDOH building sewer lateral cost submittal we have found the following items that require modifications to comply with the project specifications (see spec(s) 20.34.2 & 20.34.4).

- Actual labor rates for each labor class are required. (15% markup allowable on labor)
- Actual labor burden rates are required to be shown separate from the base labor rate.
- Overtime hours cannot be paid given the work records showing work to have been performed within the first 3 days of the week and never in excess of 40 hours.
- Equipment information such as make and model should be denoted.
- Equipment rates should be blue-book values. If you cannot attain these, we can help to get them. (no markup allowable on equipment, only reasonable operated and maintained monthly rental prices shall be paid)
- Sunbelt's cost will need to be itemized to show their labor and equipment cost and then their applicable markup (capped at 15%), Callaway is allowed 10% markup on Sunbelt's cost only.
- The pump rental from Sunbelt needs to be broken out to show equipment type, # used, and the rates for each.
- The mobilization cost from sunbelt needs to be itemized.
- The labor and equipment hours submitted for 7/17/23 exceed the 2 hours for labor and 1 hour each for the Excavator and Loader as noted on the T&M sheets signed in the field. Since a majority of this day was spent waiting on Sunbelt to deliver pumps, the labor and equipment time in excess of 2 hours should be their expense and not the City's.
- The pipe materials and MAX couplers do not appear to be listed in the materials section. A 15% markup is allowable on materials.

In addition to these items, the time extensions that have been discussed need to be noted for each item. Since there are a couple of outstanding issues that are warranting a time extension, each of these items needs a contract time (non-compensable days) assigned to it for consideration.

In regards to the VMS boards. An invoice from ACME was submitted showing the cost of $18.00/DY. Since the initial request to have the have the VMS boards in place denoted a 7-day advance notice and for them to remain in place for 7-days after the detour began (as noted in multiple progress meeting agenda), the reimbursement for these must be capped at 14 days for 2 units. Reimbursement for these can be provided at $18.00/unit/dy x 2 units x 14 days = $504.00

Please take a look at these items and let me know if you have any questions on them. Please make sure to break out the revised cost submittal per the COJ specifications.

Thank you,

Nathan Pearson
Project Administrator
VIA Consulting Services, Inc. (DBE)
10250 Normandy Blvd, Suite 304

Jacksonville, FL, 32221
(904) 783-9842 (office)
(904) 859-6617 (mobile)

VIA CONSULTING SERVICES, INC.

http://www.via-cs.com
http://www.facebook.com/VIAcsinc

From: Jim <jim@callawaycontracting.com>
Sent: Friday, September 29, 2023 4:15 PM
To: Nathan Pearson <npearson@via-cs.com>
Cc: Reid Harriett <rharriett@via-cs.com>; Landra Draper <ldraper@via-cs.com>; Tim Curry <tcurry@eismanrusso.com>; Lisa <Lisa@callawaycontracting.com>; Bobby <bobby@callawaycontracting.com>
Subject: RE: 7th Street Drainage Improvements (COJ Contract No. 70089-23) Pay Application #5

Nathan

Please see the attached Pay Application #5, JSEB form, Schedule Update, Ex-Offender Report, and progress photos. Also attached is the invoice for the time and material conflict work, with all of the backup documentation including daily report and subcontractor's invoice.

Please let me know if you have any questions or need anything further.

Thank you,

Jim Callaway

DocuSign Envelope ID: DF316DC0-98D5-4229-B83F-419C0BD36770

CALLAWAY'S SUBMITTED LABOR AND BURDEN RATES (SUBMITTED 4/2/24)

CALLAWAY Contracting, Inc.

Hourly Rates

DESCRIPTION	Hourly Rate	Burden	Total
Foreman	$ 44.50	38%	$ 61.41
Pipelayer	$ 21.00	38%	$ 28.98
Tailman	$ 19.50	38%	$ 26.91
Laborer	$ 18.00	38%	$ 24.84
Equipment Operator	$ 23.00	38%	$ 31.74
Truck Driver	$ 21.00	38%	$ 28.98
Loader - Wheel	$ 56.70		
Compactor, Vibratory, Drum	$ 30.51		
Trailer, 20 TN	$ 19.05		
Backhoe - Wheel	$ 44.60		
Excavator - up to 20TN, Hydraulic, 0.5 cy	$ 48.97		
Excavator, over 20t, Hydraulic, 2.5 cy	$ 135.52		
Skid Steer	$ 43.65		
Sweeper, Pavement	$ 45.23		
Truck, Dump 12 CY	$ 56.60		
Truck, Pickup	$ 36.50		

DocuSign Envelope ID: DF316DC0-98D5-4229-B83F-419C0BD36770

VIA T&M DOCUMENTATION FROM WORK ON-SITE

Daily Record of Extra Work Site Source Record

Date: 7-7-23

COJ Project ID No.: 70089-23
Project Name / Road No.: 7th Street Drainage Improvements
NOTE: Report Prime, Sub, and Subordinate Sub work efforts on separate sheets.

Prime: Callaway Contracting, Inc. Sub: _____ 2nd Tier Sub: _____

Description of Work Done this Date:

Saw cut from the sewer manhole to the island. Removed trench box and took it apart.

LABOR		
NUMBER	POSITION	TOTAL HOURS
1	Foreman	3
3	Skilled	3

EQUIPMENT		
NO. UNITS	MAKE & MODEL	TOTAL HOURS
1	Concrete Saw	3

MATERIAL USED		
QUANTITY	KIND	TOTAL USED

Inspector: Tim Curry. Signature: [signature]

Foreman: Johnny Walker Signature: [signature]

DocuSign Envelope ID: DF316DC0-98D5-4229-B83F-419C0BD36770

Daily Record of Extra Work Site Source Record

Date: 7-10-23

COJ Project ID No.: 70089-23
Project Name / Road No.: 7th Street Drainage Improvements
NOTE: Report Prime, Sub, and Subordinate Sub work efforts on separate sheets.

Prime: Callaway Contracting, Inc. Sub: _____ 2nd Tier Sub: _____

Description of Work Done this Date:

~~Started prep work for well point system~~ Put in

Installed 4 well points

LABOR		
NUMBER	POSITION	TOTAL HOURS
	Foreman	2
4	Skilled	2

EQUIPMENT		
NO. UNITS	MAKE & MODEL	TOTAL HOURS
1	Excavator	2
1	Skid Steer	2

MATERIAL USED		
QUANTITY	KIND	TOTAL USED
1 cu yd	Well Point Sand	

Inspector: Tim Curry Signature: [signature]

Foreman: Johnny Walker Signature: [signature]

DocuSign Envelope ID: DF316DC0-98D5-4229-B83F-419C0BD36770

Daily Record of Extra Work Site Source Record

Date: 7-11-23

COJ Project ID No.: 70089-23
Project Name / Road No.: 7th Street Drainage Improvements
NOTE: Report Prime, Sub, and Subordinate Sub work efforts on separate sheets.

Prime: Callaway Contracting, Inc. Sub: _____ 2nd Tier Sub: _____

Description of Work Done this Date:

Re-fabricate trench box for sewer conflict

LABOR		
NUMBER	POSITION	TOTAL HOURS
1	Foreman	2
1	Skilled	2

EQUIPMENT		
NO. UNITS	MAKE & MODEL	TOTAL HOURS
1	Excavator	2
1	Frontend Loader	2
1	Skid Steer	2

MATERIAL USED		
QUANTITY	KIND	TOTAL USED

Inspector: Tim Curry Signature: [signature]

Foreman: Johnny Walker Signature: [signature]

DocuSign Envelope ID: DF316DC0-98D5-4229-B83F-419C0BD36770

Daily Record of Extra Work Site Source Record

Date: 7-17-23

COJ Project ID No.: 70089-23
Project Name / Road No.: 7th Street Drainage Improvements
NOTE: Report Prime, Sub, and Subordinate Sub work efforts on separate sheets.

Prime: Callaway Contracting, Inc. Sub: Sunbelt 2nd Tier Sub:

Description of Work Done this Date:

Sunbelt arrived onsite to deliver 4 pumps and the other materials for the sewer deflection didn't arrive yet. Closed off a handicap spot and placed two pumps there.

LABOR

NUMBER	POSITION	TOTAL HOURS
1	Foreman	2
3	Skilled	2
1	~~Excavator~~	1
1	~~Frontend Loader~~	1

EQUIPMENT

NO. UNITS	MAKE & MODEL	TOTAL HOURS
1	Excavator	1
1	Frontend Loader	1

MATERIAL USED

QUANTITY	KIND	TOTAL USED

Inspector: Tim Curry Signature:

Foreman: Johnny Walker Signature:

DocuSign Envelope ID: DF316DC0-98D5-4229-B83F-419C0BD36770

Daily Record of Extra Work Site Source Record

Date: 7-18-23

COJ Project ID No.: 70089-23
Project Name / Road No.: 7th Street Drainage Improvements
NOTE: Report Prime, Sub, and Subordinate Sub work efforts on separate sheets.

Prime: Callaway Contracting, Inc. Sub: ~~Soo~~ Sunbelt 2nd Tier Sub:

Description of Work Done this Date: Sunbelt arrived onsite with the rest of the materials for the sewer deflection. One guy from Sunbelt helped Calloway set up the ~~bypa~~ bypass system

LABOR		
NUMBER	POSITION	TOTAL HOURS
1	Foreman	11.5
4	Skilled	11.5
SB 1	Skilled	9

EQUIPMENT		
NO. UNITS	MAKE & MODEL	TOTAL HOURS
1	Skid Steer	11.5
1	Excavator	2
5	Hand Tools	11.5

MATERIAL USED		
QUANTITY	KIND	TOTAL USED

Inspector: for Tim Curry Signature:

Foreman: Johnny Walker Signature:

DocuSign Envelope ID: DF316DC0-98D5-4229-B83F-419C0BD36770

Daily Record of Extra Work Site Source Record

Date: 7-19-23

COJ Project ID No.: 70089-23
Project Name / Road No.: 7th Street Drainage Improvements
NOTE: Report Prime, Sub, and Subordinate Sub work efforts on separate sheets.

Prime: Callaway Contracting, Inc. Sub: ~~Sco~~ Sunbelt 2nd Tier Sub:

Description of Work Done this Date: Sunbet was onsite to fix the bypass system that wasn't working

LABOR		
NUMBER	POSITION	TOTAL HOURS
3	Skilled	8

EQUIPMENT		
NO. UNITS	MAKE & MODEL	TOTAL HOURS
1	Truck	8
3	Hand Tools	8

MATERIAL USED		
QUANTITY	KIND	TOTAL USED

Inspector: Tim Curry Signature:

Foreman: Johnny Walker Signature:

DocuSign Envelope ID: DF316DC0-98D5-4229-B83F-419C0BD36770

Daily Record of Extra Work Site Source Record

Date: 7-~~25~~ 24-23

COJ Project ID No.: 70089-23
Project Name / Road No.: 7th Street Drainage Improvements
NOTE: Report Prime, Sub, and Subordinate Sub work efforts on separate sheets.

Prime: Callaway Contracting, Inc. Sub: _____ 2nd Tier Sub: _____

Description of Work Done this Date: Removed the existing terracotta pipe, then used a Max Adapter to connect to the existing PVC pipe. Installed 20' of DR-18 pipe.

LABOR		
NUMBER	POSITION	TOTAL HOURS
1	Foreman	8
4	Skilled	8

EQUIPMENT		
NO. UNITS	MAKE & MODEL	TOTAL HOURS
1	Excavator	8
1	Mini Excavator	8
1	Frontend Loader	8
1	Skid Steer	8
1	Concrete Saw	8
1	Plate Tamp	8
4	Hand Tools	8

MATERIAL USED		
QUANTITY	KIND	TOTAL USED
1 - 20'	DR-18 Pipe	1
1	Max Adapter	1

Inspector: Tim Curry Signature: [signature]

Foreman: Johnny Walker Signature: [signature]

DocuSign Envelope ID: DF316DC0-98D5-4229-B83F-419C0BD36770

Daily Record of Extra Work Site Source Record

Date: 7-25-23

COJ Project ID No.: 70089-23
Project Name / Road No.: 7th Street Drainage Improvements
NOTE: Report Prime, Sub, and Subordinate Sub work efforts on separate sheets.

Prime: Callaway Contracting, Inc. Sub: _____ 2nd Tier Sub: _____

Description of Work Done this Date:

Installed 12 well points

LABOR		
NUMBER	POSITION	TOTAL HOURS
1	Foreman	6
4	Skilled	6

EQUIPMENT		
NO. UNITS	MAKE & MODEL	TOTAL HOURS
1	Excavator	6
1	Skid Steer	6

MATERIAL USED		
QUANTITY	KIND	TOTAL USED
2 cu yds	Well Point Sand	

Inspector: Tim Curry Signature: [signature]

Foreman: Johnny Walker Signature: [signature]

DocuSign Envelope ID: DF316DC0-98D5-4229-B83F-419C0BD36770

Daily Record of Extra Work Site Source Record

Date: 2-26-23

COJ Project ID No.: 70089-23
Project Name / Road No.: 7th Street Drainage Improvements
NOTE: Report Prime, Sub, and Subordinate Sub work efforts on separate sheets.

Prime: Callaway Contracting, Inc. Sub: _____ 2nd Tier Sub: _____

Description of Work Done this Date:

Installed 20' of DR-18 pipe
Modded the pipe to existing structure
Cut storm drain ~~pi~~ 18" storm drain pipe and fixed it using 2 rubber sleeves and 2 collar restraints.
Placed #57 stone

LABOR

NUMBER	POSITION	TOTAL HOURS
1	Foreman	10
6	Skilled	10

EQUIPMENT

NO. UNITS	MAKE & MODEL	TOTAL HOURS
1	Excavator	10
1	Frontend Loader	10
1	Skid Steer	10
1	Concrete Saw	10
6	Hand Tools	10

MATERIAL USED

QUANTITY	KIND	TOTAL USED
1-20'	DR-18 Pipe	1
1	Restraint	1
3	Bags of Cement	3
2	Rubber Sleeves	2
2	Collar Restraints	2

Inspector: Tim Curry Signature: [signature]

Foreman: Johnny Walker Signature: [signature]

DocuSign Envelope ID: DF316DC0-98D5-4229-B83F-419C0BD36770

BREAK PAGE

PLAN REVISION(S) 01 - ADDED CURB INLETS, VMS BOARDS AT COJ TRAFFIC ENG. REQUEST

Nathan Pearson

From:	Sumter, Frederick <FSumter@coj.net>
Sent:	Friday, January 12, 2024 4:01 PM
To:	Nathan Pearson
Cc:	Reid Harriett
Subject:	FW: RFI #08 - Roadway Reconstruction Profile & Details; 7th Street Drainage Improvements (COJ Contract No. 70089-23)
Attachments:	2024-01-12 7th Street W - Profile Exhibits.pdf; 2024-01-12 EXHIBIT_PLPRRD01.dwg; 2024-01-12 EXHIBIT_PLPRRD02.dwg

Nathan,

Please see John Baxter comments below. Please let me know if you need anything additional.

From: Baxter, John <JBaxter@coj.net>
Sent: Friday, January 12, 2024 3:32 PM
To: Sumter, Frederick <FSumter@coj.net>
Subject: FW: RFI #08 - Roadway Reconstruction Profile & Details; 7th Street Drainage Improvements (COJ Contract No. 70089-23)

Fred,
I am ok with this update for construction. This update adds two curb inlets and 29 lf of15 inch, tieing into manhole S-12 described on sheet number 9.

From: John Moye <jmoye@wmice.com>
Sent: Friday, January 12, 2024 3:23 PM
To: Baxter, John <JBaxter@coj.net>
Cc: Sumter, Frederick <FSumter@coj.net>
Subject: RE: RFI #08 - Roadway Reconstruction Profile & Details; 7th Street Drainage Improvements (COJ Contract No. 70089-23)

EXTERNAL EMAIL: This email originated from a non-COJ email address. Do not click any links or open any attachments unless you trust the sender and know the content is safe.

John,
Attached are the updated sheets showing the inverts.

Kindest Regards,

John H. Moye, P.E.
WAITZ&MOYE
Phone (904) 642-8311, Ext. 105
Email: jmoye@wmice.com
3738 Southside Boulevard Suite 101, Jacksonville, Fl 32216

DocuSign Envelope ID: DF316DC0-98D5-4229-B83F-419C0BD36770

ACME BARRICADES

Send Payments To:
Acme Barricades LC
Attn: Accounts Receivable
9800 Normandy Blvd., Jacksonville, FL 32221-2036
Tel: (904) 781-1950 Fax: (904) 781-1921
Federal Tax ID #59-3541899

INVOICE

Invoice No 160869
Date 07/31/23

Orlando Division	Panhandle Division	Tampa Division	Miami Division	West Palm Beach
508 Clifton St	1675 Commerce Blvd	2611 South 82nd Street,	4601 Oakes Road	3705 Interstate Pkwy
Orlando, FL 32808	Midway, Florida 32343	Tampa .FL 33619	Davie, FL 33314	West Palm Beach, FL 33404
Tel: (407) 253-4337	Tel:(850) 765-8546	Tel: (813) 623-ACME	Tel: (954)-321-8205	Tel: (561)-657-8222
Fax: (407) 253-1342	Fax:(850) 765-8549	Fax: (813) 623-2045	Fax: (954)-791-0921	Fax: (561)-657-8226

Callaway Contracting
10950 New Berlin Road
Jacksonville, FL 32226

Job No
P.O. #
ACME Job 26855
Email *Lisa@callawaycontracting.com

Customer Phone 904-751-8944
Customer Fax 904-751-0940

REF: 7TH STREET

Terms Net 30

Item	Equipment and Labor	From	To	Hrs/Days	Qty	Price	Amount
Rentals:							
ABBB	Type II w/o light	07/01/23	07/31/23	31	8		
CC	Drum w/o light	07/01/23	07/31/23	31	8		
CCCC	Type III w/o light	07/01/23	07/31/23	31	20		
E	Message Board	07/01/23	07/31/23	31	2	$18.00	$1,116.00
EEE	Large Sign Portable	07/01/23	07/31/23	31	40		
MMMM	Water Filled Barrier Wall	07/01/23	07/31/23	31	50		
					Rentals:	**Subtotal**	
						Tax	

Job# 2302
Phase# 05
Approved by:
Date 8/9/23

RECEIVED
AUG 2023
BY:

Progress Bill

Total Amount
Total Taxes
Invoice Total

DocuSign Envelope ID: DF316DC0-98D5-4229-B83F-419C0BD36770

BREAK PAGE

PAY ITEM OVERRUNS 01 - CIPP (24" BRICK PIPE LINING), & 8" CONCRETE PAVEMENT

DocuSign Envelope ID: DF316DC0-98D5-4229-B83F-419C0BD36770

Nathan Pearson

From:	Nathan Pearson
Sent:	Tuesday, March 12, 2024 7:40 PM
To:	Lori West - COJ (LWEST@coj.net); Sumter, Frederick
Cc:	Reid Harriett (rharriett@via-cs.com); Landra Draper
Subject:	AFP #10 (Through 2/29/24); 7th Street Drainage Improvements (COJ Contract No. 70089-23)
Attachments:	AFP #10; 7th St Drainage Improvements (COJ 70089-23) 2-29-24.pdf

Fred/Lori,

Please see attached for Callaway's AFP for work through February 2024 on the subject project. As we discussed earlier this week, the CIPP item is being slightly overrun due to a discrepancy in the quantity called-out in our plans and what was shown on the bid form. A Change Order is in draft status pending the finalization of some cost discussions and should be provided soon in order to increase the funding available for the project with the many changes we have encountered. Let us know if there are any questions.

Thank you,

Nathan Pearson
Assistant Project Administrator
VIA Consulting Services, Inc. (DBE)
10250 Normandy Blvd, Suite 304
Jacksonville, FL, 32221
(904) 783-9842 (office)
(904) 859-6617 (mobile)

VIA CONSULTING SERVICES, INC.

http://www.via-cs.com
http://www.facebook.com/VIAcsinc

8" Concrete Pavement Takeoff/Justification

The 8" Concrete Pavement in the below snip from the project plans was constructed to exceed the limits shown in the plans due to a concern with a rapid transition in the elevation between the asphalt and concrete causing issues with the ADA accessibility that the concrete is intended to provide. An overrun of 11 SY was agreed upon by the project team based on field measurements of the constructed area.

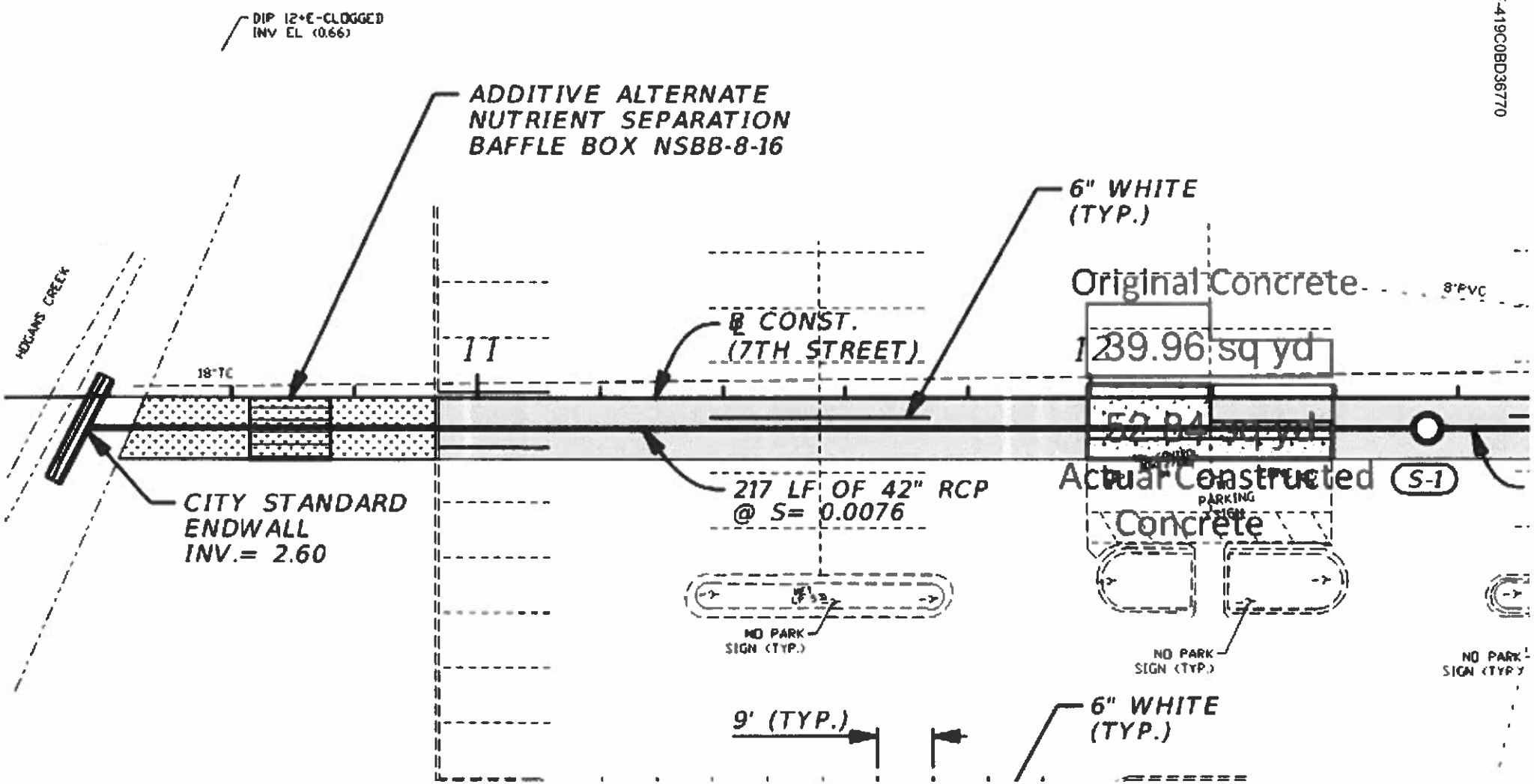

DocuSign Envelope ID: DF316DC0-98D5-4229-B83F-419C0BD36770

SUBJECT: 7th STREET DRAINAGE IMPROVEMENTS

BID #: CP-0152-22 **OPEN DATE:** 10/12/22

GENERAL GOVERNMENT AWARDS COMMITTEE

KIND AND BASIS OF CONTRACT: CONSTRUCTION SERVICE – FROM DATE OF AWARD UNTIL COMPLETION

AGENCY: PUBLIC WORKS

BASIS OF AWARD: LOWEST RESPONSIVE, RESPONSIBLE BIDDER- BY GROUP

NUMBER OF BIDS INVITED: 39 NUMBER RECEIVED: 3 OTHER: 0

SUMMARY OF BIDS AND RECOMMENDED ACTIONS:
Recommend approval to award to Callaway Contracting, Inc. as the lowest responsive, responsible bidder for parts A through C. Part D will not be awarded at this time. Part A will be funded by the City of Jacksonville in the amount $1,822,260.18. Part B and C will be fundied by JEA in the amount $194,866.18. Total expenditure amount not the exceed $2,017,126.36. Period of service will be from date of award until completion

Funding Source: 32111.153101.565051.010386.00000000.00000.0000000 - $1,496,659.44
32124.153119.565051.010386.00000000.00000.0000000 - $325,600.74 - to be executed by Purchase Order.

Attachments: Recommendation Memo, Bid Tabulations, Scope of Work

Analyst: JACLYN STAMOS **RESPECTFULLY SUBMITTED:** DUSTIN FREEMAN, CHIEF PROCUREMENT DIVISION

CONCURRENCE BY: Robin Smith, P.E., Chief, Engineering and Construction

---

(ALL AWARD ACTIONS SUBJECT TO LAWFULLY APPROPRIATED FUNDS)
ACTION OF GGAC COMMITTEE ON RECOMMENDATIONS ABOVE

MEMBERS APPROVING 3 MEMBERS DISAPPROVING 0 DATE: 11/3/2022

OTHER:

ACTION OF AWARDING AUTHORITY DATE 11-4-2022

APPROVED ✓ DISAPPROVED

OTHER

SIGNATURE OF AUTHENTICATION

Brian Hughes
Chief Administrative Officer
For: Mayor Lenny Curry
Under Authority of:
Executive Order No: 2019-02