SUBJECT: **RFQ FOR DESIGN-BUILD SVCS FOR HORIZONTAL/CIVIL ENGINEERING PROJECTS**

BID # **CDB-0006-16** OPEN DATE: **10/21/2015**

COMPETITIVE SEALED PROPOSAL EVALUATION COMMITTEE

KIND AND BASIS OF CONTRACT:
CONSTRUCTION – DESIGN/BUILD

AGENCY: **DEPARTMENT OF PUBLIC WORKS**

BASIS OF AWARD: **QUALIFICATIONS BASED**

NUMBER OF BIDS INVITED: - NUMBER RECEIVED: - OTHER: -

SUMMARY OF BIDS AND RECOMMENDED ACTIONS:

The Department of Public Works has completed negotiations with J.B. Coxwell Contracting, Inc., for the Hartley Road-Deep Bottom Creek Drainage Improvements project in accordance with subject bid.

Recommend approval of award to J. B. Coxwell Contracting, Inc., in the guaranteed maximum price not-to-exceed $1,798,431.78 which includes $35,000.00 in contingency. The scope of award is to provide 100% design, permitting and construction for the Hartley Road-Deep Bottom Creek Drainage Improvements project. This incorporates the attached, scope and fee summary, Exhibit "EE-1", and allows for project completion of 150 days from issuance of notice-to-proceed for the design and permitting phase and 180 days for construction for total project duration of 330 calendar days. Total annual expenditure amount is currently at $18,000,000.00; total amount spent to date is $16,168,794.70.

Funding for this award is to be executed by Amendment 29A for contract # 6533-54 and encumbered by account: PWCP351SD541-06504-PW0385-01

Attachments: Recommendation Memo, Exhibit "EE-1", Previous Award(s)

BUYER Marilyn Laidler
MARILYN LAIDLER

RESPECTFULLY SUBMITTED
GREGORY PEASE, CHIEF
PROCUREMENT DIVISION

CONCURRENCE BY: **Robin G. Smith, P.E., Chief, Engineering and Construction Management**

(ALL AWARD ACTIONS SUBJECT TO LAWFULLY APPROPRIATED FUNDS)
ACTION OF CSPEC COMMITTEE ON RECOMMENDATIONS ABOVE

MEMBERS APPROVING_____ MEMBERS DISAPPROVING_____ DATE:_____

_____ _____ OTHER_____

_____ _____

_____ _____

_____ _____

_____ _____

ACTION OF AWARDING AUTHORITY DATE _____

APPROVED_____ DISAPPROVED: _____

OTHER: _____

SIGNATURE OF AUTHENTICATION _____

City of Jacksonville, Florida

Lenny Curry, Mayor

Department of Public Works
Engineering & Construction Management Division
214 N. Hogan Street, 10th Floor
Jacksonville, FL 32202
(904) 255-8762
www.coj.net

ONE CITY. ONE JACKSONVILLE.

September 16, 2019

TO: Gregory W. Pease
Chief of Procurement

THRU: John P. Pappas, P.E.
Director

FROM: Robin G. Smith, P.E.
Chief, Engineering and Construction Management

SUBJECT: CDB-0006-16 – Design-Build Services - Horizontal & Civil Engineering – Hartley Road-Deep Bottom Creek Drainage Improvements
AMENDMENT 29A

Based on the Design Criteria Package developed by GAI Consultants, Inc. and City Engineers, the Department of Public Works, in accordance with Design/Build CDB-0006-16, Contract No. 6533-54 has completed negotiations with J. B. Coxwell Contracting, Inc., to provide 100% design, permitting and construction for the Hartley Road-Deep Bottom Creek Drainage Improvements. Negotiations have resulted in the attached Scope and Fee, Exhibit EE-1 for the GMP amount of $1,798,431.78, which includes $35,000.00 in contingency and allows for project completion 150 days from the notice to proceed for the design and permitting phase and 180 days for construction for a total project duration of 330 calendar days. J. B. Coxwell Contracting is committed to meeting the 10% JSEB participation goals established for this contract.

Accordingly, this is to recommend that Contract No. 6533-54, originally executed May 2, 2016, between the City and J. B. Coxwell Contracting, Inc. for Design-Build Services- Horizontal & Civil Engineering, be amended to incorporate the attached Scope and Fee Summary, Exhibit EE-1 for the Hartley Road-Deep Bottom Creek Drainage Improvements Project for the GMP amount of $1,798,431.78, known as Amendment 29A.

To be encumbered as follows:

PWCP351SD541-06504-PW0385-01	$1,798,431.78
TOTAL	$1,798,431.78

RGS/lw

Attachment: Exhibit EE-1

ob

EXHIBIT EE-1

J.B. Coxwell Contracting, Inc.
6741 Lloyd Road West
Jacksonville, Florida 32254
Office (904) 786-1120 Fax (904) 783-2970

June 08, 2019

Michael Derbaum, P.E.
City of Jacksonville Department of Public Works
Engineering & Construction Management Division
214 N. Hogan Street, 10th Floor
Jacksonville, Florida 32202

Re: Fee Proposal for Hartley Road/ Deep Bottom Creek Drainage Improvements (Partial Scope) Design-Build Construction Delivery for City of Jacksonville-RFQ CDB-0049-09 City Contract No. 6533-54

Dear Mr. Derbaum:

J.B. Coxwell Contracting, Inc. (JBCCI) is pleased to submit for your review and consideration the following lump sum fee proposal for the drainage improvements associated with the above referenced project. The general scope of work consists of the regrading of multiple existing ditches, installation of new storm pipe across Hartley Road, and the construction of a new stormwater management pond. Additional details about the specific scope of work for the proposed construction are as outlined on the attached proposals and schedule of values.

As detailed on the attached schedule of values (dated 6-8-19), the proposed total lump sum amount for this project is One Million Seven Hundred Ninety-Eight Thousand Four Hundred Thirty-One Dollars and Seventy-Eight Cents ($1,798,431.78) which includes a project contingency of $35,000.00. The project contingency is for project elements which have not been fully designed and permitted, and which may increase in quantity or cost during construction. The project contingency is for the Design-Builder's benefit and not for changed field conditions, unknown field conditions or added scope of work. The design and permitting phase will be completed within one hundred fifty (150) calendar days, and the construction will be completed within one hundred eighty days (180) from notice-to-proceed. The total project duration should be 330 calendar days.

This lump sum proposal is inclusive of only those services noted on the attached fee summary and which are anticipated at this time. No services or work other than those noted in the proposals are included. In addition, any unknown condition(s) which may surface during construction or any other increase in scope of services may result in a request for additional fees. No work will proceed however, without first obtaining approval from the City for any additional services.

We are again very appreciative of the opportunity to provide you with our design-build services. Should you have any questions or need any further information, please do not hesitate to contact us.

Regards,
J.B. Coxwell Contracting, Inc.

Jayson Smith

Jayson Smith,
Design Build Manager

EXHIBIT EE-1

Hartley Road Ditch Drainage Improvements - Rev 1			Contractor: J.B. Coxwell Contracting, I	
			Submitted By: Jayson Smith	
Bid Date: 5/8/2019			Phone 904-786-1120	
Description	**Unit**	**Qty.**	**Unit Price**	**Total Price**
General Conditions				
General Conditions	LS	1	$127,000.00	$ 127,000.00
General Conditions				$ 127,000.00
Ditch Grading				
Maintenance of Traffic - Ditches	LS	1	$15,000.00	$ 15,000.00
Erosion Control - Ditches	LS	1	$7,370.00	$ 7,370.00
Clear Ditches As Necessary To Cut Cut Swale	LF	4180	$15.00	$ 62,700.00
Ditch & Swale Excavation - 3' Avg Bottom Width - Vertical Walls	CY	1500	$130.00	$ 195,000.00
Rap)	SY	2150	$91.00	$ 195,650.00
Pegged Sod	SY	6650	$6.00	$ 39,900.00
Allowance For Fence Restoration	LF	500	$26.25	$ 13,125.00
Allowance For MES Repair	LS	1	$11,500.00	$ 11,500.00
Ditch Grading				$ 540,245.00
Storm Crossing @ Hartley Rd				
Maintenance of Traffic - Crossing (Assumes Full Closure/ Detour	LS	1	$5,990.00	$ 5,990.00
Erosion Control - Crossing	LS	1	$1,365.00	$ 1,365.00
Remove Existing Pipe & Headwalls	LS	1	$6,926.00	$ 6,926.00
48" x 76" ERCP	LF	200	$429.00	$ 85,800.00
48" x 76" Dbl End Wall	EA	2	$15,606.00	$ 31,212.00
Rip Rap For Crossing	TN	392	$126.00	$ 49,392.00
Sod At Crossing	SY	400	$4.60	$ 1,840.00
Pavement Repair - Hartley Road	SY	86	$87.00	$ 7,482.00
Mill & Resurface Hartley Road	SY	530	$31.00	$ 16,430.00
Storm Crossing @ Hartley Rd				$ 206,437.00
Pond Construction				
Erosion Control - Pond	LS	1	$9,670.00	$ 9,670.00
Clearing Pond	AC	3.5	$11,497.00	$ 40,239.50
Pond Excavation	CY	45224	$11.75	$ 531,382.00
Grassing For Pond	SY	7615	$2.60	$ 19,799.00
Control Structure	EA	1	$5,610.00	$ 5,610.00
30" RCP	LF	120	$100.00	$ 12,000.00
30" MES	EA	3	$2,283.00	$ 6,849.00
Pond Fence	LF	1850	$18.40	$ 34,040.00
Concrete Driveway 6" Thk	SY	72	$53.00	$ 3,816.00
Pond Construction				$ 663,405.50

EXHIBIT EE-1

Hartley Road Ditch Drainage Improvements - Rev 1		Contractor: J.B. Coxwell Contracting,		
		Submitted By: Jayson Smith		
Bid Date: 5/8/2019		Phone 904-786-1120		
Description	**Unit**	**Qty.**	**Unit Price**	**Total Price**
Additional Required Design Build Items				
Construction Contingency	LS	1	$35,000.00	$ 35,000.00
Design, Engineering, Permitting Fees	LS	1	$84,308.34	$ 84,308.34
100% P&P Bond	LS	1	1.0%	$ 16,563.96
JBCCI Design Build Fee	LS	1	7.5%	$ 125,471.98
Design Build Items				$ 261,344.28
Grand Total				**$ 1,798,431.78**

Clarifications/ Exclusions;

Modified scope to minimize work to ditch flow restoration only, minimal clearing to flow line of ditch only

Temporary construction easements will be required, these should be provided by COJ

Average of 1-2 feet of sediment removal across length of ditch, average width of channel creation to 3 feet across, no work on slopes of ditch

Clearing and grubbing limited to bottom of ditch only, existing banks will not be disturbed by construction when possible

Access to ditch will require temporary construction easements along multiple properties throughout the work

JBCCI did not include the construction material testing that may be required for this project, this would be by CO.

EXHIBIT EE-1

gai consultants
transforming ideas into reality

May 8, 2019

Jayson Smith
Design-Build Manager
J.B. Coxwell Contracting, Inc.
6741 Lloyd Road West
Jacksonville, Florida 32254

Re: Fee Proposal for 100% Design, Permitting, and Post-Design Services for Hartley Road/Deep Bottom Creek Drainage Improvements Design-Build Construction Delivery for the City of Jacksonville RFQ CDB-0006-16/City Contract No. 6533-54

Dear Mr. Smith:

In accordance with the terms and conditions of our master agreement for professional services dated 06-07-16, **GAI Consultants, Inc., (GAI)**, is providing you with this proposal for the above referenced project.

Project Understanding and Scope of Services

GAI is in receipt of an undated Design Criteria Package (DCP) and preliminary design plans and calculations for the subject project. The project generally consists of the regrading of multiple existing ditches, installation of new storm pipes crossing Hartley Road, and the construction of a new stormwater pond. Under this proposal, GAI will be providing for the 100% design, permitting and post-design services for the construction of these improvements as preliminarily designed by the City of Jacksonville.

All design scope, fees, and assumptions are based on the information provided by the City of Jacksonville in the form of a DCP, which is attached hereto. Based on the above, GAI's scope of services include the following:

1. Provide the required environmental services.
2. Provide the required geotechnical services.
3. Provide the required utility locate services to confirm there are no utilities within the project limits.
4. Develop 100% design documents for this project so that they are suitable for construction by J.B. Coxwell Contracting, Inc. and for any necessary permitting.
5. Attend design review meetings with you and/or the City.
6. Obtain the necessary COJ, St. Johns River Water Management District and Army Corps of Engineers permits.
7. Provide for the necessary post-design services in order to certify the project as may be applicable. It is assumed that the City will provide GAI with electronic (CAD) versions of all design documents, ICPR models, surveys, etc. completed to date.

Finally, GAI's scope of work will entail managing the project during the 100% design phase, attending project design review meetings, providing quality assurance and quality control during and at the completion of the 100% design phase, documenting meeting results and directives as issued by the City, schedule evaluations, and budgetary controls.

Items not included in this scope of services:

1. Utility relocation design.
2. Landscape/hardscape/irrigation design.
3. Wetland Mitigation Costs.
4. Tree Mitigation Calculations and Permitting.
5. Construction Inspection
6. Any other design services not specifically itemized herein.

gai consultants
transforming ideas into reality

If you have any questions, please do not hesitate to give us a call.

Regards,

GAI CONSULTANTS, INC.

Kevin R. Leadbetter, P.E.
Vice President

Attachments: GAI Fee Summary
Undated Design Criteria Package
ESI Proposal dated April 1, 2019
MAE Proposal dated May 1, 2019

Exhibit A - Page 1 of 1
CONTRACT FEE SUMMARY FOR
HARTLEY ROAD/DEEP BOTTOM CREEK DRAINAGE IMPROVEMENTS 100% Design Services

PART I - GENERAL	
1. Project - D/B Construction Delivery for COJ Hartley Road Deep Bottom Creek Drainage Improvements	**2. Project Number** CDB-0006-16
3. Name of Consultant GAI Consultants, Inc.	**4. Date of Proposal** 5/8/2019

PART II - LABOR RELATED COSTS

5. DIRECT LABOR	Hourly Rate	Estimated Hours	Estimated Cost	TOTAL
Principal	$ 104.30	2	$ 208.60	
Project Manager (Responsible Prof.)	$ 84.59	20	$ 1,691.80	
Senior Project Engineer	$ 64.49	35	$ 2,257.15	
Project Engineer	$ 49.14	82	$ 4,029.48	
Engineer Intern	$ 34.38	60	$ 2,062.80	
Senior Designer	$ 37.95	30	$ 1,138.50	
Designer/Sr. CADD Technician	$ 28.43	18	$ 511.74	
CADD Technician	$ 25.14	15	$ 377.10	
Clerical	$ 19.91	4	$ 79.64	
Survey Manager (PSM)	$ 58.62	8	$ 468.96	
Three Man Survey Crew	$ 79.04	40	$ 3,161.60	
			TOTAL DIRECT LABOR	**$ 15,987.37**
6. OVERHEAD (Combined Fringe Benefits & Administrative) Overhead Rate 173.58%				$ 27,750.88
7. SUBTOTAL: Labor + Overhead (Items 5 & 6)				**$ 43,738.25**
8. PROFIT: Labor Related Costs (Item 7)			x 10%	$ 4,373.82
			SUB-TOTAL SALARY RELATED COSTS	**$ 48,112.07**

PART III - OTHER COSTS

9. MISCELLANEOUS DIRECT COSTS (Lump Sum)	
Misc. Direct Expenses (Lump Sum)	$ 1,200.00
SJRWMD Permit	$ 3,000.00
MISCELLANEOUS DIRECT COSTS SUB-TOTAL	**$ 4,200.00**
10. SUBCONTRACTS (Lump Sum)	
Environmental Services Inc.	$ 18,600.00
FR Aleman	$ 6,500.00
MAE	$ 6,896.27
SUB-CONTRACT SUB-TOTAL	**$ 31,996.27**

PART IV - SUMMARY

TOTAL LUMP SUM AMOUNT (Items 5, 6, 8, 9 and 10)	**$ 84,308.34**

DESIGN CRITERIA PACKAGE
For
HARTLEY ROAD/DEEP BOTTOM CREEK DRAINAGE IMPROVEMENTS

A. General

The Design-Build firm shall be responsible for the final design. Preliminary Plans and calculations have been completed by the City's Engineering Division. Before construction activities can begin, 100% Drawings must be reviewed and approved by the City's Engineering Division. Any construction initiated by the Design-Build firm prior to receiving approval from the City shall be at the sole risk of the Design-Build firm.

B. Scope of Work

The work shall consist of the regrading of multiple existing ditches, installation of new storm pipes crossing Hartley Road, and the construction of a new stormwater pond. A project similar to this was designed and permitted for the City in 2009, but the previous SJRWMD permit has since expired. This project will be similar, but not exactly the same as the previously designed project. Attached to this document you will find: A Survey of the Indian Walk neighborhood, A Survey of Hartley Road and the Construction Plans from the previous SJRWMD permit for this project, ICPR Models for the Pre and Post Construction conditions, and a Detail of the Proposed Control Structure. The Indian Walk Survey also includes contours for the proposed pond. The Control Structure Detail includes general information such as weir dimensions but some details will need to be or designed by the Design-Build firm. These include but are not limited to: The number and location of access manholes, skimmer specifications, concrete thickness of the box (especially the bottom of the structure to prevent floating), and incoming/outgoing pipe sizes. This preliminary work has been done by the City and is to be used by the Design-Build firm as a guide to the design of the project. This should reduce the design effort needed for this project.

C. Proposed Ditch Impacts

As noted above, this project includes the regrading of existing ditches. The main ditch section being regraded is South of Hartley Road. This ditch currently has an elevation around 19' just South of Hartley Road. Due to the proposed pipes crossing Hartley Road, this will need to be lowered to 16'. This ditch will have to be regraded (Proposed to be flat) downstream of Hartley Road approximately 2,000 LF to tie in to an existing point that is at elevation 16'. There are also a number of existing ditches within the Indian Walk neighborhood that will all need to be regraded to promote better drainage. See the attached ICPR models for proposed elevations at each end of the existing ditches.

D. Legal Description of the Site

The proposed project is located within City-owned right-of-way and on other City-owned parcels near Hartley Road. See Appendix A showing the RE numbers of the City-owned parcels.

E. Location of Proposed Improvements on Site

The proposed improvements are located within City-owned ditches in the Indian Walk neighborhood (North of Hartley Road) and on City-owned land South of Hartley Road.

F. Budget

The available budget for this project is $545,000.

G. Permits

The Design-Build firm shall be responsible for obtaining permits from the Army Corps of Engineers, SJRWMD, and the City of Jacksonville. A significant portion of the design required for these permits has been completed by the City and provided to the Design-Build firm.

H. Maintenance of Traffic

The new pipes crossing Hartley Road will require the majority of the MOT for the project. Hartley Road cannot be completely closed at any time during the project. Temporary closures of one lane at a time are permitted if necessary. No lanes shall be closed overnight.

I. Schedule

Along with the Guaranteed Maximum Price, the Design-Build firm is to submit a proposed schedule for the design/permitting and construction of the project.

J. Working Hours

Allowable working hours shall be Monday through Friday from 7 a.m. until 5 p.m.

K. Fueling of Equipment

No fueling of equipment will be allowed in City of Jacksonville right-of-way or within any easements. Fueling will have to take place off-site.

L. Staging Area

The Design-Build firm shall be responsible for the staging area. All disturbed areas of the rights-of-way and easements shall be restored to the pre-construction condition.

M. Utility Locations

The locations of existing utilities must be determined during the design phase of the project. The City does not believe there are existing utilities in the work areas. This is to be confirmed by the Design-Build firm. The Design-Build firm will be responsible for locating any existing utilities, avoiding possible conflicts, performing any required utility relocations, repairing any damaged utilities, or any other costs associated with existing utilities.

END OF THE DESIGN CRITERIA PACKAGE

Appendix A

Location Map with Pond RE Numbers

EXHIBIT EE-1

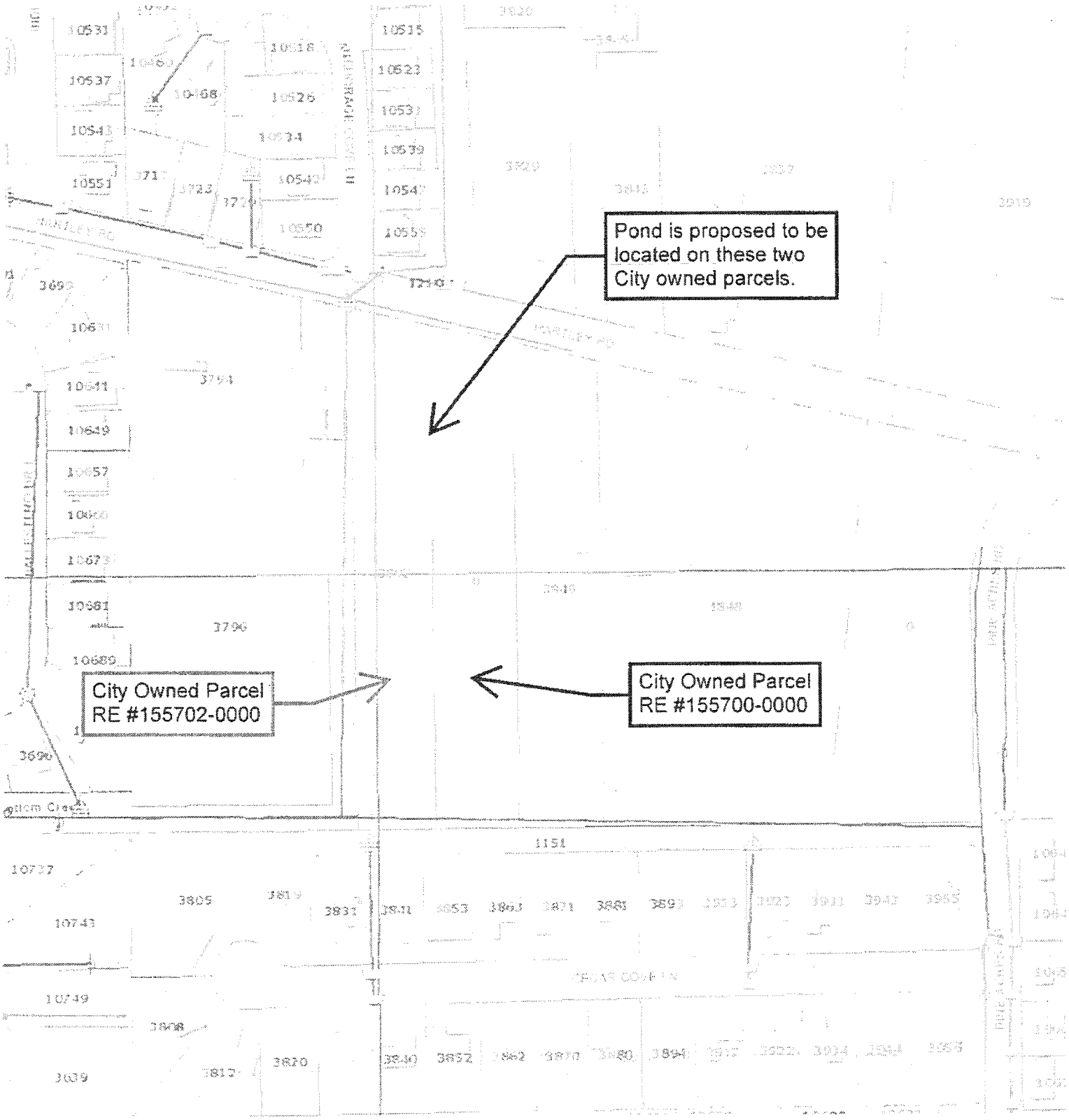
Pond is proposed to be located on these two City owned parcels.
City Owned Parcel RE #155702-0000
City Owned Parcel RE #155700-0000

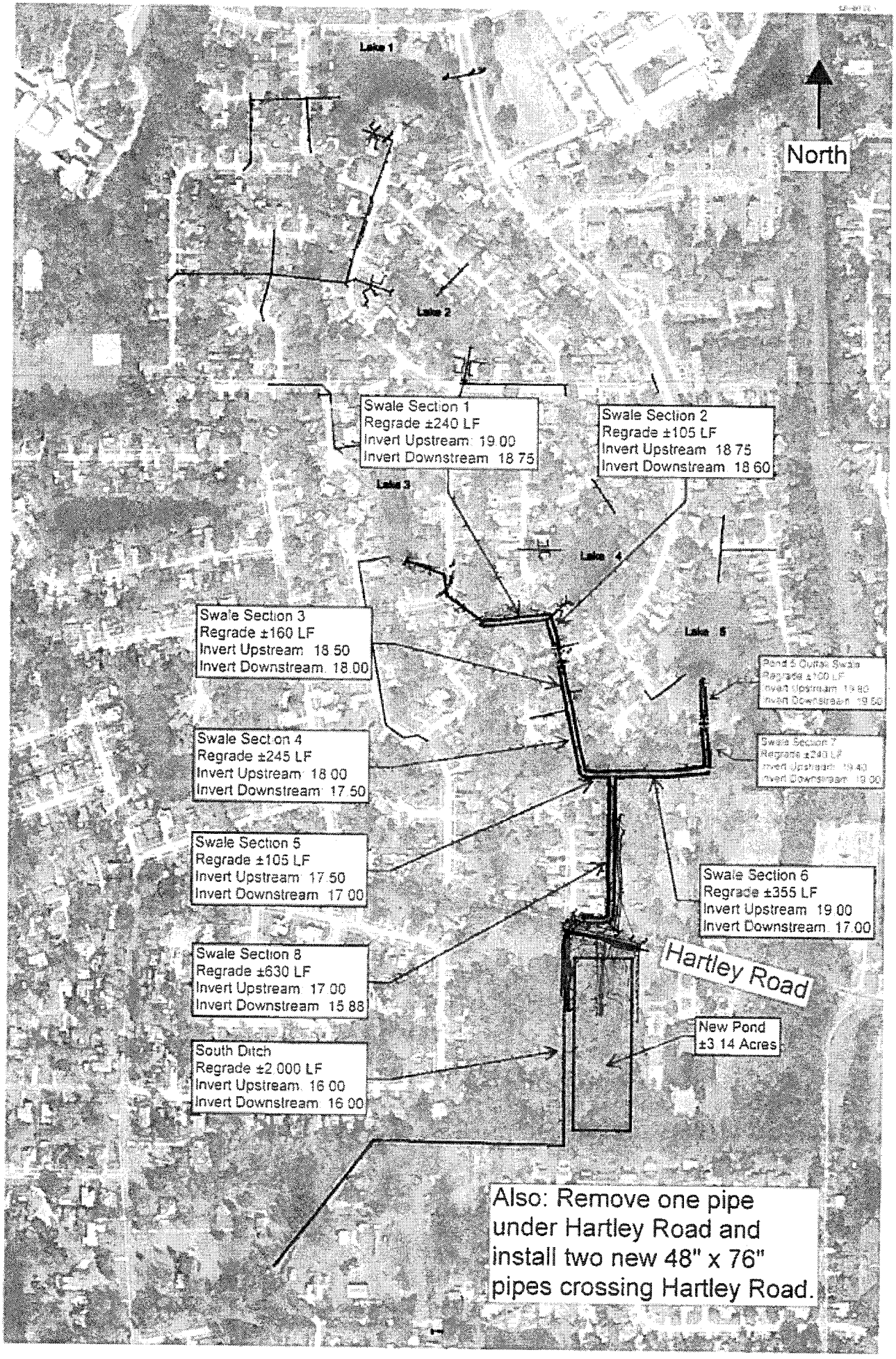
Lake 1
Lake 2
Lake 3
Lake 4
Lake 5
North
Swale Section 1
Regrade ±240 LF
Invert Upstream 19 00
Invert Downstream 18 75
Swale Section 2
Regrade ±105 LF
Invert Upstream 18 75
Invert Downstream 18 60
Swale Section 3
Regrade ±160 LF
Invert Upstream 18 50
Invert Downstream 18.00
Swale Section 4
Regrade ±245 LF
Invert Upstream 18 00
Invert Downstream 17 50
Swale Section 5
Regrade ±105 LF
Invert Upstream 17 50
Invert Downstream 17 00
Swale Section 6
Regrade ±355 LF
Invert Upstream 19 00
Invert Downstream 17.00
Swale Section 8
Regrade ±630 LF
Invert Upstream 17 00
Invert Downstream 15 88
South Ditch
Regrade ±2 000 LF
Invert Upstream 16 00
Invert Downstream 16 00
Hartley Road
New Pond
±3 14 Acres
Also: Remove one pipe under Hartley Road and install two new 48" x 76" pipes crossing Hartley Road.

Appendix F

Proposed Control Structure Detail

EXHIBIT EE-1

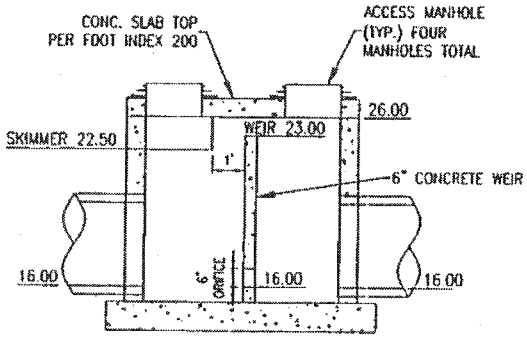

SECTION 1
NTS

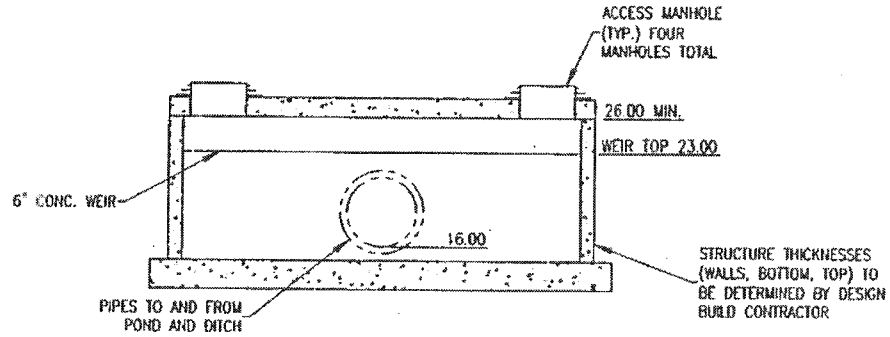

SECTION 2
NTS

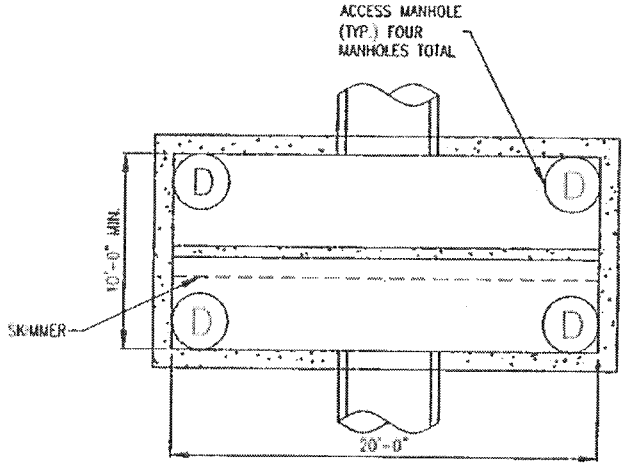

PLAN VIEW
NTS

EXHIBIT EE-1

ENVIRONMENTAL SERVICES, INC.
7220 Financial Way, Suite 100
Jacksonville, FL 32256

Phone 904-470-2200 * Fax 904-470-2112

www.environmentalservicesinc.com

1 April 2019

Mr. Bob Baxter
GAI Consultants, Inc.
1301 Riverplace Boulevard, Suite 900
Jacksonville, Florida 32207

RE: Hartley Road Drainage Improvements (EJ19159.00)
Duval County, Florida

Dear Bob:

Thank you for contacting Environmental Services, Inc. (ESI). Pursuant to our recent conversation, ESI is pleased to enclose the attached proposal. Please note under our Terms section at the end of the proposal that, as the client, you assure ESI that we have permission to work on the property being evaluated and that you will advise us regarding the proper procedures for accessing the property.

If the attached meets your requirements, please approve by signing and returning the enclosed document to us by mail to the address above, by fax (904-470-2112) or via email (ghowalt@esinc.cc). We are prepared to proceed upon receipt of the signed contract. We look forward to working with you.

Please contact me should you have any questions. Thank you for selecting ESI to assist with your environmental consulting needs.

Sincerely yours,

ENVIRONMENTAL SERVICES, INC.

Gary K. Howalt

Gary K. Howalt
Principal

GKH/smc/EJ19159 proposal doc
S pf040119f

ENVIRONMENTAL SERVICES, INC.

PROPOSAL FOR SERVICES
ESI PROJECT NO. EJ19159.00

The following Contract for Services is an agreement between Environmental Services, Inc. (ESI) and GAI Consultants, Inc. (Client) with the terms specified herein. Client agrees that the company/individual signing this agreement has the ability to compensate ESI for the work described herein whether or not the proposed project materializes. ESI agrees to perform the following tasks for the associated fee.

Project Name: **Hartley Road Drainage Improvements**
Project Location: **Duval County, Florida**

SCOPE OF SERVICES		FEE
Task 1.	**Wetland Delineation**	$2,000.00
	ESI will field delineate the limits of jurisdictional wetlands pursuant to the current methodologies of the U.S. Army Corps of Engineers [(ACOE) 2010 Regional Supplement to the Corps of Engineers Wetland Delineation Manual: Atlantic and Gulf Coastal Plain Region (Version 2.0)], Florida Department of Environmental Protection (FDEP) and St. Johns River Water Management District [(SJRWMD) Florida Unified Wetland Delineation Methodology, Chapter 62-340, F.A.C.]. We will provide you and your chosen land surveyor with a flagging key map showing the approximate location of the jurisdictional line.	
	This task does not include the formal mapping of the wetland boundary. A licensed land surveyor must perform this mapping.	
Task 2.	**SJRWMD Pre-application Meeting**	$800.00
	ESI will participate in one pre-application meeting at the SJRWMD office to discuss preliminary project design and potential wetland impacts.	
Task 3.	**ACOE Pre-application Meeting**	$800.00
	ESI will participate in one pre-application meeting at the ACOE office to discuss preliminary project design and potential wetland impacts.	
Task 4.	**SJRWMD Individual Environmental Resource Permit Application**	$4,000.00
	ESI will assist you in preparation and submittal of an Individual Environmental Resource Permit (ERP) application. ESI will	

prepare responses to environmental portions of Section E of the ERP application.

Task 5. ACOE Individual Permit Application $4,000.00

ESI will prepare and submit an ACOE Individual Permit Application, including a proposed plan of development, mitigation plan, Public Notice information and draft, and Section 404(b) environmental documentation.

This permit involves public notice, coordination with U.S. Environmental Protection Agency (EPA), U.S. Fish and Wildlife Service (FWS) and National Marine Fisheries (NMF). These permits are usually issued within 6 to 9 months.

Task 6. Requests for Additional Information (RAI) $3,000.00 estimate (not to exceed)

ESI will prepare responses to one RAI from each permitting agency.

In most cases, the representatives from ACOE and SJRWMD ask for additional information related to the project which is not typically included in the permit application. The content and detail of these requests are difficult to predict at this time as this is dependent upon the level of scrutiny that the agency personnel and others offering comments feel is appropriate for the project. Typically, SJRWMD issues one RAI with questions related to both environmental and stormwater engineering issues. ACOE RAIs typically consist of providing technical responses to comments from U.S. Fish and Wildlife Service (FWS), National Marine Fisheries Service (NMFS), U.S. Environmental Protection Agency (EPA) or others.

Task 7. Project Coordination and Meetings $4,000.00 estimate (not to exceed)

ESI will coordinate with the project team, participate in project progress meetings and meetings with regulatory agency staff as requested.

Additional services not specifically addressed herein will be invoiced on a time and materials basis at standard ESI hourly rates. We will provide you with a written proposal for these tasks if, or when, they become necessary. We are prepared to proceed upon receipt of the signed contract.

ESI is committed to providing quality service to our clients. Every project is reviewed by a senior technical manager to ensure that the work has been performed in compliance with our goal of providing superior service and solutions to our clients.

ENVIRONMENTAL SERVICES, INC.

Project Name: **Hartley Road Drainage Improvements (EJ19159.00)**
Project Location: **Duval County, Florida**

Task 1:	Wetland Delineation	Fee:	$2,000.00
Task 2:	SJRWMD Pre-application Meeting	Fee:	$800.00
Task 3:	ACOE Pre-application Meeting	Fee:	$800.00
Task 4:	SJRWMD Individual Environmental Resource Permit Application	Fee:	$4,000.00
Task 5:	ACOE Individual Permit Application	Fee:	$4,000.00
Task 6:	Requests for Additional Information	Fee:	$3,000.00 est. NTE
Task 7:	Project Coordination and Meetings	Fee:	$4,000.00 est. NTE

TERMS:

- ESI will complete the work described above in a timely manner unless delayed by Client's request, lack of information, or intervening factors beyond our control.
- Client assures ESI that it has permission to work on the subject property and will advise ESI of proper procedures for accessing subject property.
- **ESI will maintain a minimum $1,000,000 errors and omissions (professional liability) insurance; $1,000,000 per occurrence and $2,000,000 aggregate general liability insurance for the duration of the project. If any additional insurance requirements are necessary, please return the specifications with the signed proposal. They will become a part of this contract as agreed by both parties.**
- Outside services and expenses such as subcontractors and special purchases will be invoiced with a handling fee of 15 percent.
- Client will provide ESI with any special billing formats or considerations with the signed contract.
- Billing is done monthly. **Payment is due immediately upon receipt of the invoice**; after 30 days the Client agrees to pay 1.5 percent late fee per month or portion thereof on unpaid balances. Unpaid balances after 60 days from the date of the invoice may result in work stoppage until overdue accounts are resolved.
- Failure to pay within 60 days from the date of invoice will be considered by ESI to be a breach of contract, and ESI may cease work and withhold all work product immediately without penalty from the Client.
- Client agrees that this contract is an agreement between Client and ESI. Payment is due from Client at the time services are performed. Payment shall not be contingent upon regulatory action or upon resolution of any legal matter that ESI is not a party to. If ESI is being contracted to complete work which Client will use in a legal dispute, Client agrees to pay ESI in a timely manner without regard to the current standing of that legal dispute. ESI fees may not be incorporated into real estate closings without prior written consent from ESI.
- This agreement shall be governed by the laws of the State of Florida, United States. Any lawsuit, proceeding or action arising out of or relating to this agreement must be brought in any court of competent jurisdiction located within Duval County, Jacksonville, Florida. Each of the parties irrevocably submits and consents to the exclusive jurisdiction of such court in any such lawsuit, proceeding or action, and waives any defense or objection it may now or hereafter have to personal jurisdiction, venue, or inconvenient forum.
- ESI rates change on March 1 of each year.
- **This proposal is valid for a period of 60 days following the date of issuance.**

TERMS ACCEPTED:		**ENVIRONMENTAL SERVICES, INC.**	
SIGNATURE:	_____	SIGNATURE:	Gary K Howalt
NAME:	_____	NAME:	Gary K. Howalt
FIRM:	_____	FIRM:	Environmental Services, Inc.
TITLE:	_____	TITLE:	Principal
DATE:	_____	DATE:	1 April 2019

BILLING ADDRESS AND CONTACT IF DIFFERENT FROM ABOVE:

_____

_____

GKH/smc/EJ19159 proposal doc
S pf040119f

EXHIBIT EE-1

ENVIRONMENTAL SERVICES, INC

ENVIRONMENTAL SERVICES, INC.
SCHEDULE OF LABOR AND EXPENSE RATES 2018

POSITION	RATE
Technical	
Assistant Scientist	$43.00/Hour
Environmental Technician	$53.00/Hour
Project Scientist	$63.00/Hour
Senior Scientist	$78.00/Hour
Senior Geologist	$123.00/Hour
Project Archaeologist	$48.00/Hour
Senior Archaeologist	$63.00/Hour
Historic Resource Specialist	$83.00/Hour
Historian	$63.00/Hour
Preservation Planner	$68.00/Hour
Architectural Conservator	$68.00/Hour
Sustainability Specialist	$103.00/Hour
Project Forester	$93.00/Hour
Senior Forester	$108.00/Hour
Project Manager	$103.00/Hour
Senior Manager	$113.00/Hour
Forest Biometrician	$118.00/Hour
SR Forest Biometrician	$148.00/Hour
VP/Technical Director	$148.00/Hour
SR VP/Technical Director	$160.00/Hour
SR VP II/Technical Director	$180.00/Hour
Principal	$200.00/Hour
Administrative	
Receptionist	$38.00/Hour
Administrative Assistant	$53.00/Hour
Exec. Admin Assistant	$73.00/Hour
Graphics	
GIS/CAD Technician	$63.00/Hour
GIS/CAD Analyst	$83.00/Hour
GIS/CAD Manager	$108.00/Hour
GIS/CAD Senior Manager	$113.00/Hour

EXPENSE	CHARGE
Additional Services	
GIS/CAD Usage	$30.00/Hour
Global Positioning System	$50.00/Day
ATV Usage	$50.00/Day
Boat Usage	$100.00/Day
Local Courier Service	$13.00/Delivery
Outside Graphics	Cost + 15%
All Subcontracted Services	Cost + 15%
Travel	
Vehicle Mileage Rate	$0.58/Mile
Travel Expenses	Cost
Copies	
Photocopy Per Page	$0.15
Color Copy Per Page	$1.50 8 ½ x 11
	$2.50 8 ½ x 14
	$3.00 11 x 17
Full Size Copy Per Page	$2.00 24 x 36
	or 36 x 48 b/w
	$20.00 24 x 36
	or 36 x 48 color
Blueprints or Xerox Per Page	$2.50
Aerial Photography	$50 0 - 15 acres
	$100 16 - 50 acres
	$200 51 - 100 acres
	$300 101 - 999 acres
	$500 1000+ acres

ENVIRONMENTAL SERVICES, INC.

EXHIBIT EE-1

Environmental Services, Inc. (ESI) is an environmental consulting firm which has been in business for over 31 years. ESI provides services in a variety of disciplines, please keep us in mind for your future environmental, cultural and sustainable resource needs.

Cultural Resource Management

- Archaeology Surveys
- Historic Structure Surveys
- Underwater Archaeology
- Conservation Analysis
- Predictive Modeling
- Cemetery Studies/Conservation

Carbon & Greenhouse Gas (GHG)

- Greenhouse Gas (GHG) Emissions & Offsets
- ANSI Accreditation under
- ISO 14065
- GHG Offset Validations/ Verifications
- GHG Emissions Verifications
- Ecosystem Services
- Air, Water, Waste Footprint
- Analysis and Reduction
- Sustainable Action Planning
- Education/Outreach

Forestry

- Tree Ordinance & Compliance
- Arboricultural Assessments
- & Landscape Planning
- Land Management Planning
- Fire Management & Prescribed Burning
- Timber Assessment & Management

Ecology

- Due Diligence
- Permitting & Compliance
- Wetland Delineation/ Assessment
- Endangered & Threatened Species
- Mitigation
- Soil & Site Evaluation
- Aquatic & Marine Assessments
- Erosion & Sediment Control

Site Assessment & Remediation

- Phase I & II Environmental Site Assessments
- Soil & Groundwater
- Assessments
- Soil & Groundwater
- Remediation
- Petroleum/Hazardous Materials
- Storage Tank Management
- Brownfields Assessments
- Industrial Hygiene
- HUD Environmental
- Assessments
- USGBC LEED Green Building

OFFICE LOCATIONS

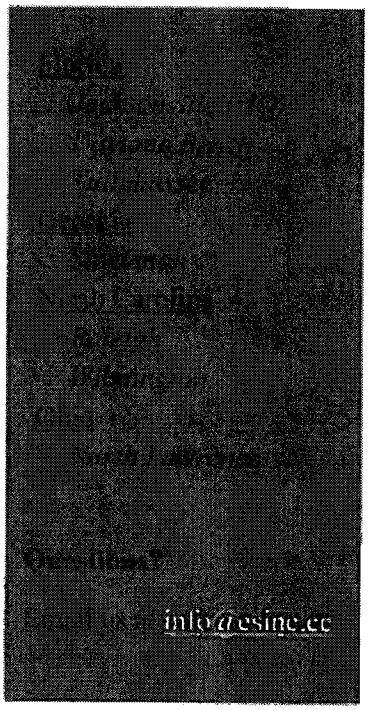

Follow ESI on Social Media

www.environmentalservicesinc.com

EXHIBIT EE-1

TEN YEARS 10

MAE

Meskel & Associates Engineering
Geotechnical • Environmental
Inspection • Testing

May 1, 2019

Mr. Robert E. Baxter, P.E.
GAI Consultants
1301 Riverplace Boulevard, Suite 900
Jacksonville, Florida 32207

Subject: Proposal for Geotechnical Exploration and Engineering Services
Deep Bottom Creek Drainage
Jacksonville, Florida
MAE Proposal No. 012219

Dear Mr. Baxter:

MESKEL & ASSOCIATES ENGINEERING, PLLC (MAE) is pleased to present this proposal to provide the geotechnical exploration and engineering services for the subject project. This proposal was requested by you via electronic correspondence on April 25, 2019.

We were provided with pdf documents titled "DESIGN CRITERIA PACKAGE Deep Bottom Creek 20190307", undated, prepared by GAI which detailed the location of the proposed project and the planned improvements. According to documents provided, the proposed construction will include a new 2-acre pond just south of Hartley Road east of Anchorage Cove Lane. The pond will be in a wooded area covering 2 parcels (RE #155702-0000 and RE #155700-0000), both owned by the City of Jacksonville.

The objective of the geotechnical exploration is to provide site and subsurface information to evaluate the subsurface conditions for the proposed construction. Based on the provided information, we propose the following scope of services:

Test Location	Test No. & Type	Test Depth (feet)
Pond (2-Acres)	4 Standard Penetration Test (SPT) Borings (Continuous Sampling)	20
	2 Permeability Tests [1]	0 to 2

1. The type of permeability tests will depend on if the pond is a dry or wet pond. We have budgeted to perform either field permeability tests (vertical field permeability tests to be performed at the pond bottom elevation and horizontal field permeability tests at the control elevation for a wet pond) or double-ring infiltrometer tests (DRI) for a dry pond.

The site appears to be accessible with our ATV-mounted drilling equipment. The borings for the pond will require clearing. We will locate the borings using our hand-held GPS equipment. Therefore, it should be anticipated that the boring locations will be as near as possible to the anticipated improvements. In accordance with Florida law, we will attempt to locate existing underground utilities at the site by utilizing the Sunshine State One-Call (SSOC) system. Any private utilities not included in the SSOC system will need to be located by the Owner.

Once the SPT borings are completed, they will be backfilled with grout. The DRI tests or field permeability tests will be backfilled with native soil cuttings once the tests are complete. We will take all reasonable precautions to prevent damage to property.

The recovered soil samples will be described in the field by the field crew. The field logs and samples will be delivered to our laboratory, where the logs will be reviewed, and the samples will be classified, by a geotechnical engineer.

Laboratory classification and soil index property tests will be performed as necessary on selected soil samples to confirm the soil classification and provide engineering characteristics to estimate compressibility.

A geotechnical engineer, licensed in the State of Florida, will direct the geotechnical exploration and provide an engineering evaluation of the subsurface conditions encountered at the boring locations. The results of the exploration and engineering evaluation will be documented in a report that will include the following:

- Our understanding of the planned construction and general description of the project;
- A boring location plan detailing the location of each boring and type of equipment used;
- Field exploration procedures and soil sampling methods used;
- Graphical representation in profile view of our boring logs and stratification which will detail the number of borings performed, description and thickness of each soil layer, any fluid loss(es) during drilling, and SPT-N values at each sample interval;
- The laboratory test procedures performed including corrosion series and permeability/DRI tests, and the results obtained;
- Results of our DRI or field permeability tests for each swale and the pond;
- Soil suitability for use as borrow material; and
- Recommendations pertaining to construction.

Based on the scope of the services outlined above, we propose to complete our work for an estimated fee of **$6,896.27**. This fee includes submittal of an electronic copy of the report. Bound, paper copies can be provided if requested. We will contact you immediately if we encounter subsurface conditions that could require the borings to be advanced to deeper depths, and/or if additional engineering analysis/evaluation outside the scope of this proposal is necessary.

Once authorization is received, a utility locate request will be submitted. We will mobilize our equipment to the site within one week once the utilities have been located and marked, which is typically 48 hours after the request is made. We anticipate the field work will take 1 to 2 days to complete. Verbal results can be provided within 2 to 3 days after completion of the field work. Laboratory testing will take up to one week to complete depending on the amount of lab testing assigned. We plan to submit our engineering report within 2 weeks following completion of the field exploration and laboratory testing programs.

We appreciate this opportunity to provide this proposal for your project. If you have any questions concerning this proposal, or if we can serve you in any other way, please contact me.

Sincerely,
MESKEL & ASSOCIATES ENGINEERING, PLLC

Brett H. Harbison

Brett Harbison, P.E.
Director, Geotechnical Services

Distribution: Mr. Robert E. Baxter, P.E. / GAI Consultants One e-mail copy

EXHIBIT EE-1

MAE
Meskel & Associates Engineering
Geotechnical • Environmental
Inspection • Testing

CONTRACT FEE SUMMARY FORMAT FOR ENGINEERING DIVISION
CITY OF JACKSONVILLE, FLORIDA

PART I - GENERAL

1. Project Deep Bottom Creek Drainage	**2. Contract Number** P-07-17
3. Name of Sub Consultant Meskel & Associates Engineering, PLLC	**4. Date of Proposal** 5/1/2019

PART II - LABOR RELATED COSTS

5. Direct Labor	Hourly Rate	Estimated Hours	Estimated Cost	TOTAL
Principal	$48.00	1.0	$ 48.00	
Chief Engineer	$44.43	0.0	$ 0.00	
Senior Project Engineer	$40.87	1.0	$ 40.87	
Staff Engineer	$28.50	16.0	$ 456.00	
Laboratory Technician	$22.63	0.0	$ 0.00	
Field Technician	$22.00	0.0	$ 0.00	
CADD Technician	$20.00	4.0	$ 80.00	
Clerical	$17.00	2.0	$ 34.00	
		0.0	$ 0.00	
		0.0	$ 0.00	
TOTAL DIRECT LABOR	$27.45	24.0		$658.87
6. Overhead (Combined Fringe Benefit & Administrative)				
Overhead Rate		200% x Total Direct Labor		$1,317.74
7. SUBTOTAL: Labor + Overhead (Items 5 & 6)				$1,976.61
8. PROFIT: Labor Related Costs (Item 7)		10% x (Labor + Overhead)		$197.66

PART III - OTHER COSTS

9. Miscellaneous Direct Costs				
Field Exploration:				
Mobilization of Crew & Eq. - Out of Street Right-Of-Way, ea	1	$500.00	$00.00	
Soil Test Borings - On Land (ASTM D-1586) 0 to 30 feet, LF	80	$11.00	880.00	
Extra Split Spoons - On Land 0 to 50 feet, ea	12	$26.00	312.00	
Grouting Borings, per foot	80	$6.50	520.00	
Field Permeability Test, each	4	$275.00	1,100.00	
Double Ring Infiltrometer (DRI) Test, each	0	$425.00	0.00	
Difficult Moving, per hour	4	$165.00	660.00	
Lab Testing:				
Natural Moisture Content, ea.	6	$10.00	60.00	
Percent Passing No. 200 Sieve, ea	0	$35.00	0.00	
Full Grain Size Analysis, ea	6	$65.00	390.00	
Organic Content, ea	3	$40.00	120.00	
Corrosion Series, ea	1	$180.00	180.00	
MISCELLANEOUS DIRECT COSTS SUB-TOTAL				$4,722.00
10. SUBCONTRACTS (Lump Sum)				
			$	
			$	
SUB-CONTRACT SUB-TOTAL				$0.00
TOTAL LUMP SUM AMOUNT (Items 5, 6, 8, 9 and 10)				$6,896.27
11. REIMBURSABLE COSTS (Limiting Amount)				
SUB-TOTAL REIMBURSABLES				$0.00

PART IV - SUMMARY

TOTAL AMOUNT OF CONTRACT (Lump Sum Plus Reimbursables) (Items 5, 6, 8, 9, 10 and 11)	**$6,896.27**

Florida Department of Transportation

RON DESANTIS
GOVERNOR

605 Suwannee Street
Tallahassee, FL 32399-0450

KEVIN J. THIBAULT, P.E.
SECRETARY

July 22, 2019

Anoinette Meskel, President
MESKEL & ASSOCIATES ENGINEERING, PLLC
8936 Western Way, Suite 12
Jacksonville, Florida 32256

Dear Ms. Meskel:

The Florida Department of Transportation has reviewed your application for prequalification package and determined that the data submitted is adequate to technically prequalify your firm for the following types of work:

Group 9 - Soil Exploration, Material Testing and Foundations

- 9.1 - Soil Exploration
- 9.2 - Geotechnical Classification Laboratory Testing
- 9.3 - Highway Materials Testing
- 9.4.1 - Standard Foundation Studies

Group 10 - Construction Engineering Inspection

- 10.3 - Construction Materials Inspection

Your firm is now technically prequalified with the Department for Professional Services in the above referenced work types. The overhead audit has been accepted, and your firm may pursue projects in the referenced work types with fees of any dollar amount. This status shall be valid until June 30, 2020 for contracting purposes.

Approved Rates

Home/ Branch Overhead	Field Overhead	Facilities Capital Cost of Money	Premium Overtime	Reimburse Actual Expenses	Home Direct Expense	Field Direct Expense	Published Fee Schedule
246.83%	138.60%	0.398%	Reimbursed	No	1.40%	0.00%*	Yes

*Rent and utilities excluded from field office rate. These costs will be directly reimbursed on contracts that require the consultant to provide field office.

Per Title 23, U.S. Code 112, there are restrictions on sharing indirect cost rates. Refer to Code for additional information.

Should you have any questions, please feel free to contact me by email at carliayn.kell@dot.state.fl.us or by phone at 850-414-4597.

Sincerely,

Carliayn Kell

Carliayn Kell
Professional Services
Qualification Administrator

EBO FORM 1
SCHEDULE OF SUBCONTRACTOR/SUBCONSULTANT PARTICIPATION

Name of Proposer: **J.B. Coxwell Contracting, Inc.**

Project Title: **Design-Build Services for Hartley Road Drainage Improvements (Reduced Scope)**

Proposal Number: **6533-54 - Amendment** Total Base Proposal Amount (if applicable): **$1,798,431.78**

***Please list all JSEBs first**

Full Company Name	JSEB Category (African-American, Women, Asian, Native American, Non-MBE or Hispanic)	Type of Work to be Performed	Total Contract Value or Percentage
Meskell & Asociates	Woman	Geotechnical. Engineering	0.5%
H. Trent Underground Sprinkler	African-American	Grassing	1.6%
Donna Hamilton, Inc.	Woman	Precast Drainage Structures & Pipe	3.0%
D.J. Contracting, Inc.	Woman	Trucking/ Hauling	13.3%

Attach additional list of subcontractors/sub-consultants as needed

CONSULTANT/SUBCONTRACTOR/SUPPLIER TOTAL VALUES	
African-American Participation Total	1.6%
Hispanic-American Participation Total	
Native-American Participation Total	
Asian-American Participation Total	
Woman Participation Total	16.8%
Non-MBE Participation Total	81.6%

The undersigned will enter into a formal Agreement with the JSEB Suppliers/Consultants/Subcontractors identified herein for work listed in this schedule conditioned upon execution of a contract with the City of Jacksonville. Under penalties of perjury I declare that I have read the foregoing conditions and instructions and the facts are true to the best of my knowledge and beliefs.

Signature of Proposer: Jayson Smith Title: Design Build Manager Date: September 11, 2019

Print Name: Jayson Smith

SUBJECT: RFQ- FOR DESIGN- BUILD SERVICES OF HORIZONTAL/CIVIL ENGINEERING PROJECTS

BID # CDB-0006-16

OPEN DATE: 10/21/2015

COMPETITIVE SEALED PROPOSAL EVALUATION COMMITTEE

KIND AND BASIS OF CONTRACT:
CONSTRUCTION – DESIGN/BUILD

AGENCY: DEPARTMENT OF PUBLIC WORKS

BASIS OF AWARD: EVALUATION CRITERIA

NUMBER OF BIDS INVITED: 5 NUMBER RECEIVED: 5 OTHER: 1

SUMMARY OF BIDS AND RECOMMENDED ACTIONS:

The City had previously issued this RFP, and the evaluation committee has evaluated proposals. Subsequently, presentations were conducted and evaluated on January 28, 2016. Based upon the combination of proposal and presentation evaluations, scores and rankings are as follows (Listed in alphabetical order):

2) Archer-Western – 118.25
3) Callaway Contracting, Inc. - 100
1) J.B. Coxwell Contracting, Inc. - 121.5

Recommend approval of award to J.B. Coxwell Contracting, Inc., as receiving the highest score in accordance with the evaluation and ranking above. Period of Service will be five (5) years from effective date of contract with funding not-to-exceed $6,000,000.00 annually. To be executed by formal contract through Office of General Counsel.

Attachments: Recommendation Memo, Scoring Matrix, Previous Award

BUYER Marilyn Laidler
MARILYN LAIDLER

RESPECTFULLY SUBMITTED
GREGORY REASE, CHIEF
PROCUREMENT DIVISION

CONCURRENCE BY: Thomas N. Fallin, P.E., Acting Chief-Engineering & Construction Management Division

(ALL AWARD ACTIONS SUBJECT TO LAWFULLY APPROPRIATED FUNDS)
ACTION OF CSPEC COMMITTEE ON RECOMMENDATIONS ABOVE

MEMBERS APPROVING 5 MEMBERS DISAPPROVING _____ DATE: 2/4/16

OTHER _____

ACTION OF AWARDING AUTHORITY DATE 2/04/16

MR APPROVED ✓ DISAPPROVED: _____

Sam E. Mousa
Chief Administrative Officer
For: Mayor Lenny Curry
Under Authority of
Executive Order No. 2015-05

OTHER: _____

SIGNATURE OF AUTHENTICATION _____

SUBJECT: RFQ- FOR DESIGN- BUILD SERVICES OF HORIZONTAL/CIVIL ENGINEERING PROJECTS
BID # CDB-0006-16

OPEN DATE: 10/21/2015

COMPETITIVE SEALED PROPOSAL EVALUATION COMMITTEE

KIND AND BASIS OF CONTRACT:
CONSTRUCTION – DESIGN/BUILD

AGENCY: DEPARTMENT OF PUBLIC WORKS

BASIS OF AWARD: EVALUATION CRITERIA

NUMBER OF BIDS INVITED: 5 NUMBER RECEIVED: 5 OTHER: 1

SUMMARY OF BIDS AND RECOMMENDED ACTIONS:

The City had previously issued this RFP, and the evaluation committee has evaluated proposals. Based upon the proposal evaluation, the average scores and rankings are as follows (Listed in alphabetical order):

2) Archer-Western Contractors, LLC. – 91
1) J.B. Coxwell Contracting- 92
3) Callaway Contracting- 74

Pursuant to Section 2.6 – Award of Contract of the RFP, recommend approval to conduct formal interviews with each of the three-top ranked Firms.

Attachments: Recommendation Memo, Scoring Matrix, Bid Tabulation, Section 2.6, JSEB Letter

BUYER Marilyn Laidler
MARILYN LAIDLER

RESPECTFULLY SUBMITTED
GREGORY PEASE, CHIEF
PROCUREMENT DIVISION

CONCURRENCE BY: William J. Joyce, P.E., Chief-Engineering & Construction Management

(ALL AWARD ACTIONS SUBJECT TO LAWFULLY APPROPRIATED FUNDS)
ACTION OF CSPEC COMMITTEE ON RECOMMENDATIONS ABOVE

MEMBERS APPROVING 5 MEMBERS DISAPPROVING _____ DATE: 12-30-15

OTHER _____

ACTION OF AWARDING AUTHORITY

MR APPROVED ✓ DISAPPROVED: _____ DATE 1/01/16

OTHER: _____

Sam E. Mousa
Chief Administrative Officer
For: Mayor Lenny Curry
Under Authority of:
Executive Order No. 2015-05

SIGNATURE OF AUTHENTICATION

QWS3270X 9/23/2019 3:53 PM
FAML6350 V5.1 ** NW COJ FAMIS PRODUCTION ** 09/23/2019
LINK TO: ACCOUNT SUMMARY INQUIRY 3:53 PM

FISCAL MO/YEAR : 12 2019 CURRENCY CODE :
INDEX CODE : PWCP351SD541 CITY/JTA TRANSP PROJECTS PAY-AS-YOU-GO
SUBOBJECT : 06504 CONSTRUCTION W-I-P
PROJECT : PW0385 HARTLEY RD/ST. AUGUSTINE TO S.R. 13
PROJECT DETAIL : 01 HARTLEY RD/ST. AUGUSTINE TO S.R. 13
GRANT :
GRANT DETAIL :
USER CODE :

S	SEPT 2019	ANNUAL BALANCE	ALL YEARS BALANCE
ESTIMATED REVENUES	.00	.00	.00
REVENUES	.00	.00	.00
UNREALIZED REVENUES	.00	.00	.00
BUDGET	.00	.00	6,877,962.19
EXPENDITURES	.00	.00	.00
ENCUMBRANCES	-2,492,807.00	-2,492,807.00	4,385,155.19
PRE-ENCUMBRANCES	.00	.00	.00
REMAINING BALANCE	2,492,807.00	2,492,807.00	2,492,807.00

F1-HELP F2-SELECT F4-PRIOR F5-NEXT
F9-LINK F10-PRIOR-MO F11-NEXT-MO
G005 - PRIOR RECORD DISPLAYED