SUBJECT: **PMB-"RESTROOM ACCESSIBLITY AND PLUMBING UPGRADES ADA"-(REBID)**

BID# CP-0089-15 OPEN DATE: **2015-03-18**

GENERAL GOVERNMENT AWARDS COMMITTEE

KIND AND BASIS OF CONTRACT:
CONSTRUCTION PARTICIPATION

AGENCY: **PUBLIC WORKS**

BASIS OF AWARD: **TOTAL LUMP SUM BASE BID, TO THE LOWEST RESPONSIVE, RESPONSIBLE BIDDER**

NUMBER OF BIDS INVITED **5** NUMBER RECEIVED **2** OTHER **0**

SUMMARY OF BIDS AND RECOMMENDED ACTIONS:

Subject bid was awarded on 03/26/15 to Core Construction Company of Jacksonville, Inc., d/b/a Core Construction Co., (contract #8565-09) in the amount of $509,000.00; Change Order #1 was awarded on 04/28/16 in the amount of $52,622.57; Change Order #2 was awarded on 06/16/16 in the amount of $88,767.29.

Recommend approval of Change Order #3 to Core Construction Company of Jacksonville, Inc., d/b/a Core Construction Co., in the amount $40,741.70. Total revised maximum indebtedness not-to-exceed $691,131.56.

This award to be funded by account: PWCP32EPB519-069505-PW0755-01 to be executed by contract change order through Office of General Counsel.

Attachments: Recommendation Memo, Change Order, Previous Award(s)

BUYER: Marilyn Laidler
MARILYN LAIDLER

RESPECTFULLY SUBMITTED: _____
GREGORY PEASE, CHIEF
PROCUREMENT DIVISION

CONCURRENCE BY: **Tom Fallin, P.E., Chief, Engineering and Construction Management Division**

(ALL AWARD ACTIONS SUBJECT TO LAWFULLY APPROPRIATED FUNDS)
ACTION OF GGAC COMMITTEE ON RECOMMENDATIONS ABOVE

MEMBERS APPROVING _____ MEMBERS DISAPPROVING _____ DATE: _____

_____ _____ OTHER: _____

_____ _____

_____ _____

ACTION OF AWARDING AUTHORITY DATE: _____

APPROVED _____ DISAPPROVED _____

OTHER _____

SIGNATURE OF AUTHENTICATION _____

FORM GB-108, Revised 12/2007

DEPARTMENT OF PUBLIC WORKS

Jacksonville
Where Florida Begins.

December 20, 2016

TO: Gregory W. Pease
Chief of Procurement

THRU: John P. Pappas, P.E.
Director

FROM: Tom Fallin, P. E.,
Chief, Engineering and Construction Management Division

Thomas G. McKnight
Capital Improvement Construction Manager

SUBJECT: Police Memorial Building Restroom Accessibility and Plumbing Upgrades, ADA
BID# CP-0089-15
Contract 8565-09

The subject contract was awarded under BID# CP-0089-15 in the amount of $509,000.00 to CORE Construction Company, Contract 8565-09. Change order #1 was for $52,622.57. Change order #2 was for $88,767.29. Change order #3 is detailed on the attached spreadsheet in the amount of $40,741.70.

Accordingly, this is to recommend approval for change order 3 to contract 8565-09 to CORE Construction Company, in the amount of $40,741.70. The maximum indebtedness to the city will be $691,131.56.

Funding for the change order to be encumbered by contract is as follows:

ACCOUNT NO.	Fund	ENCUMBERED AMOUNT
See attached		$40,741.70
TOTALS:		$40,741.70

TF/lw

Attachments

N2

ATTACHMENT "A"
ACCOUNT NUMBERS
POLICE MEMORIAL BUILDING RESTROOM ACCESSIBILITY AND PLUMBING UPGRADES ADA

ACCOUNT NO.	PWCP363PB519-06505-PW0078-02	PWCP32BPB519-069505-PW0078-02	PWCP32EPB519-069505-PW0755-01	Contract Totals
CT NO.	CTPW15000030-01	CTPW15000031-01	CTPW15000032-01	
original contract	$310,000.00	$138,661.85	$60,338.15	$509,000.00
change order #1	$0.00	$0.00	$52,622.57	$52,622.57
change order #2	$0.00	$0.00	$88,767.29	$88,767.29
change order #3	$0.00	$0.00	$40,741.70	$40,741.70
Account Totals	$310,000.00	$138,661.85	$242,469.71	$691,131.56

NBR	MASTER ITEM DESCRIPTION	QUANTITY	UOM	UNIT COST	NET ADDITION	NET DELETION
	ADDITIONAL SCOPE					
1	Add full panel urinal partitions	1	LS	$4,704.83	$4,704.83	
	JUSTIFICATION: JSO requested that the standard urinal screens that were installed be removed and replace with full size partitions that are typically used for toilet stalls.					
	TOTAL ADDITIONAL SCOPE:				**$4,704.83**	
	UNFORESEEN CONDITIONS					
2	Add fire rated wall systems	1	LS	$15,359.27	$15,359.27	
	JUSTIFICATION: When the contract documents were made the drawing assumed that all the existing walls were fire rated because the building drawings on file showed all existing walls as rated wall. Once work began it was realized that all the existing walls are not fire rated. COJ asked the contractor to make the walls in the scope areas to be fire rated. This involved new fire rated wall systems, fire rated access panels, fire rated wall and floor penetrations, and fire rated duct wrap.					
3	Replace rusty metal studs	1	LS	$8,415.00	$8,415.00	
	JUSTIFICATION: The contract made reference to replacing some studs to patch back the opening made to access the plumbing chase. Once evaluated from inside the chase we could see that all the studs were bad and the entire wall of studs needed to be replaced. .					
4	Re-Route plumbing lines	1	LS	$1,450.60	$1,450.60	
	JUSTIFICATION: There was a concrete column in the wall that plumbing lines needed to be rerouted around and new walls built to cover the exposed pipe.					
5	Rebuild 3rd floor shower room walls and floor	1	LS	$10,812.00	$10,812.00	
	JUSTIFICATION: When removing the existing tile floor it was realized that there was multiple layers of tile and all would need to be removed. While removing the tile floor most of the mud bed was destroyed. The entire floor needed to be removed and rebuilt before tile could be installed. It was also noticed that the metal studs in the room where rusted out and the walls had wood backing in them that needed to be removed due to the fire rated compliance.					
	TOTAL UNFORESEEN CONDITIONS:				**$36,036.87**	
	SUBTOTAL CHANGE ORDER NO. 3				$40,741.70	
	NET TOTAL CHANGE ORDER NO. 3					$40,741.70

CORE
CONSTRUCTION
COMPANY

July 13, 2016

Mr. Steven Hatton
Contract Administration Section
City of Jacksonville
214 N. Hogan Street
Jacksonville, Florida 32202

Subject: Police Memorial Building; City Contract No. 8565-09
PCO #21 – East Phase 1 – Urinal Screens with Head rail/overhead bracing at Men's Rooms 136 & 2137.

Dear Mr. Hatton:

Pursuant to the request to provide full panel urinal screens in Men's Rooms 136 & 2137, with head rail/over head bracing; scope of work includes removal and patch of the installed (per plan); replacement of the same with panels similar to the stall partitions, installation of head rail/overhead bracing. Please review the following cost breakouts:

Self-perform:
Labor & equipment----------$ 128.80
Contractor's overhead & profit ----------$ 19.32
Subtotal: ----------$ 147.32

Subcontractor:
Labor & Materials: ----------$3,267.10
Contractor's overhead & profit (subcontractor)----------$ 326.71
Subtotal: ----------$3,593.81

Total Proposed Change Order #21----------$3,741.13

Qualifications/Exclusions:
Based on typical/normal working hours and days.
The requirement for this work will cause a delay in the current schedule. The material is not a stock item and must be ordered. This change order work will require twenty one (21) calendar days extension of the contract time if accepted by no later than within two (2) days of this notice; due to lead time of material.

Please let me know if you have questions.

Sincerely,
Greg Bowles
Greg Bowles
Core Construction Company, Inc.

8375 Baymeadows Way • Jacksonville, Florida 32256 • 904.399.1033 phone • 904.399.1074 fax

Holman, Inc.

P O Box 60332
Jacksonville, FL 32236

Quotation

Date: 6/24/2016
Quotation No. 13243

To: CORE CONSTRUCTION COMPANY, INC.
8375 BAYMEADOWS WAY
JACKSONVILLE, FL 32256

Project/Job: Police Memorial Bldg
Location: Jacksonville, FL
Estimator: SMC
Terms: Net 30
Addendum No:

WE PROPOSE TO: Furnish Only ☐ Install Only ☐ Furnish & Install [X] CBC1258919

Qty	Description	Cost	Model No.	Total
	Furnish Material as Listed Below:	2,632.80		2,632.80T
	(2) each 59"x55" Panel			
	(2) each 51"x55" Panel			
	(4) each 3" Post w/Shoe			
	(2) each Cont Double Ear Bracket			
	(2) each Cont Single Ear Bracket			
	(4) each Cont U Bracket			
	(2) each 8' Headrail w/End Caps			
	Demo Exiting and Install New Material as Listed Above	450.00		450.00

We Exclude Wall Backing, Wall Cut-outs, Wall Openings and Blocking.

Subtotal		**$3,082.80**
Sales Tax (7.0%)	$184.30	
Total		**$3,267.10**

QUOTATION SUBJECT TO ACCEPTANCE WITHIN 60 DAYS.
PHONE (904) 781-4531 * FAX (904) 781-2142 * E-MAIL info@holman-inc.com
NOTE: Quote is based on HOLMAN, INC's current Worker Compensation and General Liability Insurance Coverage. Additional Coverage, Waivers or Endorsements MUST BE Requested Before Work is Performed and Will Result in Additional Costs to the Requester. Holman, Inc. is a certified WMBE, DBE, and JSEB company. Subcontracts with a Value less than $2,000 will incur a $200.00 Processing Fee.

ACTIVITY & LOCATION
Police Memorial Building
PCO 21
Patch work as required for new urnial screens
East Phase 1 - Men's Rooms 136 & 2137

NAME & ADDRESS OF CONTRACTOR
Core Construction Company
8375 Baymeadows Way, Jacksonville, FL 32256

DATE: 6/29/2016

TOTAL AREA
Duration 21 days-minimum

ITEM NO.	DESCRIPTION	QUANTITIES NO. O	UNIT	LABOR COST UNIT COST	LABOR COST SUBTOTAL	MATERIALS COST UNIT COST	MATERIALS COST SUBTOTAL	SUB CONTRACT	TOTAL
9	**Epoxy Flooring**								
	Flooring-Skilled	2	hrs	$ 28.00	$ 56.00		$ -	$ -	$ 56.00
	Flooring-Semi Skilled	2	hrs	$ 22.40	$ 44.80		$ -	$ -	$ 44.80
	Flooring-materials(use of left overs - may not be perfect match-spot work only)	1	LS	$ -	$ -	$ -	$ -	$ -	$ -
	GYP ASSEMBLY - SUBTOTALS				**$ 100.80**		**$ -**	**$ -**	**$ 100.80**
9	**PAINTING**								
	Paint-walls-Skilled	1	hr	$ 28.00	$ 28.00		$ -	$ -	$ 28.00
	Paint-materials(use of left overs - may not be perfect match-spot work only)	1	LS	$ -	$ -	$ -	$ -	$ -	$ -
	PAINTING -SUBTOTALS				**$ 28.00**		**$ -**	**$ -**	**$ 28.00**
									$ -

TOTAL	**$ 128.80**

CORE
CONSTRUCTION
COMPANY

August 22, 2016

Mr. Steven Hatton
Contract Administration Section
City of Jacksonville
214 N. Hogan Street
Jacksonville, Florida 32202

Subject: Police Memorial Building; City Contract No. 8565-09
PCO #23-Additional Toilet Partition in Men's Room 3104

Dear Mr. Hatton,

Pursuant to the reply to RFI #53; the additional costs to provide and install a toilet partition at the location shown on the plans as an existing wall; please review the following cost breakouts:

Subcontractor Quote:
Holman - Labor, materials, & equipment----------$ 876.09
Contractor's overhead & profit ----------$ 87.61

Subtotal: ----------$ 963.70

Total Proposed Change Order #23----------$ 963.70

This change order work will require (21) calendar days extension of the contract time if accepted by no later than within seven (7) days of this notice.

Please let me know if you have questions.

Sincerely,
Greg Bowles
Greg Bowles
Core Construction Company, Inc.

8375 Baymeadows Way • Jacksonville, Florida 32256 • 904.399.1033 phone • 904.399.1074 fax

Holman, Inc.

P O Box 60332
Jacksonville, FL 32236

Quotation

Date: 8/10/2016
Quotation No. 13443

To: CORE CONSTRUCTION COMPANY, INC.
8375 BAYMEADOWS WAY
JACKSONVILLE, FL 32256

Project/Job: Police Memorial Bldg
Location: Jacksonville, FL
Estimator: SMC
Terms: Net 30
Addendum No:

WE PROPOSE TO: Furnish Only ☐ Install Only ☐ Furnish & Install [X] CBC1258919

Qty	Description	Cost	Model No.	Total
	PER RFI #53			
	Additional (1) each Plastic Laminate Panel wHardware for Men's Room 3104	762.70		762.70T
	Additional Install	60.00		60.00

PER RFI #53

We Exclude Wall Backing, Wall Cut-outs, Wall Openings and Blocking.

Subtotal		**$822.70**
Sales Tax (7.0%)	$53.39	
Total		**$876.09**

QUOTATION SUBJECT TO ACCEPTANCE WITHIN 60 DAYS.
PHONE (904) 781-4531 * FAX (904) 781-2142 * E-MAIL info@holman-inc.com
NOTE: Quote is based on HOLMAN, INC's current Worker Compensation and General Liability Insurance Coverage. Additional Coverage, Waivers or Endorsements MUST BE Requested Before Work is Performed and Will Result in Additional Costs to the Requester. Holman, Inc. is a certified WMBE, DBE, and JSEB company. Subcontracts with a Value less than $2,000 will incur a $200.00 Processing Fee.

CORE
CONSTRUCTION
COMPANY

April 20, 2015

Mr. Steven Hatton
Contract Administration Section
City of Jacksonville
214 N. Hogan Street
Jacksonville, Florida 32202

Subject: Police Memorial Building; City Contract No. 8565-09
PCO #19 – East Phase 1 - Existing Penetrations & Fire Rating

Dear Mr. Hatton:

Per your field meeting with the building inspector, Robert Coulter, to review existing conditions, our understanding now is that Mr. Coulter is requiring "all existing penetrations and panels in the existing wall in East Phase 1 floor/ceiling be treated with a fire stop system. This is contrary to what we have been told was acceptable to pass inspection of existing "rated wall" inspection. Based on the field meetings with the 3M representative, the attached fire stop systems have been developed. Please review the following cost breakouts:

Self-Perform:
Labor & Materials: Installation of new fire stop systems----------$7,176.00
Contractor's overhead & profit (Self perform)----------$1,076.00

Subtotal: ----------$8,252.00

Total Proposed Change Order #19----------$8,252.00

Qualifications/Exclusions:
Based on typical/normal working hours and days.
The requirement for this work will cause a delay in the current schedule; to expedite, **please add $1,853.00,** for additional/overtime hours to bring the project back on schedule.

This change order work will require (12) calendar days extension of the contract time if accepted by no later than within seven (2) days of this notice.

Please let me know if you have questions.

Sincerely,

Greg Bowles

Greg Bowles
Core Construction Company, Inc.

8375 Baymeadows Way • Jacksonville, Florida 32256 • 904.399.1033 phone • 904.399.1074 fax

ACTIVITY & LOCATION
Police Memorial Building
PCO# 19 - Fire Sealants-floor penetrations
East Phase 1

NAME & ADDRESS OF CONTRACTOR
Core Construction Company
8375 Baymeadows Way, Jacksonville, FL 32256

BID DATE: 4/20/2016

TOTAL AREA
Duration 12 days

ITEM		QUANTITIES		LABOR COST		MATERIALS COST		SUB	
NO.	DESCRIPTION	NO. O	UNIT	UNIT COST	SUBTOTAL	UNIT COST	SUBTOTAL	CONTRACT	TOTAL
7	**Fire Sealants-floor penetrations**								
	Fire Caulking-Skilled	52	hrs	$ 28.00	$ 1,456.00		$ -	$ -	$ 1,456.00
	Fire Caulking-Semi-Skilled	52	hrs	$ 22.40	$ 1,164.80		$ -	$ -	$ 1,164.80
	3m Barrier Wrap Strip Utlra GS	1	LS			$ 2,328.00	$ 2,328.00	$ -	$ 2,328.00
	3m Fire Barrier Sealant	1	LS			$ 577.50	$ 577.50	$ -	$ 577.50
	Fire Barrier collar-Sheet metal & accessories	1	LS		$ -	$ 348.40	$ 348.40	$ -	$ 348.40
		0			$ -		$ -	$ -	$ -
	FIRE SEALANTS - SUBTOTALS				**$ 2,620.80**		**$ 3,253.90**	**$ -**	**$ 5,874.70**
8	**Fire rated access panels**								
	Fire-rated access panel-Skilled	12	hrs	$ 28.00	$ 336.00	$ -	$ -		$ 336.00
	Fire-rated access panel-Semi-Skilled	12	hrs	$ 22.40	$ 268.80	$ -	$ -		$ 268.80
	Fire-rated access panel-FB-5060-8x8	6	ea	$ -	$ -	$ 116.00	$ 696.00		$ 696.00
				$ -	$ -	$ -	$ -		$ -
	FIRE RATED ACCESS PANELS - SUBTOTALS				**$ 604.80**		**$ 696.00**	**$ -**	**$ 1,300.80**
									$ 7,175.50

Search Over 1,000,000 Products Go

3M Fire Barrier Wrap Strip, 40 ft. L, PK 5 - ULTRA GS

(http://www.sustainablesupply.com/SSC Images/C1792340_main-1.jpg)

List Price: ~~$1,199.52~~

$901.96

Free Shipping Orders $75+

Join rewards Get 5% back

Add to Cart

(/)

Get your search on...

Home (/) > Fall Protection, Facility & Traffic Safety Equipment (/fall-protection-facility-traffic-safety-equipment/c/14/) > Fire Protection (/fire-protection/c/4457/) > Fire Barrier Products (/fire-barrier-products/c/6420/) > Fire Barrier Sealant, 10.1 oz., Gray

Fire Barrier Sealant, 10.1 oz., Gray

3M (/b/3M/) | Zoro #: G3026107 | Mfr #: 3000 WT

$17.90 /ea

In stock

qty 1

Add to Cart

(/)

Get your search on...

Home (/) > Fall Protection, Facility & Traffic Safety Equipment (/fall-protection-facility-traffic-safety-equipment/c/14/) > Fire Protection (/fire-protection/c/4457/) > Fire Barrier Products (/fire-barrier-products/c/6420/) > Fire Barrier Restricting Collar, 25 ft. L

Fire Barrier Restricting Collar, 25 ft. L

3M (/b/3M/) | Zoro #: G8494044 | Mfr #: RC-1

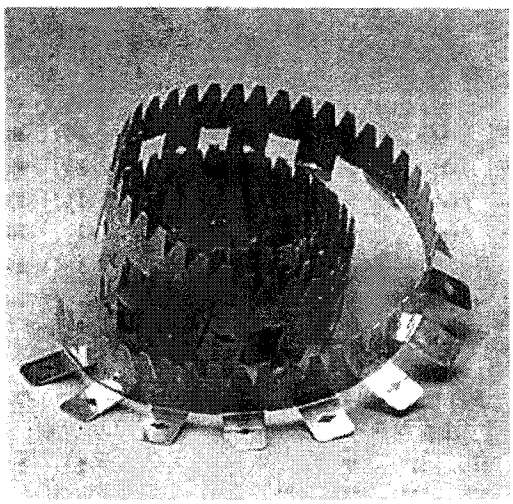

$75.89 /ea

Limited Stock

qty 1

Add to Cart

Ships from Zoro

This item ships FREE. Details

Standard ground shipping

Zoro's Favorite Products

Greg Bowles

From: Alan Karp [akarp@acudor.com]
Sent: Wednesday, March 02, 2016 3:38 PM
To: Greg Bowles
Subject: RE: Order One(1) Item# FB-5060 8x8 Fire Rated Access Door
Attachments: Acudor CC Order Form.pdf

You can order from us

1 – 8 x 8 FB-5060 fire rated access door - $116.00 – freight tincluded

Alan Karp
President
Acudor Products, Inc.
973-575-5120
akarp@acudor.com
www.acudor.com

From: Greg Bowles [mailto:gbowles@core-constructionco.com]
Sent: Wednesday, March 02, 2016 3:37 PM
To: Alan Karp <akarp@acudor.com>
Subject: Order One(1) Item# FB-5060 8x8 Fire Rated Access Door

Can I order direct from you, or do I need to contact a local distributor?

Thank you,

Greg Bowles
Project Manager, Core Construction Company
8375 Baymeadows Way, Jacksonville, FL 32256
C 904-813-3236
P 904-399-1033
F 904-399-1074

CORE
CONSTRUCTION
COMPANY

System No. F-A-2045

January 26, 2010
F Rating – 2 Hr
T Rating – 3/4 Hr

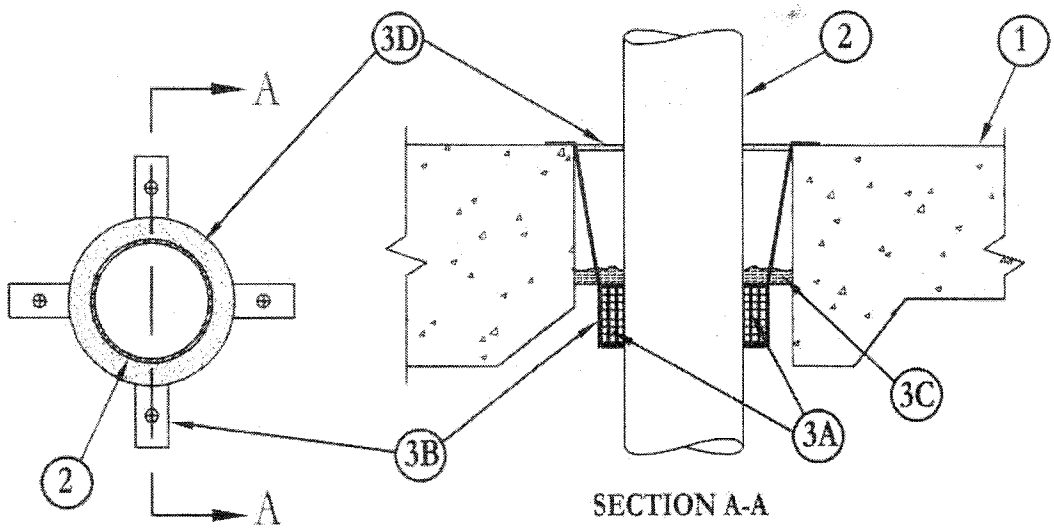

1. **Floor Assembly** – The fire-rated unprotected concrete and steel floor assembly shall be constructed of the materials and in the manner specified in the individual D900 Series designs in the Underwriters Laboratories Inc. Fire Resistance Directory and as summarized below:
   A. **Concrete** – Min 2-1/2 in. (64 mm) thick reinforced lightweight or normal weight (100-150 pcf or 1600 - 2400 kg/m³) concrete.
   B. **Welded Wire Fabric** – 6x6 W1.4xW1.4.
   C. **Steel Floor and Form Units*** – Composite or noncomposite 1-1/2 in. (38 mm) deep fluted galv units as specified in the individual Floor-Ceiling design. Max diam of opening is 6 in. (152 mm).
   D. **Steel sleeve** – (Optional- Not Shown) Max 6 in. (152 mm) ID (or smaller) 28 Ga (or heavier) fabricated steel sheet sleeve cast, grouted or inserted into floor assembly, may be installed with a max of 1 in. (25 mm) extension above floor and max extension of 2 in. (51 mm) below floor.
2. **Through Penetrants** – One nonmetallic pipe or conduit to be centered within opening. The annular space between pipe or conduit and periphery of opening shall be 1/2 in. (13 mm) for nom 2 in. (51 mm) diam pipes and smaller, and shall be 3/4 in. (19 mm) for pipes greater than nom 2 in. (51 mm). Pipe or conduit to be rigidly supported on both sides of the floor or wall assembly. The following types and sizes of nonmetallic pipes or conduits may be used:
   A. **Polyvinyl Chloride (PVC) Pipe** – Nom 4 in. (102 mm) diam (or smaller) Schedule 40 solid core or cellular core PVC pipe for use in closed (process or supply) or vented (drain, waste or vent) piping systems.
   B. **Rigid Nonmetallic Conduit**++ – Nom 4 in. (102 mm) diam (or smaller) Schedule 40 PVC conduit installed in accordance with Article 347 of the National Electrical Code (NFPA No. 70).
   C. **Chlorinated Polyvinyl Chloride (CPVC) Pipe** – Nom 4 in. (102 mm) diam (or smaller) SDR13.5 CPVC pipe for use in closed (process or supply) piping systems.
   D. **Acrylonitrile Butadiene Styrene (ABS) Pipe** – Nom 4 in. (102 mm) diam (or smaller) Schedule 40 solid core or cellular core ABS pipe for use in closed (process or supply) or vented (drain, waste or vent) piping systems.
   E. **Fire Retardant Polypropylene (FRPP) Pipe** – Nom 4 in. (102 mm) diam (or smaller) Schedule 40 FRPP pipe for use in closed (process or supply) or vented (drain, waste or vent) piping systems.
3. **Firestop System** – The details of the firestop system shall be as follows:
   A. **Fill, Void or Cavity Materials*** – **Wrap Strip** – Nom 1/8 in. (3.2 mm) thick flexible intumescent material supplied in 2 in. (51 mm) wide rolls. Nom 2 in. (51 mm) wide strips tightly wrapped around nonmetallic pipe prior to recessing into opening. For nom 1/2 in. (13 mm) to nom 1-1/2 in. (38 mm) diam pipes a min of one layer of wrap is required. For nom 2 in. (51 mm) diam pipes a min of 2 layers of wrap are required. For nom 2-1/2 and 3 in. (64 and 76 mm) diam pipes a min of 3 layers of wrap are required. For nom 3-1/2 and 4 in. (89 and 102 mm) diam pipes a min of 4 layers of wrap are required. Wrap to be continuously wrapped around pipe in one piece and temporarily held in place with tape.

      3M COMPANY – Ultra GS
   B. **Steel Collar** – Nom 2 in. (51 mm) deep collar with 1-1/4 in. (32 mm) wide by 2 in. (51 mm) long anchor tabs and min 1/2 in. (13 mm) long tabs to retain wrap layers. Coils of precut 0.016 in. thick (0.41 mm) (28 gauge) galv sheet steel available from wrap manufacturer. Collar may also be field-fabricated. Steel collar wrapped tightly around applied wrap with min 1 in. (25 mm) overlap at seam. Collar for nom 3 to 4 in. (76 to 102 mm) penetrants shall be secured around applied wrap with three No. 6 by 1/4 in. (6 mm) long steel sheet metal screws installed in the vertical axis at the center of the 1 in. (25 mm) overlap along the perimeter joint of the collar. Collars for nom 2-1/2 in. (64 mm) diam (and smaller) penetrants shall be secured with at least two 18 ga. (or heavier) wire ties. Collar retainer tabs shall be bent 90° toward pipe to hold applied wrap. Prior to recessing collar assembly into opening, hanger straps to be fabricated out of min 0.016 in. (0.41 mm) thick (28 gauge) sheet steel. Hanger straps to be tapered from 1/4 in. (6 mm) wide to 1-1/4 in. (32 mm) wide and be

System No. F-A-2045 *continued*

of sufficient length so when attached to anchor tabs they lap onto floor a min of 1 in. (25 mm). For nom max 2 in. (51 mm) (and smaller) penetrants, two hangers are required. For nom 2-1/2 and 3 in. (64 and 76 mm) penetrants, three hangers are required. For nom 3-1/2 and 4 in. (89 and 102 mm) penetrants, four hangers are required. Hangers to be secured to collar assembly by inserting 1/4 in. (6 mm) end into slot opening in collar anchor tab and bending 180°. Hangers may also be constructed from RC-1 Restricting Collar by cutting the width of the collar from the anchor tab (larger tab) through the collar body to the retaining tab (smaller tapered tab). For thicker concrete, additional hangers may be hooked together as described. Assembly to be slid into the opening and recessed approximately 1-3/4 in. (44 mm) below the top surface of the floor. Hangers to be bent 90° onto floor surface. A min 1 in. (25 mm) overlap onto floor surface is required. Collars may or may not be secured to top of floor with masonary anchors. When steel sleeve (Item 1D) is used and extends above floor surface hangars are to be bent 180 degrees on to steel sleeve and overlap on to floor a min of 1 in. (25 mm).

C. **Packing Material** – Min 1/2 in. (13 mm) thickness of 4 pcf (64 kg/m^3) mineral wool batt insulation firmly packed into the annular space on top of collar between the pipe and side of opening.

D. **Fill, Void or Cavity Material – Caulk or Sealant** – Min 1/4 in. (6 mm) thickness of fill material applied within the annular space, flush with top surface of floor.

3M COMPANY – CP 25WB+ caulk, FB-3000 WT sealant, FB-1000 NS sealant, FB-1003 SL sealant or IC 15WB+ caulk. (Note: CP 25WB+ not suitable for use with CPVC pipes.)

*Bearing the UL Classification Mark
++Bearing the UL Listing Mark

Reprinted from the Online Certifications Directory with permission from Underwriters Laboratories Inc.
Copyright © 2010 Underwriters Laboratories Inc.®

Note: Systems with Nonmetallic Through Penetrant(s) have not been evaluated with a pressure differential of 50 Pa between the exposed and unexposed surfaces as required by the National Building Code of Canada.

System No. F-A-2130

October 07, 2010
F Rating – 2 Hr
T Rating – 2 Hr

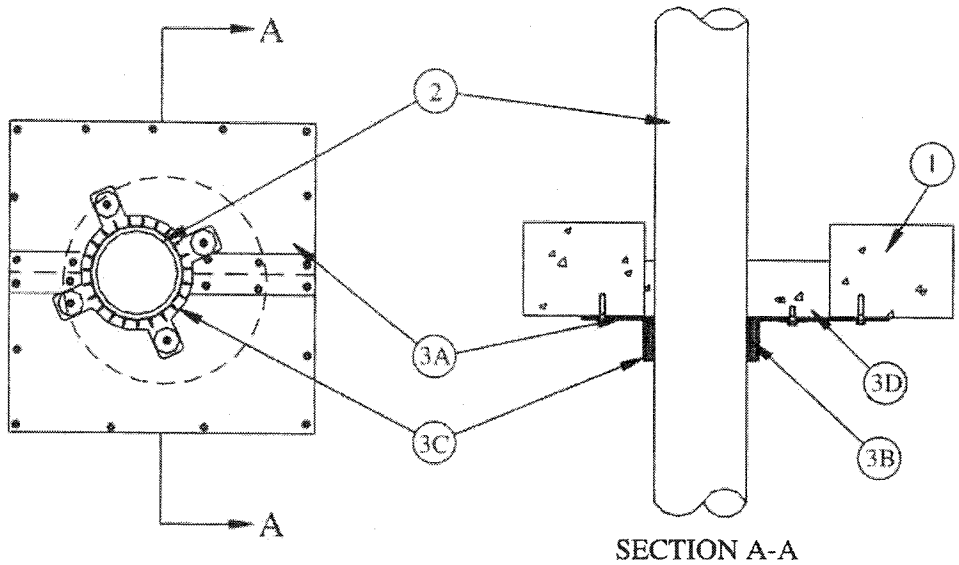

1. **Floor Assembly** – Min 4-1/2 in. (114 mm) thick reinforced lightweight or normal weight (100-150 pcf or 1600-2400 kg/m³) concrete. Max diam of opening is 9 in. (229 mm).
2. **Through Penetrants** – One nonmetallic pipe or conduit to be installed either concentrically or eccentrically within the firestop system. The annular space between penetrant and periphery of opening shall be min 1/4 in. (6 mm) to max 4-1/4 in. (108 mm). Penetrant to be rigidly supported on both sides of floor assembly. The following types and sizes of pipes or conduit may be used:
   A. **Polyvinyl Chloride (PVC) Pipe** – Nom 4 in. (102 mm) diam (or smaller) Schedule 40 solid core or cellular core PVC pipe for use in closed (process or supply) or vented (drain, waste or vent) piping systems.
   B. **Chlorinated Polyvinyl Chloride (CPVC) Pipe** – Nom 4 in. (102 mm) diam (or smaller) SDR13.5 CPVC pipe for use in closed (process or supply) piping systems.
   C. **Rigid Nonmetallic Conduit**++ – Nom 4 in. (102 mm) diam (or smaller) Schedule 40 PVC conduit installed in accordance with Article 347 of the National Electric Code (NFPA No. 70).
3. **Firestop System** – The firestop system shall consist of the following:
   A. **Steel Cover Plate** – Min 24 gauge galv steel cover plate, sized to overlap opening a min of 3 in. 76 mm) on all sides. Opening in plate for penetrant to be sized to the outside diam of penetrant. Plate attached to bottom of floor with min 3/16 in. (4.8 mm) diam by 1-1/4 in. (32 mm) long steel masonry anchors spaced a max of 6 in. (152 mm) OC. Seams in plate covered with min 2 in. (51 mm) wide 28 gauge (or heavier) galv steel strip attached to cover plate with No. 10 (or larger) steel screws on each side of seam spaced a max of 3 in. (76 mm) OC.
   B. **Fill, Void or Cavity Material* – Wrap Strip** – Nom 1/8 in. (3.2 mm) thick intumescent material supplied in 2 in. (51 mm) wide strips. Wrap strip tightly wrapped around nonmetallic drain pipe (Item 4) located below floor. The top edge of the wrap strips shall abut the bottom edge of the compression coupling (Item 3). For nom 2 in. (51 mm) diam (and smaller) pipes, two layers are required. For nom 2-1/2 in. (64 mm) to 3 in. (76 mm) diam pipes, three layers are required. For nom 3-1/2 in. (89 mm) and 4 in. (102 mm) diam pipes, four layers are required. Wrap strip layers temporarily held in position using aluminum foil tape, steel wire tie, or equivalent.

      3M COMPANY – Ultra GS
   C. **Steel Collar** – Nom 2 in. (51 mm) deep collar with 1-1/4 in. (32 mm) wide by 2 in. (51 mm) long anchor tabs and min 1/2 in. (13 mm) long tabs to retain wrap strip layers. Coils of precut 0.016 in. (0.41 mm) thick (28 gauge) galv sheet steel available from wrap strip manufacturer. As an alternate, collar may be field-fabricated from min 0.016 in. (0.41 mm) thick (28 gauge) galv sheet steel in accordance with instruction sheet supplied by wrap strip manufacturer. Steel collar, with anchor tabs bent outward 90 deg, wrapped tightly around wrap strip layers with min 1 in. (25 mm) overlap at seam. Anchor tabs to be pressed tightly against cover plate, and collar to be compressed around wrap strip layers using a min 1/2 in. (13 mm) wide stainless steel clamp at the collar midheight. As an alternate to the band clamp, collar for systems with three or more layers of wrap strip may be fastened together along with three No. 6 by 3/8 in. (10 mm) long self-tapping steel screws. Collar to be secured to cover plate with No. 10 (or larger) by min 3/4 in. (19 mm) long steel screws in conjunction with min 1-1/4 in. (32 mm) diam steel washers. Min of two, three or four anchor bolts, symmetrically located, for nom 2 in. (51 mm) diam (and smaller), nom 2-1/2 to 3 in. (64 to 76 mm) diam and nom 3-1/2 to 4 in. (89 to 102 mm) diam pipes, respectively.
   D. **Fill, Void or Cavity Material* – Mortar** – Min 3 in. (76 mm) thickness of mortar applied within the annulus on top surface of cover plate, flush with bottom surface of floor.

      3M COMPANY – 3M Fire Barrier Mortar

++Bearing the UL Listing Mark
*Bearing the UL Classification Mark

Reprinted from the Online Certifications Directory with permission from Underwriters Laboratories Inc.
Copyright © 2011 Underwriters Laboratories Inc.®

System No. F-A-8015

June 09, 2004
F Rating – 3 Hr
T Ratings – 1/2, 3/4 and 3 Hr (See Item 2)

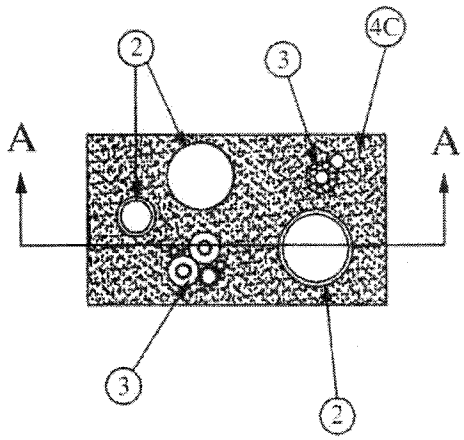

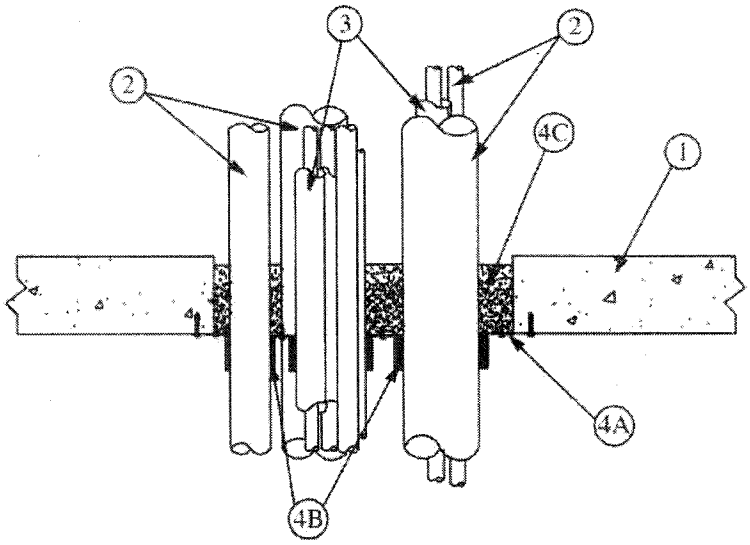

SECTION A-A

1. **Floor Assembly** – Min 4-1/2 in. (114 mm) thick reinforced lightweight or normal weight (100-150 pcf or 1600-2400 kg/m3) concrete. Max size of opening shall be 180 in2 (1161 cm2) with a max dimension of 18 in. (457 mm).
2. **Through Penetrants** – Penetrants to be rigidly supported on both sides of floor assembly. Any combination of the following penetrants may be used:
   A. **Steel Duct** – Nom 4 in. (102 mm) (or smaller) 30 gauge (or heavier) steel duct installed concentrically or eccentrically within opening. The annular space between duct and periphery of opening shall be min 1/4 in. (6 mm) to max 4 in. (102 mm). The annular space between duct and other penetrant shall be min 2 in. (51 mm).
   B. **Nonmetallic Pipes** – Nonmetallic pipe or conduit installed concentrically or eccentrically within opening. The annular space between nonmetallic pipe or conduit and periphery of opening shall be min 2 in. (51 mm) to max 4 in. (102 mm). The annular space between nonmetallic pipe or conduit and other penetrant shall be min 2 in. (51 mm). The following types and sizes of nonmetallic pipes or conduits may be used:
      1. **Polyvinyl Chloride (PVC) Pipe** – Nom 4 in. (102 mm) diam (or smaller) Schedule 40 solid core or cellular core PVC pipe for use in vented (drain, waste or vent) piping system.
      2. **Acrylonitrile Butadiene Styrene (ABS) Pipe** – Nom 4 in. (102 mm) diam (or smaller) Schedule 40 solid core or cellular core ABS pipe for use in vented (drain, waste or vent) piping systems.
      3. **Fire Retardant Polypropylene (FRPP) Pipe** – Nom 4 in. (102 mm) diam (or smaller) Schedule 40 FRPP pipe for use in vented (drain, waste or vent) piping system.
   C. **Double HVAC Line Set** – Pipes, tubing or cable to be tightly bundled within the opening. The annular space between the line set bundle and periphery of opening shall be min 1 in. (25 mm) to max 4 in. (102 mm). The annular space between the line set bundle and other penetrants shall be a min 2 in. (51 mm). The following types and sizes of penetrants may be used:
      1. **Metallic Pipes** – A max of four pipes or tubes installed within opening. The following types and sizes of metallic pipes, conduits or tubing may be used:
         1. **Copper Tubing** – Nom 3/4 in. (19 mm) diam (or smaller) Type L (or heavier) copper tubing.
         2. **Copper Pipe** – Nom 3/4 in. (19 mm) diam (or smaller) Regular (or heavier) copper pipe.

         All pipes or tubing larger than nom 1/2 in. (13 mm) diam shall be provided with tube insulation (Item C4).
      2. **Polyvinyl Chloride (PVC) Pipe** – A max of one nom 1 in. (25 mm) diam (or smaller) Schedule 40 solid core or cellular core PVC pipe for use in closed (process or supply) or vented (drain, waste or vent) piping systems.
      3. **Cables** – A max of two, max 8/C No. 18 AWG (or smaller) thermostat cables; XLPE or PVC insulation with XLPE or PVC jacket.
      4. **Tube Insulation-Plastics+** – Nom 1/2 in. (13 mm) thick (or less) acrylonitrile butadiene/polyvinyl chloride (AB/PVC) flexible foam furnished in the form of tubing.

         See **Plastics** (QMFZ2) category in the Plastics Recognized Component Directory for names of manufacturers. Any Recognized Component tube insulation material meeting the above specifications and having a UL 94 Flammability Classification of 94-5A may be used.

System No. F-A-8015 *continued*

D. **Single HVAC Line Set** – Pipes, tubing or cable to be bundled within the opening. The annular space between the line set penetrants shall be min 0 in. (0 mm) (point contact) to max 1 in. (25 mm). The annular space between the line set bundle and periphery of opening shall be min 1 in. (25 mm) to max 4 in. (102 mm). The annular space between the line set bundle and other penetrants shall be a min 2 in. (51 mm). The following types and sizes of penetrants may be used:

1. **Metallic Pipes** – A max of two pipes or tubes installed within opening. The following types and sizes of metallic pipes, conduits or tubing may be used:

   A. **Copper Tubing** – Nom 3/4 in. (19 mm) diam (or smaller) Type L (or heavier) copper tubing.

   B. **Copper Pipe** – Nom 3/4 in. (19 mm) diam (or smaller) Regular (or heavier) copper pipe.

   All pipes or tubing larger than nom 1/2 in. (13 mm) diam shall be provided with pipe covering (Item D4).

2. **Cables** – One max 8/C No. 18 AWG (or smaller) thermostat cables; XLPE or PVC insulation with XLPE or PVC jacket.

3. **Tube Insulation-Plastics+** – Nom 1/2 in. (13 mm) thick (or less) acrylonitrile butadiene/polyvinyl chloride (AB/PVC) flexible foam furnished in the form of tubing.
   See **Plastics** (QMFZ2) category in the Plastics Recognized Component Directory for names of manufacturers. Any Recognized Component tube insulation material meeting the above specifications and having a UL 94 Flammability Classification of 94-5A may be used.

   The hourly F Rating for the firestop system is 1/4 Hr for penetrants A and C, 1/2 Hr for penetrants B1, B2, and D and 3 for penetrants B3.

3. **Firestop System** – The firestop system shall consist of the following:

A. **Forms** – Min 24 gauge (or heavier) galv sheet metal cut to the contour of the penetrants and secured to the underside of the floor with min 3/16 in. (4.8 mm) diam by min 1-1/4 in. (32 mm) steel masonry anchors as a permanent form.

B. **Fill, Void or Cavity Material* – Wrap Strip** – Nom 1/8 in. (3.2 mm) thick intumescent material supplied in 2 in. (51 mm) wide strips. Wrap strip tightly wrapped around nonmetallic pipes or conduits (Item 2B) and around the double HVAC line set (Item 2C) below floor. The top edge of the wrap strips shall be tightly butted to the underside of the sheet metal form (Item 3A). For nom 2 in. (51 mm) diam (and smaller) pipes, two layers are required. For nom 2-1/2 in. (64 mm) to 3 in. (76 mm) diam pipes, three layers are required. For nom 3-1/2 in. (89 mm) and 4 in. (102 mm) diam pipes, four layers are required. For the double HVAC line set, three layers are required. Wrap strip layers temporarily held in position using aluminum foil tape, steel wire tie, or equivalent. Wrap strip not used for penetrants 2A and 2D.

   3M COMPANY – Ultra GS

C. **Steel Collar** – Nom 2 in. (51 mm) deep collar with 1-1/4 in. (32 mm) wide by 2 in. (51 mm) long anchor tabs and min 1/2 in. (13 mm) long tabs to retain wrap strip layers. Coils of precut 0.016 in. (0.41 mm) thick (28 gauge) galv sheet steel available from wrap strip manufacturer. As an alternate, collar may be field-fabricated from min 0.016 in. (0.41 mm) thick (28 gauge) galv sheet steel in accordance with instruction sheet supplied by wrap strip manufacturer. Steel collar, with anchor tabs bent outward 90 deg, wrapped tightly around wrap strip layers with min 1 in. (25 mm) overlap at seam. Anchor tabs to be pressed tightly against floor or wall surface(s), and collar to be compressed around wrap strip layers using a min 1/2 in. (13 mm) wide by 0.028 in. (0.71 mm) thick stainless steel band clamp at the collar midheight. Collar to be secured to sheet metal form with min No. 10 by min 1/2 in. (13 mm) long steel sheet metal screws in conjunction with min 1-1/4 in. (32 mm) diam steel washers. Min of four screws, symmetrically located, for nom 2 in. diam (and smaller) pipes and for the double HVAC line set. Min six screws, symmetrically located, for nom 2-1/2 and 3 in. (64 and 76 mm) diam pipes. Min eight screws, symmetrically located, for nom 3 and 3-1/2 in. (76 and 89 mm) diam pipes.

D. **Fill, Void or Cavity Material* – Mortar** – Mortar to be mixed with water in accordance with the manufacturer\'s instructions. Min 3 in. (76 mm) thickness of mortar applied within the annulus.

   3M COMPANY – Fire Barrier Mortar

+Bearing the UL Recognized Component Mark
*Bearing the UL Classification Mark

Reprinted from the Online Certifications Directory with permission from Underwriters Laboratories Inc.
Copyright © 2010 Underwriters Laboratories Inc.®

Note: This system was tested with a pressure differential of 50 Pa between the exposed and unexposed surfaces with the higher pressure on the exposed side.

System No. F-E-1028

July 30, 2009
F Rating – 1 Hr
T Rating – 0 Hr

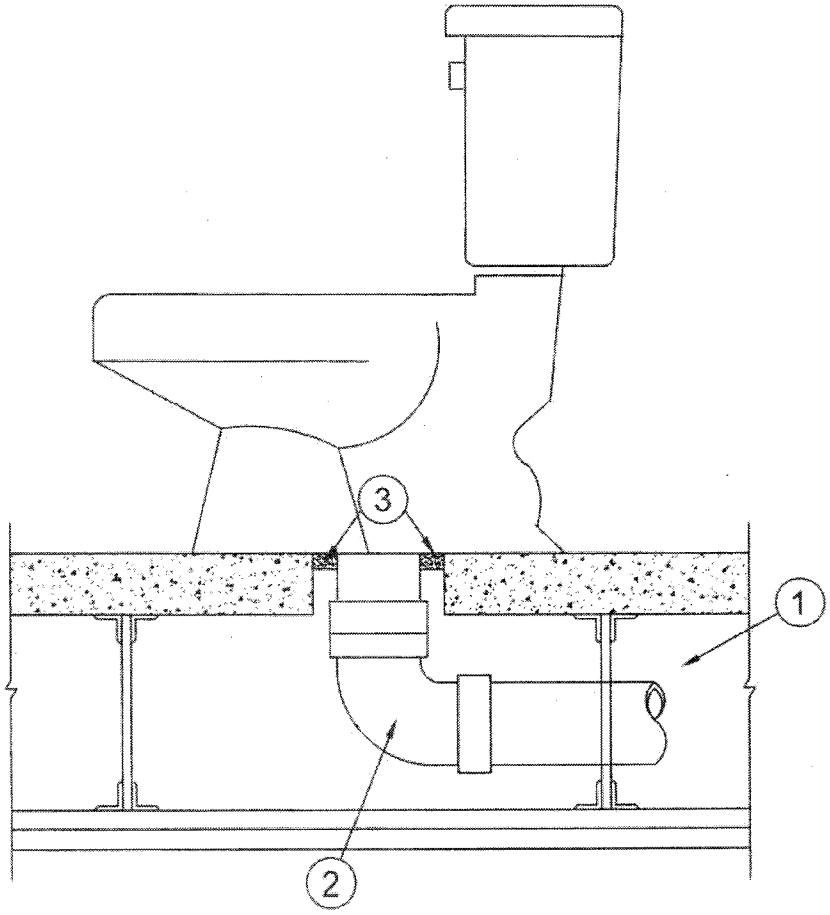

1. **Floor-Ceiling Assembly** – The 1 hr fire rated concrete and steel joist Floor-Ceiling assembly shall be constructed of the materials and in the manner described in the individual G500 Series Design in the UL Fire Resistance Directory, as summarized below:
   A. **Flooring** – Lightweight or normal weight (100-150 pcf or 1600-2400 kg/m³) concrete as specified in the individual G500 Series Design. Diam of opening shall be max 1 in. (25 mm) larger than the nom diam of pipe (Items 2 and 3).
   B. **Joists** – Steel joists or **Structural Steel Members*** as specified in the individual G500 Series Design.
   C. **Gypsum Board*** – Min 5/8 in. (16 mm) thick, screw-attached to furring channels as specified in the individual G500 Series Design. Max diam of opening is 5-1/2 in. (140 mm).
2. **Metallic Pipe** – One metallic drain pipe with max 4 in. (102 mm) diam toilet flange installed within the firestop system. The annular space between drain pipe and periphery of opening shall be min 1/2 in. to max 1-1/2 in. Pipe to be rigidly supported on lower side of floor assembly. The following types and sizes of metallic pipes, fittings and flanges may be used:
   A. **Iron Pipe** – Nom 4 in. diam (or smaller) Schedule 40 cast iron pipe for use in vented (drain, waste or vent) piping system. Pipe and elbow reliably supported above ceiling.
   B. **Copper Pipe** – Nom 4 in. diam (or smaller) Type DWV copper pipe for use in vented (drain, waste or vent) piping systems. Pipe and elbow reliably supported above ceiling.
3. **Fill, Void or Cavity Materials*** – **Caulk or Sealant** – Min 1/2 in. (13 mm) thickness of caulk applied within annular space around perimeter of ABS Pipe (Item 2), flush with top surface of floor.
   3M COMPANY – IC 15WB+, CP 25WB+, FB-3000WT
4. **Water Closet** – Floor mounted vitreous china water closet.

*Bearing the UL Classification Mark

CORE
CONSTRUCTION
COMPANY

May 18, 2016

Mr. Steven Hatton
Contract Administration Section
City of Jacksonville
214 N. Hogan Street
Jacksonville, Florida 32202

Subject: Police Memorial Building; City Contract No. 8565-09
PCO #20 – East Phase 1 – Ceramic Fire Wrap Insulation

Dear Mr. Hatton:

Per RFI 52, regarding the existing metal duct, and pursuant to the direction given by Mechanical Engineer, to install the ceramic fire wrap; Please review the following cost breakouts:

Subcontractor:
Labor & Materials: Installation of ceramic fire wrap----------$1,876.64
Contractor's overhead & profit (subcontractor)----------$ 187.66

Subtotal: ----------$2,064.30

Total Proposed Change Order #20----------$2,064.30

Qualifications/Exclusions:
Based on typical/normal working hours and days.
The requirement for this work will cause a delay in the current schedule. The material is not a stock item.
This change order work will require fifteen (15) calendar days extension of the contract time if accepted by no later than within two (2) days of this notice.

Please let me know if you have questions.

Sincerely,

Greg Bowles

Greg Bowles
Core Construction Company, Inc.

8375 Baymeadows Way • Jacksonville, Florida 32256 • 904.399.1033 phone • 904.399.1074 fax

(1/2) <Subject - Fwd:> I will put in an official form later the quote to ride the duck in the fire wrap is $1,876.64
I have to order the wrap in if I call befor
(2/2) e 2:30 today I can have it overnighted and it will be in tomorrow
if not that I have it overnighted and it will be in Friday need the okay

PMB - PCO #20

CORE
CONSTRUCTION
COMPANY

August 22, 2016

Mr. Steven Hatton
Contract Administration Section
City of Jacksonville
214 N. Hogan Street
Jacksonville, Florida 32202

Subject: Police Memorial Building; City Contract No. 8565-09
PCO #22-Additional Fire Rated Access Panels -East Phase

Dear Mr. Hatton,

Pursuant to COJ Building Inspector requirements; the COJ Building Department has required that the access panels in the East Stair Well be upgrades to Fire Rated Access Panels. The following costs include the removal of the existing, installation of new panels, and painting in East stair wells. Please review the following cost breakouts:

Self-perform:
Labor, materials, & equipment----------$ 1,117.07
Contractor's overhead & profit ----------$ 167.56

Subtotal: ----------$ 1,284.63

Total Proposed Change Order #22----------$ 1,284.63

This change order work will require (14) calendar days extension of the contract time if accepted by no later than within seven (7) days of this notice.

Please let me know if you have questions.

Sincerely,

Greg Bowles

Greg Bowles
Core Construction Company, Inc.

8375 Baymeadows Way • Jacksonville, Florida 32256 • 904.399.1033 phone • 904.399.1074 fax

ACTIVITY & LOCATION
Police Memorial Building
PCO 22 - Additional Fire Rated Access Panels
Required by COJ Building Department
East Stair Well

NAME & ADDRESS OF CONTRACTOR
Core Construction Company
8375 Baymeadows Way, Jacksonville, FL 32256

DATE: 8/22/2016

TOTAL AREA
Duration 6 days

ITEM NO.	DESCRIPTION	QUANTITIES NO. O	UNIT	LABOR COST UNIT COST	LABOR COST SUBTOTAL	MATERIALS COST UNIT COST	MATERIALS COST SUBTOTAL	SUB CONTRACT	TOTAL
8	**Doors**								
	Access Panels -Skilled	6	hrs	$ 28.00	$ 168.00		$ -	$ -	$ 168.00
	Access Panels -Semi Skilled	6	hrs	$ 22.40	$ 134.40		$ -	$ -	$ 134.40
	Fire Rated Access Panels (16 x 16)	1	LS	$ -	$ -	$ 695.06	$ 695.06	$ -	$ 695.06
	GYP ASSEMBLY - SUBTOTALS				**$ 302.40**		**$ 695.06**	**$ -**	**$ 997.46**
9	**PAINTING**								
	Paint-ext walls-Skilled	2	hrs	$ 28.00	$ 56.00		$ -	$ -	$ 56.00
	Paint-ext walls	1	LS	$ -	$ -	$ 63.61	$ 63.61	$ -	$ 63.61
	PAINTING -SUBTOTALS				**$ 56.00**		**$ 63.61**	**$ -**	**$ 119.61**
									$ -

TOTAL	**$ 1,117.07**

Greg Bowles

From: sampopoff@bellsouth.net
Sent: Friday, July 15, 2016 2:33 PM
To: gbowles@core-constructionco.com; jaychung@core-constructionco.com
Cc: amanda@core-constructionco.com
Subject: Second floor main stairway landing
Attachments: IMAG0790.jpg

Robert mention all access panels on rated walls must be fire rated. Please RFI to Steve Lazar.
Sent from my Boost Mobile phone.

Search

Go

Advanced Search

Checkout - Show Total

Item	Quant.	Description	Price
FW-5050-16X16	4	Fire Rated Access Door	$639.96
		Sub Total:	$639.96
		Shipping & Handling:	$55.10
		Total:	$695.06

Live Support
Ask a Question here
Click and we call you
Your Recent Items
Acudor FW5050
Categories
Access Doors
Roof Hatches
Smoke Vents
Floor Doors
Fire Extinguisher Cabinets
Fire Extinguishers
Fire Blanket Cabinets
Fire Hose Cabinets
Fire Extinguisher Stands
Fire Extinguisher Brackets
Fire Extinguisher Cover
Fire Extinguisher Signs
Fire Extinguisher Alarm
Firestopping Sealants
Foam Sealants
Replacement Parts
Fire Alarm Cover
Thermostat Cover
Control Panel Cabinets
First Aid Cabinets
Portable Eyewash Station
Exit Signs
Valve Boxes
Wire Guards
Hallmann Sales
Bookmark this page
ADA Guidelines
Email List
Shipping Policy
Return Policy
Privacy Policy
Terms of Use
Sitemap
Distributor Program

Please choose one of our secure checkout options

VISA MasterCard DISCOVER

Pay Now

Express Checkout

Check out with PayPal

The safer, easier way to pay

You can also call us and place your order over the phone

BBB. ACCREDITED BUSINESS

Click for Review

PayPal CREDIT

Get 6 Months to pay on $99+

Check out with PayPal and choose PayPal Credit

Subject to credit approval. See terms at business.com.

NFPA MEMBER 2015-2016

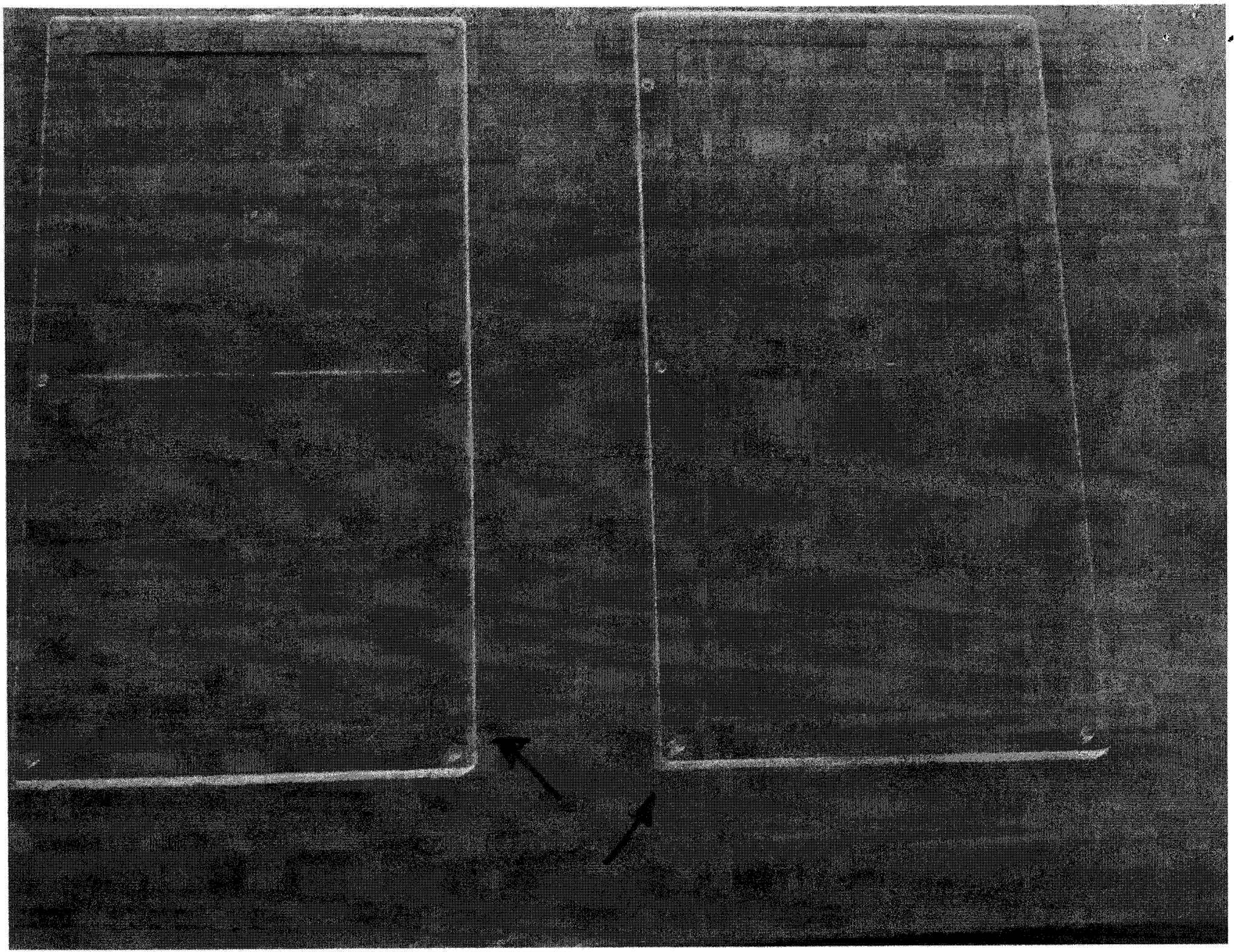

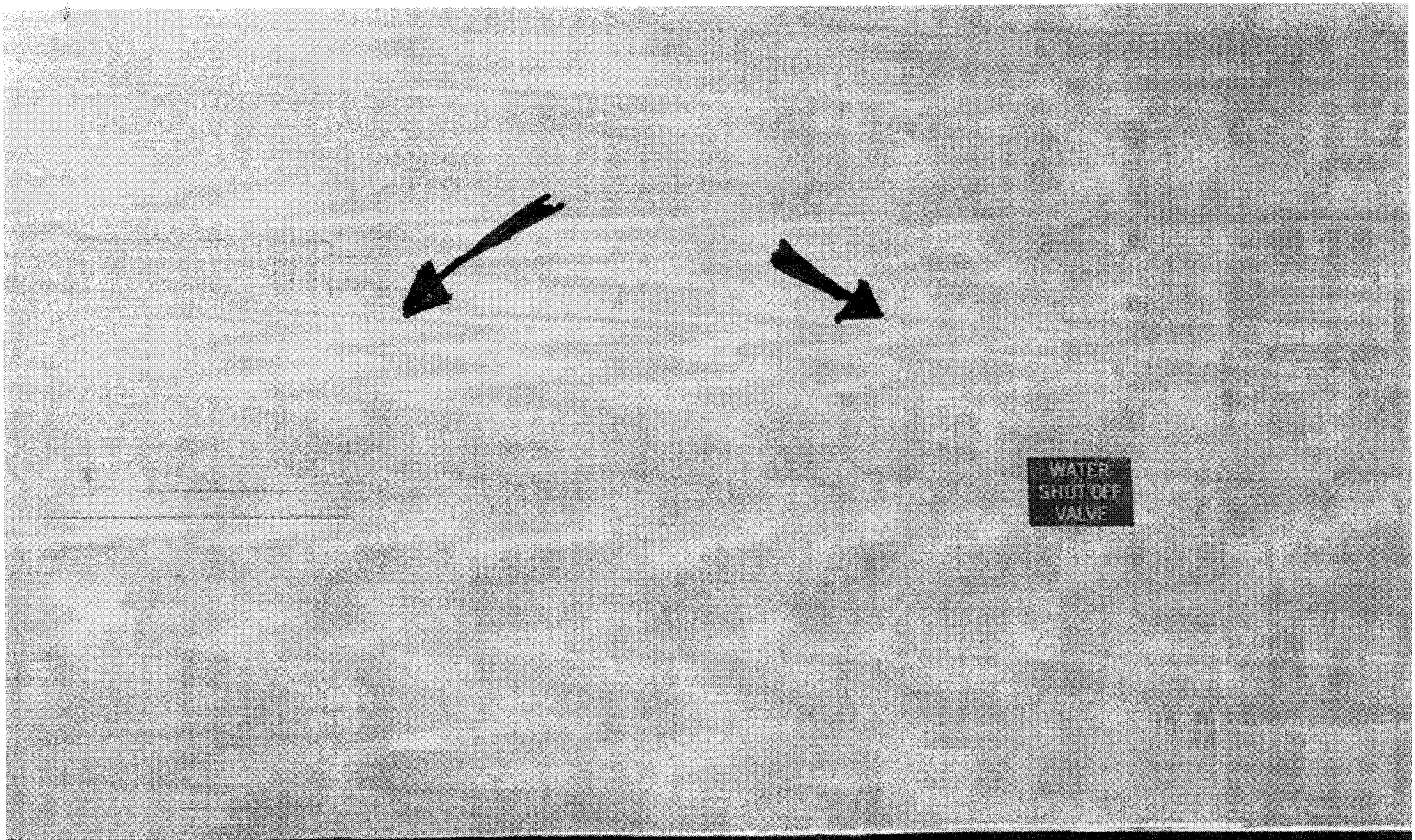
WATER
SHUT OFF
VALVE

CORE
CONSTRUCTION
COMPANY

September 2, 2016

Mr. Steven Hatton
Contract Administration Section
City of Jacksonville
214 N. Hogan Street
Jacksonville, Florida 32202

Subject: Police Memorial Building; City Contract No. 8565-09
PCO #25 – East Phase 2 – Ceramic Fire Wrap Insulation

Dear Mr. Hatton:

As noted in RFI #59; and per the directions given for RFI #52, regarding the existing metal duct, and pursuant to the direction given by Mechanical Engineer, to install the ceramic fire wrap; Please review the following cost breakouts:

Subcontractor:
Labor & Materials: Installation of ceramic fire wrap----------$3,416.67
Contractor's overhead & profit (subcontractor)----------$ 341.67

Subtotal: ----------$3,758.34

Total Proposed Change Order #25----------$3,758.34

Qualifications/Exclusions:
Based on typical/normal working hours and days.
The requirement for this work will cause a delay in the current schedule. The material is not a stock item.
This change order work will require fifteen (15) calendar days extension of the contract time if accepted by no later than within two (2) days of this notice.

Please let me know if you have questions.

Sincerely,

Greg Bowles

Greg Bowles
Core Construction Company, Inc.

8375 Baymeadows Way • Jacksonville, Florida 32256 • 904.399.1033 phone • 904.399.1074 fax

HVAC PROPOSAL

Owners Rep # 25

CHILLY WILLY'S HEATING & AIR INC. CACI8I6342

OFFICE- 904-772-1164 FAX- 904- 397-5017 P.O.BOX 440100 JACKSONVILLE FL 32222

CUSTOMER
CORE

ESTIMATE NO

DATE
9/1/2016

ADDRESS

CITY/STATE/ZIP

PHONE

E-MAIL

SALESPERSON
WILL

PROJECT
PMB

PREPARED BY:
WILL

ATTENTION
GREG

PAYMENT TERMS

DUE DATE

QUOTE GOOD FOR 30 DAYS

QUANTITY	DESCRIPTION	UNIT PRICE	AMOUNT
	CHANGE ORDER PMB	$ 3,416.67	$ 3,416.67
	FIRE WARP THE EXHUAST DUCT FROM 2ND FLOOR TO THE 1ST FLOOR IN THE BACK WALL OF THE EAST SIDE MENS REST ROOMS AND OUT 3 FEET INTO RESTROOMS PINS STRAPS AND LABOR		
	MUST SIGN AND RETURN IF QUOTE IS ACCEPTED		

THIS PROPOSAL INCLUDES THE CONDITIONS NOTED:

SUBTOTAL	
TAX RATE	
SALES TAX	
OTHER	
TOTAL	$ 3,416.67

Sign Here to Accept Quote:

Authorized Rep

Date

CORE
CONSTRUCTION
COMPANY

August 1, 2016

Mr. Steven Hatton
Contract Administration Section
City of Jacksonville
214 N. Hogan Street
Jacksonville, Florida 32202

Subject: Police Memorial Building; City Contract No. 8565-09
PCO #24 – Replacement of rusted & deteriorated framing

Dear Mr. Hatton,

Pursuant to RFI #56 and per the detail provided (reply to RFI #44); for the scope of work to replace the rusted and deteriorated framing in East Phase 2 (Rms 138;2142;3104; 3109a); please review the following cost breakouts:

Self-perform:
Labor, materials, & equipment----------$ 7,318.00
Contractor's overhead & profit ----------$ 1,097.00

Subtotal: ----------$ 8,415.00

Total Proposed Change Order #24----------$ 8,415.00

This change order work will require (30) calendar days extension of the contract time if accepted by no later than within seven (7) days of this notice.

Please let me know if you have questions.

Sincerely,

Greg Bowles

Greg Bowles
Core Construction Company, Inc.

8375 Baymeadows Way • Jacksonville, Florida 32256 • 904.399.1033 phone • 904.399.1074 fax

ACTIVITY & LOCATION
Police Memorial Building
PCO #24
Replace rusted/damaged studs - RFI #56

NAME & ADDRESS OF CONTRACTOR
Core Construction Company
8375 Baymeadows Way, Jacksonville, FL 32256

DATE: 9/1/2016

TOTAL AREA
Duration 30 days

ITEM NO.	DESCRIPTION	QUANTITIES NO. O	UNIT	LABOR COST UNIT COST	LABOR COST SUBTOTAL	MATERIALS COST UNIT COST	MATERIALS COST SUBTOTAL	SUB CONTRACT	TOTAL
2	**SELECTIVE DEMO**								
	Labor-Skilled	60	hrs	$ 28.00	$ 1,680.00		$ -	$ -	$ 1,680.00
	Labor-Semi-Skilled	60	hrs	$ 22.40	$ 1,344.00		$ -	$ -	$ 1,344.00
	SELECTIVE DEMO - SUBTOTALS				**$ 3,024.00**		**$ -**	**$ -**	**$ 3,024.00**
9	**GYP ASSEMBLY**								
	Re-frame -Skilled	60	hrs	$ 28.00	$ 1,680.00		$ -	$ -	$ 1,680.00
	Re-frame-Semi Skilled	60	hrs	$ 22.40	$ 1,344.00		$ -	$ -	$ 1,344.00
	Re-frame-materials	1	LS	$ -	$ -	$ 1,270.00	$ 1,270.00	$ -	$ 1,270.00
	GYP ASSEMBLY - SUBTOTALS				**$ 3,024.00**		**$ 1,270.00**	**$ -**	**$ 4,294.00**
									$ -

TOTAL	**$ 7,318.00**

CORE
CONSTRUCTION
COMPANY

August 22, 2016 – REVISED PCO#17

Mr. Steven Hatton
Contract Administration Section
City of Jacksonville
214 N. Hogan Street
Jacksonville, Florida 32202

Subject: Police Memorial Building; City Contract No. 8565-09
PCO #17-Additional Chase Walls due to new sewer layout-East Phase 1

Dear Mr. Hatton,

Pursuant to RFI #42; for the scope of work to add chase walls to conceal the new sewer layout; per the plans provided by VRL, Supplemental Drawing 1025-SP-A-03 & 1025-SP-A-04; including wall systems, patching as required, and painting in East Phase 1 stair way corridors; please review the following cost breakouts:

Self-perform:
Labor, materials, & equipment----------$ 1,261.39
Contractor's overhead & profit ----------$ 189.21

Subtotal: ----------$ 1,450.60

Total Proposed Change Order #17----------$ 1,450.60

This change order work will require (6) calendar days extension of the contract time if accepted by no later than within seven (7) days of this notice.

Please let me know if you have questions.

Sincerely,

Greg Bowles

Greg Bowles
Core Construction Company, Inc.

8375 Baymeadows Way • Jacksonville, Florida 32256 • 904.399.1033 phone • 904.399.1074 fax

ACTIVITY & LOCATION
Police Memorial Building
PCO 17
Additional chase walls & access panels - due to new sewer layout
East Phase 1

NAME & ADDRESS OF CONTRACTOR
Core Construction Company
8375 Baymeadows Way, Jacksonville, FL 32256

DATE: 8/22/2016

TOTAL AREA
Duration 6 days

ITEM NO.	DESCRIPTION	QUANTITIES NO. O	UNIT	LABOR COST UNIT COST	LABOR COST SUBTOTAL	MATERIALS COST UNIT COST	MATERIALS COST SUBTOTAL	SUB CONTRACT	TOTAL
2	**SELECTIVE DEMO**								
	Labor-Skilled	2	hrs	$ 28.00	$ 56.00		$ -	$ -	$ 56.00
	Labor-Semi-Skilled	2	hrs	$ 22.40	$ 44.80		$ -	$ -	$ 44.80
	Temporary Dust Partitions	1	LS		$ -	$ 64.48	$ 64.48	$ -	$ 64.48
	SELECTIVE DEMO - SUBTOTALS				**$ 100.80**		**$ 64.48**	**$ -**	**$ 165.28**
9	**GYP ASSEMBLY**								
	Gyp Asmbly-Skilled	8	hrs	$ 28.00	$ 224.00		$ -	$ -	$ 224.00
	Gyp Asmbly-Semi Skilled	8	hrs	$ 22.40	$ 179.20		$ -	$ -	$ 179.20
	Gyp Asmbly- wall board	4	ea	$ -	$ -	$ 14.16	$ 56.64	$ -	$ 56.64
	Gyp Asmbly- metal framing/stud & track	12	ea	$ -	$ -	$ 6.78	$ 81.36	$ -	$ 81.36
	Gyp Asmbly- misc sundries-mud & screws	1	LS	$ -	$ -	$ 30.00	$ 30.00	$ -	$ 30.00
	Gyp Asmbly- fire-3M wrap strips	2	ea	$ -	$ -	$ 123.61	$ 247.22	$ -	$ 247.22
	Gyp Asmbly- fire-3M collars	8	ea	$ -	$ -	$ 16.26	$ 130.08	$ -	$ 130.08
	GYP ASSEMBLY - SUBTOTALS				**$ 403.20**		**$ 545.30**	**$ -**	**$ 948.50**
9	**PAINTING**								
	Paint-ext walls-Skilled	3	hrs	$ 28.00	$ 84.00		$ -	$ -	$ 84.00
	Paint-ext walls	1	LS	$ -	$ -	$ 63.61	$ 63.61	$ -	$ 63.61
	PAINTING -SUBTOTALS				**$ 84.00**		**$ 63.61**	**$ -**	**$ 147.61**
									$ -

TOTAL	**$ 1,261.39**

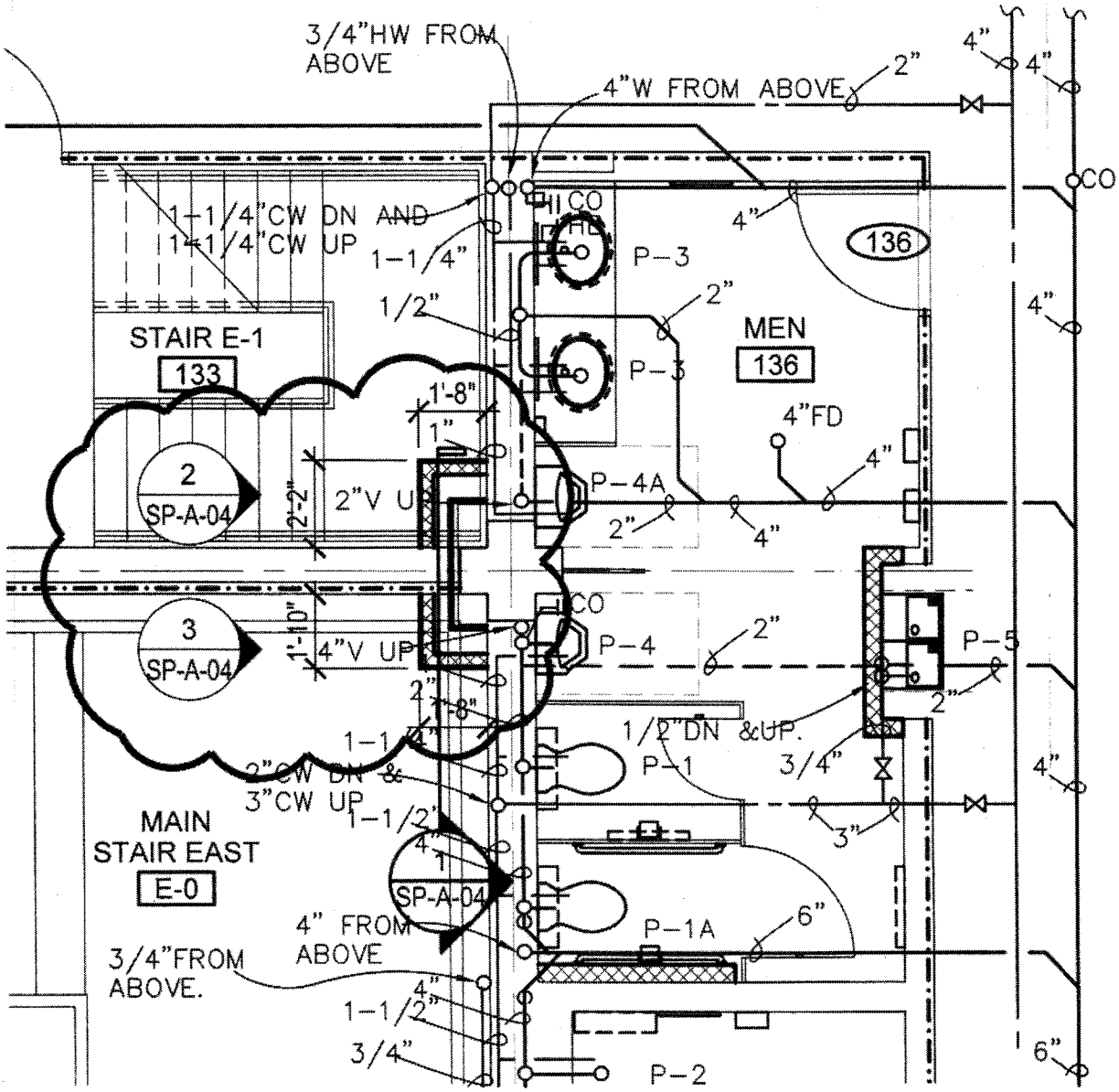

1 / SP-A-03

PARTIAL FLOOR PLAN - LEVEL 1 EAST

SCALE 1/4" = 1'-0"

PROJECT NAME AND LOCATION: POLICE MEMORIAL BUILDING RESTROOM ACCESSIBILITY 500 EAST ADAMS STREET JACKSONVILLE, FLORIDA 32202	REFERENCED DWG NO: 1025-A401 CONTRACT NO: CITY CONTRACT NUMBER : 8565-09	ORIGINATED BY: RF DATE: 30 JUNE 2016 SUPPLEMENTAL DRAWING NO: 1025-SP-A-03
SHEET TITLE: MAIN STAIR EAST E-0, STAIR E-1 #133 - LEVEL 1 EAST		SHEET 1 OF 2 SHEETS
VRL ARCHITECTS, INC. JACKSONVILLE FLORIDA LICENSE # AA C001735	VRL PROJECT NO: 1025	

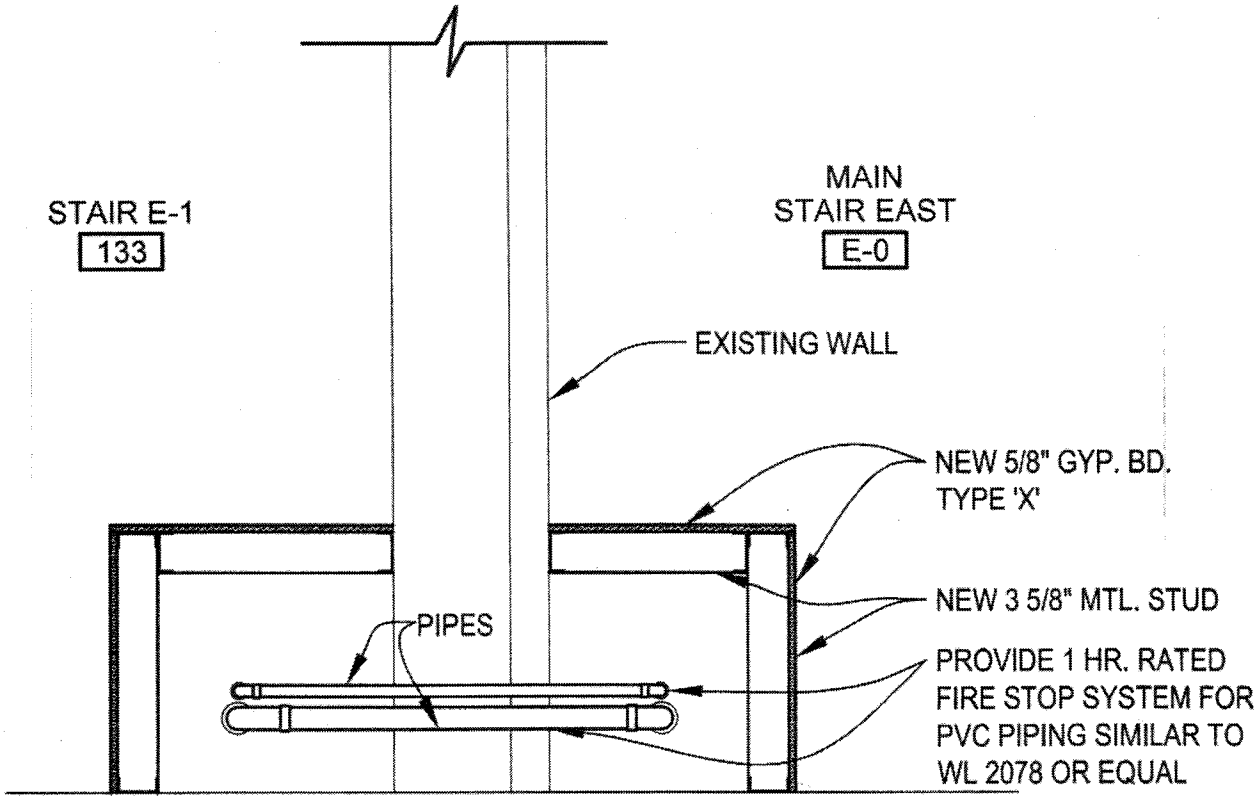

1 / SP-A-04 **SECTION**
SCALE 3/4" = 1'-0"

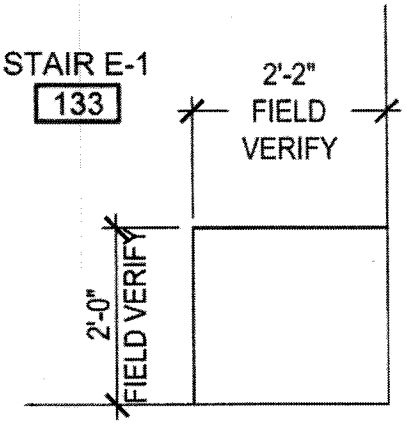

2 / SP-A-04 **ELEVATION**
SCALE 1/2" = 1'-0"

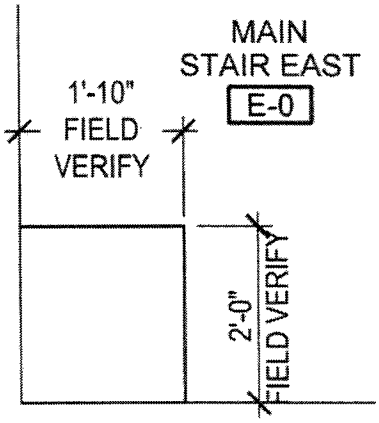

3 / SP-A-04 **ELEVATION**
SCALE 1/2" = 1'-0"

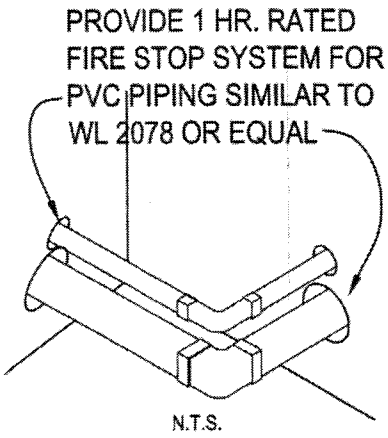

PROJECT NAME AND LOCATION: POLICE MEMORIAL BUILDING RESTROOM ACCESSIBILITY 500 EAST ADAMS STREET JACKSONVILLE, FLORIDA 32202	REFERENCED DWG NO: 1025-SP-A-03 CONTRACT NO: CITY CONTRACT NUMBER : 8565-09	ORIGINATED BY: RF DATE: 6 JULY 2016 SUPPLEMENTAL DRAWING NO: 1025-SP-A-04
SHEET TITLE: MAIN STAIR EAST E-0, STAIR E-1 #133 - LEVEL 1 EAST		SHEET 2 OF 2 SHEETS
VRL ARCHITECTS, INC. JACKSONVILLE FLORIDA LICENSE # AA C001735	VRL PROJECT NO: 1025	

UL SYSTEM NO. W-L-2078

PLASTIC PIPE THROUGH GYPSUM WALL ASSEMBLY

F-RATING = 1-HR. OR 2-HR.
T-RATING = 0-HR., 1-HR. OR 2-HR.
L-RATING AT AMBIENT = 3 CFM/SQ. FT.
L-RATING AT 400° F = LESS THAN 1 CFM/SQ. FT.

WL2078n.121505

FRONT VIEW

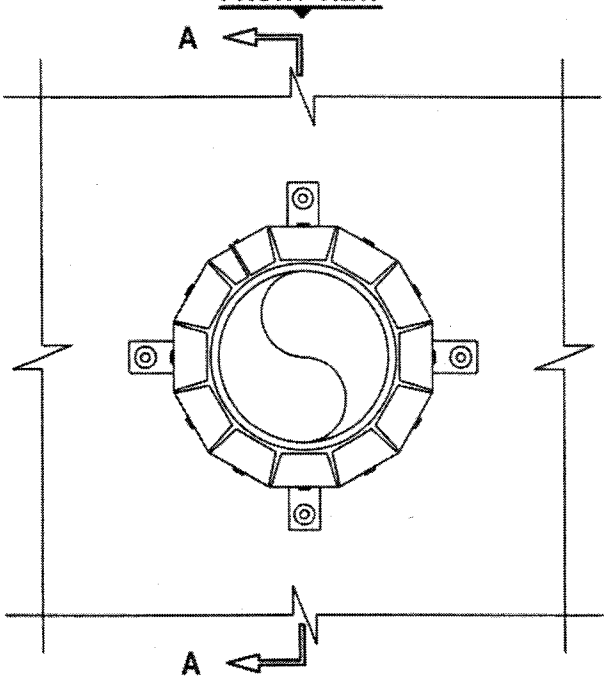

SECTION A-A

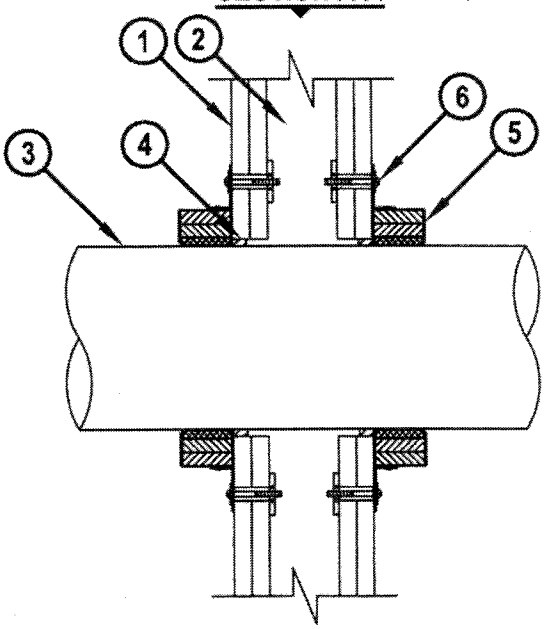

HILTI® FIRESTOP SYSTEMS	HILTI, Inc. Tulsa, Oklahoma USA (918) 252-6000	Sheet 1 of 2 Scale 5/32" = 1" Date Dec. 25, 2005	Drawing No. WL 2078n

Saving Lives through Innovation and Education

CORE
CONSTRUCTION
COMPANY

November 9, 2016

Mr. Steven Hatton
Contract Administration Section
City of Jacksonville
214 N. Hogan Street
Jacksonville, Florida 32202

Subject: Police Memorial Building; City Contract No. 8565-09
PCO # 26– Removal & Replacement of Men's Shower Floor mortar bed
Remove wood furring and replace with metal

Dear Mr. Hatton,

Pursuant to RFI #55 and per the details provided by VRL; for the additional scope of work to remove the existing mortar bed, down to the slab/deck; replace the same with General Polymers TPM #79 Mortar; and upgrade the epoxy flooring to General Polymers #3555. Also in East Phase 2 Room 3109A, Pursuant to RFI #60; enclosed is the scope of work to remove the existing wood furring and replace with 7/8" high-hat metal furring; please review the following cost breakouts:

Subcontractor:
Labor, Material & Equipment for removal (Sub's quote attached)----- $4,220.00
Labor and material for mortar & upgrade (Sub's quote attached)-------$3,395.00
Labor, materials, & equipment----------$2,214.00
Contractor's overhead & profit (subcontractors)----------$ 982.00

Subtotal: ----------$10,812.00

Total Proposed Change Order #26----------$ 10,812.00

This change order work will require fourteen (14) calendar days extension of the contract time if accepted by no later than within seven (7) days of this notice.

Please let me know if you have questions.

Sincerely,

Stephen Roman

Stephen Roman
Core Construction Company, Inc.

8375 Baymeadows Way • Jacksonville, Florida 32256 • 904.399.1033 phone • 904.399.1074 fax

Horizon Surface Systems
CBC 058989

P.O. Box 2046
310 Scarlet Blvd.
Oldsmar, Florida 34677-3018
Ph.: 813-854-3231 Fax: 813-855-2349
www.horizonsurfacesystems.com

Change Order Request

Date: 8/29/2016

G.C. Core Construction

Phone: 904-813-3236

Email: gbowles@core-constructionco.com
Fax:

ATT: Greg Bowles

Project: Police Memorial Building

Scope: To install General Polymers TPM #79 Mortar to slope to drains, and upgrade from original Spec General Polymers #400 system. to General Polymers #3555 system.

Install G.P. TPM #79 Mortar for sloping 218 s/f	$2,575.00
To upgrade from #400 to #3555 218s/f	$520.00
Subtotal $	3,095.00
TOTAL CO AMOUNT$	3,095.00

COPY TO: Carole HSS

SIGNED: Ed Carnegie Ed Carnegie

Horizon Surface Systems
CBC 058989

P.O. Box 2046
310 Scarlet Blvd.
Oldsmar, Florida 34677-3018
Ph.: 813-854-3231 Fax: 813-855-2349
www.horizonsurfacesystems.com

Change Order Request

Date: 8/29/2016

G.C. Core Construction

Phone: 904-813-3236

Email: gbowles@core-constructionco.com
Fax:

ATT: Greg Bowles

Project: Police Memorial Building

Scope: Additional material needed to complete shower floor due to unforeseen conditions incurred during demolition.

Additional G.P. TPM #79 Mortar for sloping	$300.00	
Subtotal	$	300.00
TOTAL CO AMOUNT	$	**300.00**

COPY TO: Carole HSS	**SIGNED:** Ed Carnegie

M
[

MMLM D/B/A

Big T

Concrete Cutting

Slab, Ty-beams, Walls, Core Drilling, Breaking & hauling
(On time, on the line & on the money)

Proposal
Date: 9/1/16

To: Core Construction
Address;
501 E Bay St
Jacksonville Fl

We appreciate the opportunity to quote on your project.
Our cost includes mobilization, labor to complete concrete, equipment work, etc.

Brief description of work: Cut and remove concrete as described in the below scope of work. Price is based on job being done during **Normal Hours** Big T will provide a **basic** clean up daily and after project is complete.

Scope of Work Cutting Based on 1Mob

1.) Set up equipment at loading docks then to 3rd floor
2.) Electric saw using water (1) 15' x 15' square as follows: cut through 3 layers of tile and light weight mortar. Cut floor into 2' x 2' squares for removal
3.) Vac slurry and dispose into dumpster.
4.) Using jack hammers and chipping hammers demo squares into manageable pieces. Break down to existing slab approx 5"inches down.
5.) Remove all squares
6.) Load concrete on carts and take down elevator to dumpster provided by Contractor.
7.) Note the surface will not be perfectly flat when job is complete which should not be an issue since you are pouring back over slab.

Our approximant total cost estimate for the above mentioned work is $4,220.00 Initials_____
To be paid within 15 days of Completion

Clarifications:
1.) Unless otherwise stated this bid is good for 30 days.
2.) Big T requires to be paid for our services **Paid within two weeks by check.** Any time after that date will accrue 2.5 % on the balance. If it becomes necessary to effect collections your company will pay reasonable attorney fees and court cost. The venue is Duval County Jacksonville Fla. Sawing and drilling is not subject to retain age.
3.) Permits, engineering, fees, or drawing are by others.
4.) In order for us to schedule this project please sign and fax back the quote to our office as soon as possible.
5.) Any work not mentioned in this proposal will constitute in a written change order to be signed before work is done.

Again, thank you for the opportunity to quote. If you have any questions, please do not hesitate to contact me at my office.

Total price that is also listed on first page: **Four Thousand Two Hundred And Twenty Dollars**
Sincerely,

Brandon Ford
Michelle Ford

Accepted by:_____-____Date_____
Core Construction

Print name_____Title_____P.O. #_____
Core Construction

ACTIVITY & LOCATION
Police Memorial Building
PCO 27 - Remove wood strips and replace with metal
Required by COJ Building Department
Men's shower room 3109A

NAME & ADDRESS OF CONTRACTOR
Core Construction Company
8375 Baymeadows Way, Jacksonville, FL 32256

DATE: 10/26/2016

TOTAL AREA
Duration 6 days

ITEM NO.	DESCRIPTION	QUANTITIES NO. OF	UNIT	LABOR COST UNIT COST	LABOR COST SUBTOTAL	MATERIALS COST UNIT COST	MATERIALS COST SUBTOTAL	SUB CONTRACT	TOTAL
2	**Demolition**								
	Skilled labor to remove wood	8	hrs	$ 34.00	$ 272.00		$ -	$ -	$ 272.00
	Semi Skilled labor to remove wood	8	hrs	$ 25.00	$ 200.00		$ -	$ -	$ 200.00
				$ -	$ -		$ -	$ -	$ -
	DEMOLITION - SUBTOTALS				**$ 472.00**		**$ -**	**$ -**	**$ 472.00**
5	**Metal Framing**								
	Skilled labor to Install steel high-hat furring	24	hrs	$ 34.00	$ 816.00		$ -	$ -	$ 816.00
	Semi Skilled labor to Install steel high-hat furring	24	hrs	$ 25.00	$ 600.00		$ -	$ -	$ 600.00
	7/8" x 12' Galvanized steel high-hat furring	55	ea.		$ -	$ 5.64	$ 310.20	$ -	$ 310.20
	5 lbs. #7 7/16" screws	1	ea.		$ -	$ 16.04	$ 16.04	$ -	$ 16.04
	METAL FRAMING -SUBTOTALS				**$ 1,416.00**		**$ 326.24**	**$ -**	**$ 1,742.24**
									$ -

TOTAL	**$ 2,214.24**

West, Lori

From: Hatton, Steven
Sent: Wednesday, November 23, 2016 12:27 PM
To: West, Lori
Subject: PMB CO#3
Attachments: CO#3 Justification.xls; PCO #17 w-backup 8-23-2016 (2).pdf; PCO #20.pdf; PCO 21 .pdf; PMB-PCO #19.pdf; PCO #22 w-backup 8-23-2016 (2).pdf; PCO #23 w-backup 8-23-2016 (2).pdf; PMB - PCO #24.pdf; PMB-PCO#26 combined.pdf

Follow Up Flag: Follow up
Flag Status: Flagged

Lori,

#1 back up is PCO#21 and 23
#2 back up is PCO#19, 20, 22, and 25
#3 back up is PCO#24
#4 back up is PCO#17
#5 back up is PCO#26

Thanks

Steven W. Hatton, City Of Jacksonville
Construction Project Manager, COJ Public Works
Office: (904)255-8746
Cell: (904)300-8291
Email: SHatton@coj.net

SUBJECT: **PMB-"RESTROOM ACCESSIBLITY AND PLUMBING UPGRADES ADA"-(REBID)**

BID# CP-0089-15 OPEN DATE: **2015-03-18**

GENERAL GOVERNMENT AWARDS COMMITTEE

KIND AND BASIS OF CONTRACT:
CONSTRUCTION PARTICIPATION

AGENCY: **PUBLIC WORKS**

BASIS OF AWARD: **TOTAL LUMP SUM BASE BID, TO THE LOWEST RESPONSIVE, RESPONSIBLE BIDDER**

NUMBER OF BIDS INVITED 5 NUMBER RECEIVED 2 OTHER 0

SUMMARY OF BIDS AND RECOMMENDED ACTIONS:

Subject bid was awarded on 03/26/15 to Core Construction Company of Jacksonville, Inc., d/b/a Core Construction Co., (contract #8565-09) in the amount of $509,000.00; Change Order #1 was awarded on 04/28/16 in the amount of $52,622.57.

Recommend approval of Change Order #2 to Core Construction Company of Jacksonville, Inc., d/b/a Core Construction Co., in the amount of $88,767.29. Total revised maximum indebtedness not-to-exceed $650,389.86.

This award to be funded by account: PWCP32EPB519-069505-PW0755-01 to be executed by contract change order #2 through Office of General Counsel.

Attachments: Recommendation Memo, Change Order, Previous Award(s)

BUYER: Marilyn Laidler RESPECTFULLY SUBMITTED: _____
MARILYN LAIDLER
GREGORY PEASE, CHIEF
PROCUREMENT DIVISION

CONCURRENCE BY: **Tom Fallin, P.E., Chief, Engineering and Construction Management Division**

(ALL AWARD ACTIONS SUBJECT TO LAWFULLY APPROPRIATED FUNDS)

ACTION OF GGAC COMMITTEE ON RECOMMENDATIONS ABOVE

MEMBERS APPROVING 3 MEMBERS DISAPPROVING _____ DATE: 6-16-16

Jerusa R. Eiber _____ OTHER: _____

_____ _____

James R McCall _____

ACTION OF AWARDING AUTHORITY DATE: 6/16/16

APPROVED ✓ DISAPPROVED _____

OTHER _____

SIGNATURE OF AUTHENTICATION Sam E. Mousa

Sam E. Mousa
Chief Administrative Officer
For: Mayor Lenny Curry
Under Authority of:
Executive Order No. 2015-05

FORM GB-108, Revised 12/2007

SUBJECT: **PMB-"RESTROOM ACCESSIBLITY AND PLUMBING UPGRADES ADA"-(REBID)**

BID# CP-0089-15 OPEN DATE: **2015-03-18**

GENERAL GOVERNMENT AWARDS COMMITTEE

KIND AND BASIS OF CONTRACT:
CONSTRUCTION PARTICIPATION

AGENCY: **PUBLIC WORKS**

BASIS OF AWARD: **TOTAL LUMP SUM BASE BID, TO THE LOWEST RESPONSIVE, RESPONSIBLE BIDDER**

NUMBER OF BIDS INVITED **5** NUMBER RECEIVED **2** OTHER **0**

SUMMARY OF BIDS AND RECOMMENDED ACTIONS:

Subject bid was awarded on 03/26/15 to Core Construction Company of Jacksonville, Inc., d/b/a Core Construction Co., (contract #8565-09) in the amount of $509,000.00.

Recommend approval of Change Order #1 to Core Construction Company of Jacksonville, Inc., d/b/a Core Construction Co., in the amount of $52,622.57. Total revised maximum indebtedness not-to-exceed $561,622.57.

This award to be funded by account: PWCP32CPB519-069505-PW0755-01 to be executed by contract change order #1 through Office of General Counsel.

Attachments: Recommendation Memo, Change Order, Previous Award

BUYER: Marilyn Laidler
MARILYN LAIDLER

RESPECTFULLY SUBMITTED: Greg Pease
GREGORY PEASE, CHIEF
PROCUREMENT DIVISION

CONCURRENCE BY: **Tom Fallin, P.E., Chief, Engineering and Construction Management Division**

(ALL AWARD ACTIONS SUBJECT TO LAWFULLY APPROPRIATED FUNDS)

ACTION OF GGAC COMMITTEE ON RECOMMENDATIONS ABOVE

MEMBERS APPROVING 3 MEMBERS DISAPPROVING _____ DATE: 4/28/16

Teresa R. Eichner _____ OTHER: _____

_____ _____

James R McCall _____

ACTION OF AWARDING AUTHORITY DATE: 4/28/16

MR APPROVED ✓ DISAPPROVED _____

OTHER _____

SIGNATURE OF AUTHENTICATION Sam E. Mousa
Sam E. Mousa
Chief Administrative Officer
For: Mayor Lenny Curry
Under Authority of:
Executive Order No. 2015-05

FORM GB-108, Revised 12/2007

SUBJECT: **PMB-"RESTROOM ACCESSIBLITY AND PLUMBING UPGRADES ADA"-(REBID)**

BID# CP-0089-15 OPEN DATE: **2015-03-18**

GENERAL GOVERNMENT AWARDS COMMITTEE

KIND AND BASIS OF CONTRACT:
CONSTRUCTION PARTICIPATION

AGENCY: **PUBLIC WORKS**

BASIS OF AWARD: **TOTAL LUMP SUM BASE BID, TO THE LOWEST RESPONSIVE, RESPONSIBLE BIDDER**

NUMBER OF BIDS INVITED **5** NUMBER RECEIVED **2** OTHER **0**

SUMMARY OF BIDS AND RECOMMENDED ACTIONS:

Recommend approval of award to Core Construction Company of Jacksonville, Inc. d/b/a Core Construction Co., Inc., as the lowest responsive, responsible bidder in the total lump sum base amount of $509,000.00.

Funding for this award to be encumbered by account(s): PWCP363PB519-06505-PW0078-02- $310,000.00; PWCP32BPB519-069505-PW0078-02- $138,661.85; PWCP32CPB519-069505-PW0755-01- $60,338.15 to be executed by formal contract through Office of General Counsel.

Attachments: Recommendation Memo, Bid Tabulation Sheet, JSEB Letter, Basis of Award, Scope of Work

BUYER: Marilyn Laidler
MARILYN LAIDLER

RESPECTFULLY SUBMITTED: _____
GREGORY PEASE, CHIEF
PROCUREMENT DIVISION

CONCURRENCE BY: **William Joyce, P.E. Chief, Engineering and Construction Management Division**

(ALL AWARD ACTIONS SUBJECT TO LAWFULLY APPROPRIATED FUNDS)
ACTION OF GGAC COMMITTEE ON RECOMMENDATIONS ABOVE

MEMBERS APPROVING 3 MEMBERS DISAPPROVING _____ DATE: 03/26/15

_____ _____ OTHER: _____

_____ _____

_____ _____

ACTION OF AWARDING AUTHORITY DATE: 3/26/15

APPROVED _____ DISAPPROVED _____

OTHER _____

SIGNATURE OF AUTHENTICATION _____

Cleveland Ferguson III
Deputy Chief Administrative Officer
For: Mayor Alvin Brown
Under Authority of:
Executive Order No. 2015-01

FORM GB-108, Revised 12/2007

CP-0089-15	CORE CONSTRUCTION CO.	
3/26/2015	$509,000.00	Award
4/28/2016	$52,622.57	Change Order #1
6/16/2016	$88,767.29	Change Order #2
Pending	$40,741.70	

$691,131.56 Total Award

QWS3270X 12/28/2016 11:54 AM
FAML6350 V5.1 ** NW COJ FAMIS PRODUCTION ** 12/28/2016
LINK TO: ACCOUNT SUMMARY INQUIRY 11:53 AM

FISCAL MO/YEAR : 03 2017 CURRENCY CODE :
INDEX CODE : PWCP32EPB519 PW PUBLIC BLDGS CAPITAL PROJECTS (F5190)
SUBOBJECT : 069505 DM-OTHER CONSTRUCTION COSTS
PROJECT : PW0755 ADA COMPLIANCE
PROJECT DETAIL : 01 ADA COMPLIANCE-PUBLIC BUILDINGS
GRANT :
GRANT DETAIL :
USER CODE :

S	DEC 2016	ANNUAL BALANCE	ALL YEARS BALANCE
ESTIMATED REVENUES	.00	.00	.00
REVENUES	.00	.00	.00
UNREALIZED REVENUES	.00	.00	.00
BUDGET	.00	1,000,000.00	3,500,000.00
EXPENDITURES	237,140.47	310,896.11	900,244.46
ENCUMBRANCES	-116,328.97	-174,731.55	934,282.22
PRE-ENCUMBRANCES	.00	.00	.00
REMAINING BALANCE	-120,811.50	863,835.44	1,665,473.32

F1-HELP F2-SELECT F4-PRIOR F5-NEXT
F9-LINK F10-PRIOR-MO F11-NEXT-MO
G005 - PRIOR RECORD DISPLAYED