DEPARTMENT OF PUBLIC WORKS

130652

Jacksonville
Where Florida Begins.

1920.15-1
TO Mayor
4/24/15

April 8, 2015

MEMORANDUM

TO: James R. McCain, Jr.
Corporation Secretary/Assistant General Counsel

THROUGH: C. Ronald Belton, Assistant to the Mayor/Chief Financial Officer

FROM: Thomas G. McKnight
Capital Improvement Construction Manager

SUBJECT: Snyder Hall Structural and Exterior Improvements
Contractor: J. L. Tripp Builders
Contract No: 9586-09

Forwarded herewith for execution is Change Order No. 2 for subject project.

Original Contract Amount $319,200.00

Previous Change Order No. 1.....$113,411.73

Change Order No. 2 ..... ($5,296.72)

Total Revised Contract Amount.....$427,315.01

Account Number .....See attached

This office recommends the Change Order be approved by your office, the Office of General Counsel, and Mayor Brown, in accordance with Executive Order No. 13-05.

Attachments: 1. Change Order
2. Back-up Information
3. Legal Request Memorandum

TGM:lw

04/15/15 13:51:35
Procurement Division

CHANGE ORDER TRACKING SHEET

Description of Project	Snyder Hall Structural Exterior Repairs
Change Order Number	2
Contract Number	9586-09

PLEASE KEEP THIS FORM WITH THE ATTACHED CHANGE ORDER

	Action	Date Received	Date Signed	Date Forwarded	Signature	Days
1	Date Initiated	N/A	N/A			
1A						
2	Contractor Execution					
3	Construction Management					
4	Using Agency					
5	JEA (if applicable)					
6	City Engineer		4/6			
7	C/O Review	3/23/15	3/23/15	3/23/15		
8	Director of Public Works	4/7/15	4/17/15	4/17/15		
9	Admin/Finance Clerk					
10	Buyer			4/15		
11	Chief of Procurement	4/16	4/17	4/17		
12	Director Finance					
13	Asst. General Counsel					
14	CAO/Mayor					
15	Asst. General Counsel					
	Total Processing Days:					

Attention Change Order reviewers and signatories:

Please assist in expediting this change order by reviewing, signing, and forwarding immediately to the next step. Thank you in advance for your efforts to reduce contract change order processing times.

James M. Robinson, P.E.
Director of Public Works

CITY OF JACKSONVILLE
DEPARTMENT OF PUBLIC WORKS
ENGINEERING DIVISION
CONSTRUCTION CHANGE ORDER

Change Order No. Two (2) Date March 18, 2015

Description of Project Snyder Hall Structural and Exterior Improvements

Name of Contractor J. L. Tripp Builders

Contractor's Address 2055 Edgewood Avenue W., Jacksonville, Florida 32208

Contract No. 9586-09

Account No. See attached Original Contract $319,200.00

+ Previous Change Order 1 $113,411.73 + Change Order No. 2 ($5,296.72)

*See attached appendix for additional listings.

TOTAL REVISED CONTRACT $427,315.01

Bid Number JCF-~~0087~~-13 C071

Construction Completion Date July 27, 2014
Revised Construction Completion Date May 30, 2015
Contract Expiration Date November 24, 2014
Revised Contract Expiration Date September 27, 2015

In compliance with General Conditions of above-referenced contract, CONTRACTOR and OWNER do both hereby agree that the CONTRACTOR shall make the following changes, additions or deletions to the Work specified in the plans and specifications: See attached. Add 212 non compensable calendar days to construction completion and contract expiration dates.

Justification: See attached.

Accepted for Contractor J. L. Tripp Builders

Signed Judy Tripp Attest [illegible]
Title President Title Vice-President
Date 3/27/15 Date 3/27/15

Signed Construction Management Issuing Authority By [illegible] 3-31-15
Thomas G. McKnight Capital Improvement Construction Manager Date

Signed Public Buildings Using Division By [illegible] 4-2-15
Div Department Head Date

[illegible] 4/6/15
Chief, Engineering & Construction Mgmt Div Date

[illegible] 4-29-15
Assistant Counsel Date

[illegible] 4/7/15
Director of Public Works Date

[illegible] 4/27/15
Mayor Date

[illegible] 4/17/15
Chief of Procurement Date

[illegible] 4-29-15
Corporation Secretary Date

Ronald Belton 4/22/15
Director of Finance Date

9586-09 C/02
PM

Cleveland Ferguson III
Deputy Chief Administrative Officer
For: Mayor Alvin Brown
Under Authority of:
Executive Order No. 2015-01

CITY OF JACKSONVILLE FLORIDA

ATTACHMENT "A"
ACCOUNT NUMBERS
SNYDER HALL STRUCTURAL AND EXTERIOR IMPROVEMENTS

ACCOUNT NO.	PWCP31OPB519-06505-JEE118-03	PWCP32CPB519-06505-PW0677-01	Contract Totals
CT NO.	CTPW13000062-01	CTPW14000055-01	
original contract	$319,200.00	$0.00	$319,200.00
change order #1	$44,785.81	$68,625.92	$113,411.73
change order #2	($5,296.72)	$0.00	($5,296.72)
Account Totals	$358,689.09	$68,625.92	$427,315.01

JL TRIPP BUILDERS
SNYDER HALL BUILDING
CONTRACT 9586-09

CHANGE ORDER NO. 1
3/18/2015

NBR	MASTER ITEM DESCRIPTION	QUANTITY	UOM	UNIT COST	NET ADDITION	NET DELETION	NET TOTAL
	UNFORESEEN CONDITION						
1	ROUTE AND SEAL CRACKS ON SOUTH WALL. REMOVE STUCCO FROM AND CLEAN STEEL BEAM. PAINT & REPLACE STUCCO. ADD STAINLESS STEEL RODS TO TIE WALLS TOGETHER.	1.00	LS	$10,263.75	$10,263.75		
	JUSTIFICATION: Engineer recommended repairs to prevent moisture intrusion into the structure and damage new repairs. Stucco repairs will prevent detoriation of steel beam.						
2	REPAIR 6 INSIDE PIERS TO SOUTHSIDE WALL	1.00	LS	$4,184.53	$4,184.53		
	JUSTIFICATION: Engieer recommended repairs.						
3	REMOVE AND REINSTALL TEMPORARY FENCE FOR ONE SPARK FESTIVAL.	1	LS	$ 632.50	$632.50		
	JUSTIFICATION: Coordinator with One Spark Festival organizers resulted in the decision to have the sidewalk outside of Snyder be clear of any obstructions for their event, thus the removal of the temporary construction fence.						
4	INSTALL 4 HOUR FIRE RATED CMU WALL AT WEST SIDE OF BUILDING (ALLEYWAY)	1.00	LS	$27,290.00	$27,290.00		
	JUSTIFICATION: The decision was made to construct the improvements from the interior of the buildng once construction commenced. It was determined that the interior wall was in a degraded condition and unsafe and required modifications to the original plan to address these revealed conditions.						
5	CREDIT TO CHANGE FROM A PILE & BEAM SYSTEM AS PREVIOUSLY SPECIFIED TO AN ATLAS PUSH PILE SYSTEM.	-1.00	LS	$47,667.50		($47,667.50)	
	JUSTIFICATION: Snyder Hall is a historical building with no as-builts available. Initially, it was anticipated that there was a step footer; however, once it was exposed, it was continuous, which required a different approach for the beam system.						
	TOTAL UNFORSEEN CONDITIONS:				**$42,370.78**	**($47,667.50)**	
	SUBTOTAL CHANGE ORDER NO. 1				**$42,370.78**	**($47,667.50)**	
	NET TOTAL CHANGE ORDER NO. 1				**($5,296.72)**		

CONTRACT CHANGE ORDER

From: J L Tripp Builders
5133 Soutel Drive
Jacksonville, FL 32208
(904) 613-5097

Change order No: 4
Date: 2/12/15
Job Name: Snyder Hall
Contract Job No.: 9586-09/JCF-0071-13
Prepared by: Judi Tripp

To: City of Jacksonville
Attn: Torrance Cox
214 N Hogan St, 10th Floor
Jacksonville, FL 32202

The work covered by this order shall be performed under the same terms and conditions as that included in the original.

This change order is for labor and material for the following:

1.) Additional Work to southside of building:
Per letter dated 12/23/14 provided by Atlantic Engineering Services
-To route and seal cracks on South wall to prevent moisture intrusion into the structure and damage to the new repairs.
-To remove stucco from steel beam that spans over the niche of building, clean the beam, paint and replace stucco to prevent deterioration of the steel beam.
-At south-east entry, drill 3/4" diameter stainless steel by 2'0" long rods and epoxy anchored at the wall intersection to tie the two walls together up to 6 rods to be installed.

-Additional Labor costs-60hrs @ $135/hr-**$8,100.00**
-Foreman @ $50/hr, 1 carpenters @ $25/hr, 3 laborers @ $20/hr
-Additional Material costs needed (grinding blades, elastomeric joint sealant, sand)- **$750.00**
--Pick up and delivery of materials-**$75.00**

Total Cost-$8,925.00 plus 15%=$10,263.75

2.) Inside Pier repair to Southside wall:
Per drawing provided by Atlantic Engineering Services dated 1/27/15 worksheet # S201, sketch# SK-15
-To provide labor and material to repair six (6) piers as per drawings.
-Additional Labor costs-16hrs @ $132/hr-**$2,112.00**
-Foreman @ $50/hr, 1 mason @ $22/hr, 3 laborers @ $20/hr
-Additional Materials Costs (block, sand, mortar, rebar, epoxy, Simpson h2.5A ties, bagged concrete)-**$1526.72**

Total Cost-$3, 638.72 plus 15%=$4,184.53

3.) Fence removal for One Spark-April
-To remove and reinstall fence for One Spark-**$550.00**

Total Cost-$550.00 plus 15%=$632.50

4.) Installation of 4 hour fire rated CMU wall at West side of building (alleyway)
-To provide new wall as per drawing provide by Atlantic Engineering Services, as per sketch dated 1/21/15, worksheet # S-202, sketch number SK-11 and to fill all cells solid as per Kem at VRL Architects
-Demo of exisitng exterior restroom walls down to 12" bearing wall in order to re-lay block
-Additional Labor costs-16 hrs @ $170/hr-**$2,720.00**
-Foreman @ $50/hr, 6 laborers @ $20/hr
-Dump fees-**$500.00**
-Block wall to include footer-**$10,500.00**
-price is to include blocks, sand, mortar, concrete, rebar, epoxy and labor to complete job
-Fill cells-this will be done in five (5) lifts filling all cells solid
-Additional Labor costs-40 hrs @ $170/hr-**$6,800.00**
-Foreman @ $50/hr, 6 laborers @ $20/hr
-Material cost (concrete)-**$2461.00**
-Permitting-**$750.00**

Total Cost-$23,731.00 plus 15%=$27,290.

Grand total-$42,371.43
Written: Forty Two Thousand Three Hundred and Seventy One Dollars and Forty Three Cents.

All of the work is to be completed in a substantial and workmanlike manner.

Changes Approved:

By:	_____	Previous Contract Amount:	$	319,200.00
		Change order # 1	$	8,063.06
By:	_____	Change order # 2	$	20,355.00
		Change order # 3	$	84,993.67
		Change order # 4	$	42,371.43
		Credit Adj	$	47,667.50
By:	J L Tripp Builders/Judi Tripp	Total Contract and Extras:	$	427,315.66

CONTRACT CHANGE ORDER

From: J L Tripp Builders
5133 Soutel Drive
Jacksonville, FL 32208
(904) 613-5097

To: City of Jacksonville
Attn: Torrance Cox
214 N Hogan St, 10th Floor

Change order No: Credit Adjustment

Date:	2/12/2015
Job Name:	Synder Hall Building
Contract Job No.:	9586-09/JCF-0071-13
Prepared by:	Judi Tripp

The work covered by this order shall be performed under the same terms and conditions as that included in the original.

This credit adjustment is for:

1.) **Underpinning and Wall Support**
Changing from a pile and beam system as previously spec'd to an Atlas push pile system.
-Labor Cost credit for installtion of beams onto piles-84 hrs @ $204/hr-$17,136.00
-Material costs for grout, drill bits, W10 hot dipped galvanized beams and fabrication-$10,111.50
-Cutting of holes in walls for W10 beams-$11,850.00
-Engineering and additional piles-$10, 700 plus 10%=$11,770.00-$3,200 (diff in new price of piles)=$8,570.00

Total Credit to City of Jacksonville-$47,667.50
Written-Forty Seven Thousand Six Hundred and Sixty Seven Dollars and Fifty Cents.

Changes Approved:

By: _____

By: _____

By: J L Tripp Builders/Judi Tripp

Previous Contract Amount:	$	319,200.00
Change order # 1	$	8,063.06
Change order # 2	$	20,355.00
Change order # 3	$	84,993.67
Change order # 4	$	42,371.43
Credit Adj	$	47,667.50
Total Contract and Extras:	$	427,315.66

DEPARTMENT OF PUBLICWORKS

Jacksonville
Where Florida Begins.

2/23/2015

Lori West,

Please process this change order for Snyder Hall Church

Re: JCF- 0071-13 – Snyder Hall Building Structural and Exterior Improvements Change Order #4

1. Total change Order Amount ----------Unforeseen----------$ 42,371.43
2. Total Credit Back to the City of Jacksonville ----------$ 47,667.50
3. Contractor: JL Tripp Builder's - all supporting documents are attached.

Thanks!

Torrance A Cox, Sr

AES
ATLANTIC
ENGINEERING
SERVICES

SUBMITTAL REVIEW FORM

6501 Arlington Expy.
Building B, Suite 201
Jacksonville, FL 32211
PH: 904.743.4633
FX: 904.725.9295
jax@aespj.com
www.aespj.com

February 14, 2015

CHECKED BY Jude T. Kostage, P.E.

PROJECT Snyder Hall Structural Improvements
PROJECT # 311-201.01

We have reviewed the attached submittal which includes the following items:

DATE	PAGES	DESCRIPTION
2/13/15	5	Atlas Pile systems

ACTION TAKEN

- ☐ REVIEWED
- ☐ REVISE AND RESUBMIT; SEE REMARKS
- ☐ REJECTED; SEE REMARKS
- ☒ FURNISH AS CORRECTED; SEE REMARKS
- ☐ NOT REVIEWED; SEE REMARKS

This check of the attached submittal is only for review of the general conformance with the design concept and general compliance with the information given in the contract documents. Any action shown is subject to the requirements of the contract documents. Corrections or comments made on the submittal do not relieve the contractor from compliance with the requirements of the contract drawings and specifications. The contractor is responsible for: confirming and correlating all quantities and dimensions; selecting fabrication processes and techniques of construction; coordinating his work with that of all other trades; and performing his work in a safe and satisfactory manner.

REMARKS

1. Use minimum 3-1/2" diameter piles per general notes.

LETTER OF TRANSMITTAL

PROJECT: **Snyder Church Foundation**

CITY CONTRACT NUMBER: **9586-09** **Specification No.** _____
SUBMITTAL DESCRIPTION: Atlas Pile system
FROM: J L Tripp Builders

TO: **Torrance Cox**
Contract Administration Section
214 N. Hogan St., Jacksonville, FL 32202

REMARKS: *see attached*
SIGNATURE: **Judi Tripp** **DATE:** **2/12/15**

FROM: Torrance Cox
Contract Administration Section
214 N. Hogan St., Jacksonville, FL 32202
TO: VRL & AES
SIGNATURE: _____ **DATE:** 2·13·15

FROM:

TO: Torrance Cox
Contract Administration Section
214 N. Hogan St., Jacksonville, FL 32202

This submittal has been reviewed for compliance with the specifications and drawings for the subject project and the following action is recommended:

____**APPROVAL**
____**APPROVAL AS NOTED (see comments below)**
____**DISAPPROVAL (see comments below)**

COMMENTS: _____

SIGNATURE: _____ **DATE:** _____

FROM: Contract Administration Section
214 N. Hogan St., Jacksonville, FL 32202

TO: J L Tripp Builders

This submittal has been reviewed for compliance with the specifications and drawings for the subject project is:

____**APPROVED**
____**APPROVED AS NOTED (see comments below)**
____**DISAPPROVED; CORRECT AND RESUBMIT (see comments below)**

COMMENTS: _____

SIGNATURE: _____ **DATE:** _____

ATLAS RESISTANCE®
STANDARD AND MODIFIED 2-PIECE SYSTEMS

Atlas Resistance® Piers
2-PIECE UNDER FOOTING
PIER SYSTEM

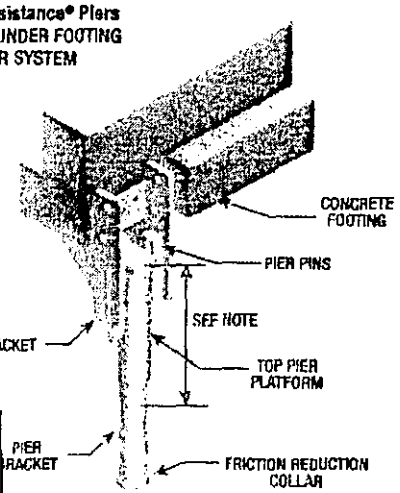

use min 3-1/2" diameter piles per gen. notes

- Use for lifts up to 4".
- All 2-piece pier systems include:
  - Pier bracket .
  - Top pier platform.
  - 14 linear feet of pier pipe (including the starter section).
  - "M" designates one modified sleeve included.
- Order Separately: Two pier pins (two Grade 8 bolts for 4½" pier) and pier shims. Each pier requires a minimum of four anchor bolts. **NOTE:** Anchor bolts not supplied by CHANCE® Civil Construction
- Standard finish is all mill steel (except AP-2-UF-3500[PA] series, which has "Flow Coat" corrosion protection on the pier pipe, standard). Specify finish within brackets [*] when ordering. See **Note 3** at bottom of table for available finishes.

Atlas Resistance® Standard and Modified 2-Piece Pier Designators

Pier Designation NOTE: Specify finish in area marked [*]	Ultimate Capacity[1]	Max Working Capacity[1]	Pier Dia	Catalog Number			
				Plain "P"	Plain w/ F.C. Pipe "PA"	H.D.G. w/ F.C. Pipe "GA"	H.D.G. "G"
AP-2-UF-2875.165[*][14'-0]	60,000#	30,000#	2⅞"	PSA1033	PSA1847	PSA3936	PSA1054
AP-2-UF-2875.165M[*][14'-0]	70,000#	35,000#	2⅞"	PSA4797	PSA4798	PSA4799	PSA4800
AP-2-UF-3500.165[*][14'-0]	85,000#	42,500#	3½"	N/A	PSA1000N	PSA1051N	N/A
AP-2-UF-3500.165[*][14'-0] (1)	85,000#	42,500#	3½"	N/A	PSA1000	PSA1051	N/A
AP-2-UFVL-3500.165[*][14'-0]	86,000#	43,000#	3½"	N/A	PSA1024N	PSA2032N	N/A
AP-2-UF-3500.165[*][14'-0] (1) (4" Dia. Sleeve at top of Pier)	91,000#	45,500#	3½"	N/A	PSA1094	PSA1104	N/A
AP-2-UF-3500.165M[*][14'-0]	91,000#	45,500#	3½"	N/A	PSA1094N	PSA1104N	N/A
AP-2-UFVL-3500.165M [*][14'-0]	91,000#	45,500#	3½"	N/A	PSA2291N	PSA2290N	N/A
AP-2-UF-4000.219[*][14'-0]	98,000#	49,000#	4"	PSA1213N	N/A	N/A	PSA2977
AP-2-UFVL-4000.219[*][14'-0]	110,000#	55,000#	4"	PSA2576N	N/A	N/A	PSA2577N
AP-2-UF-4500.237[*][14'-0]	141,000#	70,500#	4½"	PSA2270	N/A	N/A	PSA2998

Notes:

1. Capacities based upon maximum pipe exposure of 2 feet and soil strength having a minimum Standard Penetration Test (SPT) Blow Count "N" of 4. The capacities are based on a pier depth to fixity of 5'-6.
2. Complies with the structural provisions of the most recent editions of BOCA National Code, ICBO Uniform Code, SBCCI Standard Code and 2000 International Building and Residential Code (2002 Accumulative Supplement). (See Appendix C.)
3. Specify letter for available finishes: P = Entire product supplied mill finish steel. G = Entire product supplied galvanized. PA = Plain steel bracket assy; "Flow Coat" corrosion protection on pier pipe. GA = HDG bracket assy; "Flow Coat" corrosion protection on pier pipe.

(1) Design used in ICC Legacy Report NER-579.

Pg. 2

Atlas Resistance® Piers

Under Footing Bracket Systems

- **For lifts up to 4"**
- **Standard-Series and N-Series models**

Under Footing Bracket Atlas Resistance® Piers have 2⅞" to 4½" diameter pier sections with 0.165" to 0.237" wall thickness. Two-stage hydraulic installation develops end-bearing piers with a verifiable factor of safety. Multiple finishes and brackets are available. For more details, see the Chance Civil Construction Technical Design Manual, Bulletin 01-0605.

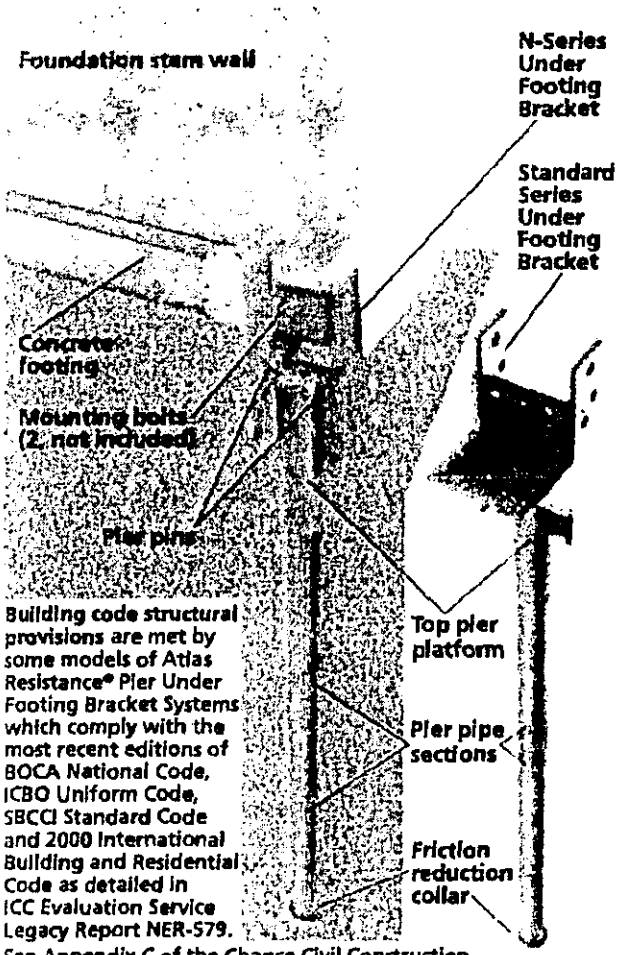

Building code structural provisions are met by some models of Atlas Resistance® Pier Under Footing Bracket Systems which comply with the most recent editions of BOCA National Code, ICBO Uniform Code, SBCCI Standard Code and 2000 International Building and Residential Code as detailed in ICC Evaluation Service Legacy Report NER-579.

See Appendix C of the Chance Civil Construction Technical Design Manual, Bulletin 01-0605.

*Design Capacity	Under Footing Bracket Systems Atlas Resistance® Pier Sizes
0 - 30 kip	2⅞" Pier Diameter
0 - 35 kip	2⅞" Pier Diameter, Modified with reinforcing sleeve
0 - 42.5 kip	3½" Pier Diameter
0 - 45.5 kip	3½" Pier Diameter, Modified with reinforcing sleeve
0 - 49 kip	4" Pier Diameter
0 - 70.5 kip	4½" Pier Diameter

*Based on a Safety Factor of 2 for pier ultimate mechanical strength.

Pg. 3

AP-2-UFB-2875 UNDER FOOTING BRACKET

CATALOG NO: PSA1034 [P] OR PSA1055 [G]

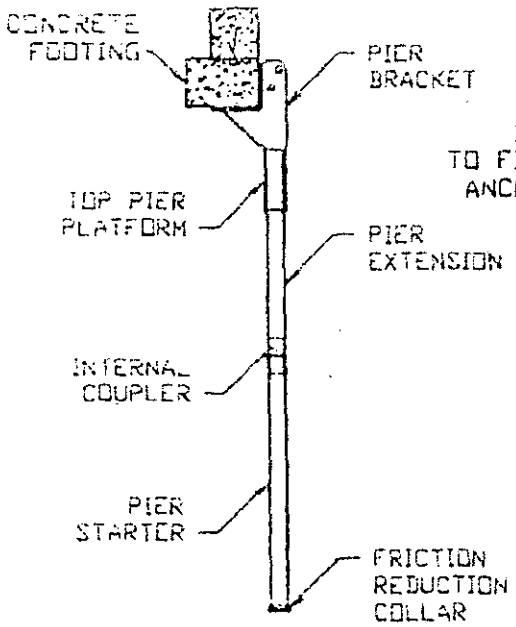

TYPICAL INSTALLATION

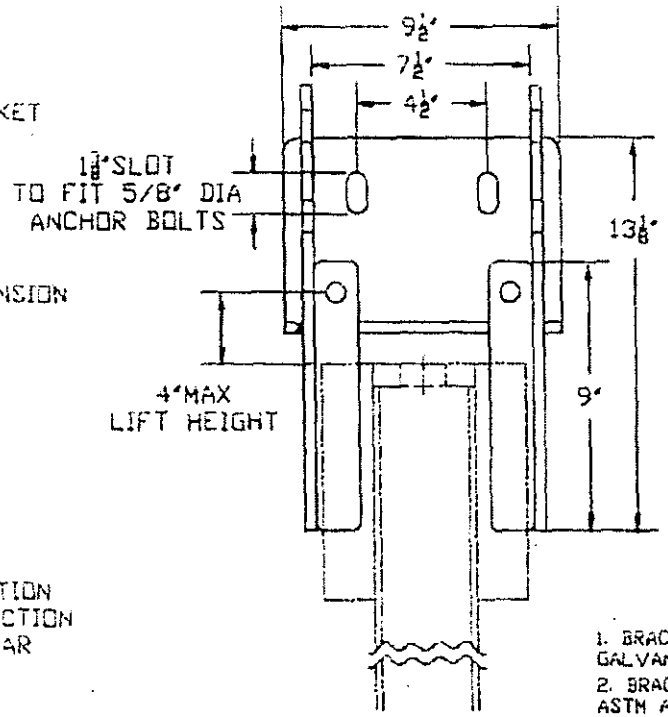

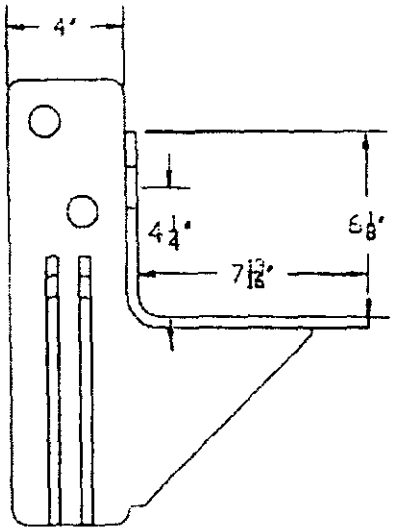

-NOTES-

1. BRACKET FINISH AVAILABLE IN PLAIN [P] OR HOT DIP GALVANIZED [G] PER ASTM A153-(LATEST REVISION).
2. BRACKET MATERIAL ⅜" THICK HOT ROLLED STEEL PER ASTM A572 MIN. YEILD STRENGTH 50 KSI.
3. ALL WELDING TO BE DONE BY WELDERS CERTIFIED UNDER SECTION 5 OF THE AWS CODE D1.1.
4. MANUFACTURER TO HAVE IN EFFECT INDUSTRY RECOGNIZED WRITTEN QUALITY CONTROL FOR ALL MATERIALS AND MANUFACTURING PROCESSES.
5. TWO 5/8 DIA PIER PINS (PART# PSA1030) CONFORMING TO ASTM A29 GRADE 1080 ARE REQUIRED FOR EACH PIER.
6. LIFT SHIMS (PART# PSA1031 OR PSA1032) SHALL BE USED AS REQUIRED UP TO A MAXIMUM HEIGHT OF 4 INCHES.
7. REFER TO DRAWING SA1002 FOR TOP PIER PLATFORMS.
8. REFER TO DRAWING SA1003 FOR PIER SECTIONS.

AP-2-UFB-2875 SYSTEM COMPONENTS

Catalog No	Pier System	Bracket (Qty)	Top Pier Platform (Qty)	Pier Section (Qty)	Starter Section (Qty)	Plain Pier Sleeve (Qty)	Modified Pier Sleeve (Qty)	Working Capacity (Kips)	Ultimate Capacity (Kips)
PSA1035	AP-2-UF-2875.165 [P] [14'-0"]	1	1	3	1	NA	NA	30	60
PSA1047	AP-2-UF-2875.165 [PA] [14'-0"]	1	1	3	1	NA	NA	30	60
PSA3330	AP-2-UF-2875.165 [GA] [14'-0"]	1	1	3	1	NA	NA	30	60
PSA1004	AP-2-UF-2875.165 [G] [14'-0"]	1	1	3	1	NA	NA	30	60
PSA4797	AP-2-UF-2875.165M [P] [14'-0"]	1	1	3	1	0*	1	35	70
PSA4798	AP-2-UF-2875.165M [PA] [14'-0"]	1	1	3	1	0*	1	35	70
PSA4799	AP-2-UF-2875.165M [GA] [14'-0"]	1	1	3	1	0*	1	35	70
PSA4800	AP-2-UF-2875.165M [G] [14'-0"]	1	1	3	1	0*	1	35	70

Notes:

P = Plain Steel, A = Plain Coat Corrosion Protection, G = Hot Dipped Galvanized, M = Modified Pier

* Plain Pier Sleeves are not included in Kit No.: PSA4797, PSA4798, PSA4799 and PSA4800 and are only used if soil conditions warrant

ATLAS

HUBBELL POWER SYSTEMS

AP-2-UFB-2875[*]
BRACKET

A	SA1034	SEE DWG	C
			SHEET 1 OF 1

PIER SECTIONS

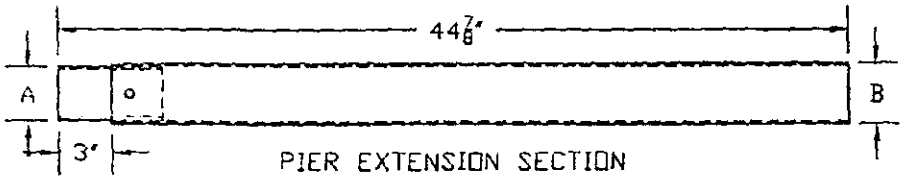

PIER EXTENSION SECTION

PART#	DESCRIPTION	SERIES
PSA1036	AP-EPS-2875.165[P]	AP-2875/2875M
PSA1341	AP-EPS-2875.165[A]	AP-2875/2875M
PSA1057	AP-EPS-2875.165[G]	AP-2875/2875M
PSA1003	AP-EPS-3500.165[A]	AP-3500/3500M
PSA1107	AP-EPS-4000.219[P]	AP-4000
PSA1152	AP-EPS-4000.219[G]	AP-4000
PSA1260	AP-EPS-4500.237[P]	AP-4500
PSA2981	AP-EPS-4500.237[G]	AP-4500

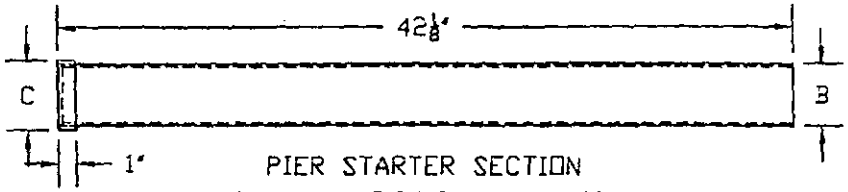

PIER STARTER SECTION

PART#	DESCRIPTION	SERIES
PSA1037	AP-SS-2875.165[P]	AP-2875/2875M
PSA1342	AP-SS-2875.165[A]	AP-2875/2875M
PSA1058	AP-SS-2875.165[G]	AP-2875/2875M
PSA1004	AP-SS-3500.165[A]	AP-3500/3500M
PSA1110	AP-SS-4000.219[P]	AP-4000
PSA1153	AP-SS-4000.219[G]	AP-4000
PSA1261	AP-SS-4500.237[P]	AP-4500
PSA2982	AP-SS-4500.237[G]	AP-4500

PIER SLEEVES

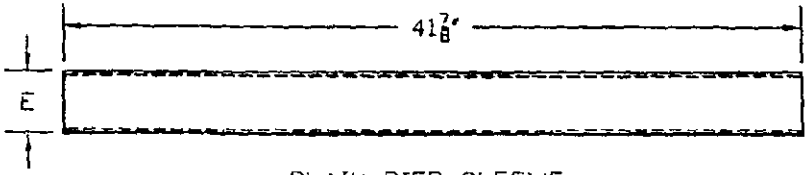

PLAIN PIER SLEEVE

PART#	DESCRIPTION	SERIES
PSA4843	AP-PPS-3500.216[P]	AP-2875M
PSA4844	AP-PPS-3500.216[G]	AP-2875M
PSA1821	AP-PPS-4000.219[P]	AP-3500M
PSA1216	AP-PPS-4000.219[G]	AP-3500M
PSA1353	AP-PPS-4500.237[P]	AP-4000
PSA3592	AP-PPS-4500.237[G]	AP-4000

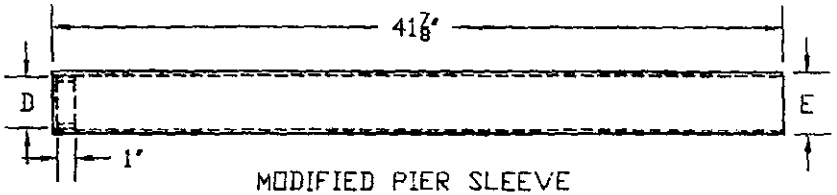

MODIFIED PIER SLEEVE

PART#	DESCRIPTION	SERIES
PSA2700	AP-MPS-3500.216[P]	AP-2875M
PSA4461	AP-MPS-3500.216[G]	AP-2875M
PSA1096	AP-MPS-4000.219[P]	AP-3500M
PSA1106	AP-MPS-4000.219[G]	AP-3500M

-DIMENSION TABLE-

PIER SYSTEM	"A"		"B"		"C"		"D"		"E"	
	OD	WALL	OD	WALL	OD	WALL	OD	WALL	OD	WALL
AP-2875 SERIES	2.50	0.134	2.875	0.165	3.50	0.216	N/A	N/A	N/A	N/A
AP-2875M SERIES	2.50	0.134	2.875	0.165	3.50	0.216	2.875	0.262	3.50	0.216
AP-3500 SERIES	3.125	0.180	3.50	0.165	4.00	0.219	N/A	N/A	N/A	N/A
AP-3500M SERIES	3.125	0.180	3.50	0.165	4.00	0.219	3.50	0.216	4.00	0.219
AP-4000 SERIES	3.50	0.218	4.00	0.219	4.50	0.237	N/A	N/A	4.50	0.237
AP-4500 SERIES	4.00	0.219	4.50	0.237	5.00	0.188	N/A	N/A	N/A	N/A

-NOTES-

1. PIER SECTION MATERIAL FINISH AVAILABLE IN PLAIN [P] OR ALLIED FLOW COATING [A] OR HOT DIP GALVANIZED [G] PER ASTM A153-(LATEST REVISION).
2. PIER SLEEVE MATERIAL FINISH AVAILABLE IN PLAIN [P] OR HOT DIP GALVANIZED [G].
3. PIPE MATERIAL SPECIFICATION PER ASTM A500 GRADE B OR ASTM A513/1 OR A53 GRADE B.
4. ALL WELDING TO BE DONE BY WELDERS CERTIFIED UNDER SECION 5 OF THE AWS CODE D1.1.
5. MANUFACTURER TO HAVE IN EFFECT INDUSTRY RECOGNIZED WRITTEN QUALITY CONTROL FOR ALL MATERIALS AND MANUFACTURING PROCESSES.

ATLAS®

HUBBELL® POWER SYSTEMS

TITLE: PIER SECTIONS

SIZE	DWG NO.	CAT / PART / ASSY NO.	REV
A	SA1003	SEE DWG	–

DO NOT SCALE THIS DRAWING | DRN BY SMS | DATE 3/8/07 | SHEET 1 OF 1

ATLANTIC
ENGINEERING
SERVICES

6501 Arlington Expy.
Building B, Suite 201
Jacksonville, FL 32211
PH: 904.743.4833
FX: 904.725.9295
jax@aespj.com
www.aespj.com

SUBMITTAL REVIEW FOI

February 14, 2015

CHECKED BY Jude T. Kostage, P.E.

PROJECT Snyder Hall Structural Improvements
PROJECT # 311-201.01

We have reviewed the attached submittal which includes the following items:

DATE	PAGES	DESCRIPTION
2/11/15	2	Beam support brackets

ACTION TAKEN

- ☒ REVIEWED
- ☐ REVISE AND RESUBMIT; SEE REMARKS
- ☐ REJECTED; SEE REMARKS
- ☐ FURNISH AS CORRECTED; SEE REMARKS
- ☐ NOT REVIEWED; SEE REMARKS

This check of the attached submittal is only for review of the general conformance with the design concept ar general compliance with the information given in the contract documents. Any action shown is subject to tl requirements of the contract documents. Corrections or comments made on the submittal do not relieve tl contractor from compliance with the requirements of the contract drawings and specifications. The contract is responsible for: confirming and correlating all quantities and dimensions; selecting fabrication processes ar techniques of construction; coordinating his work with that of all other trades; and performing his work in safe and satisfactory manner.

REMARKS

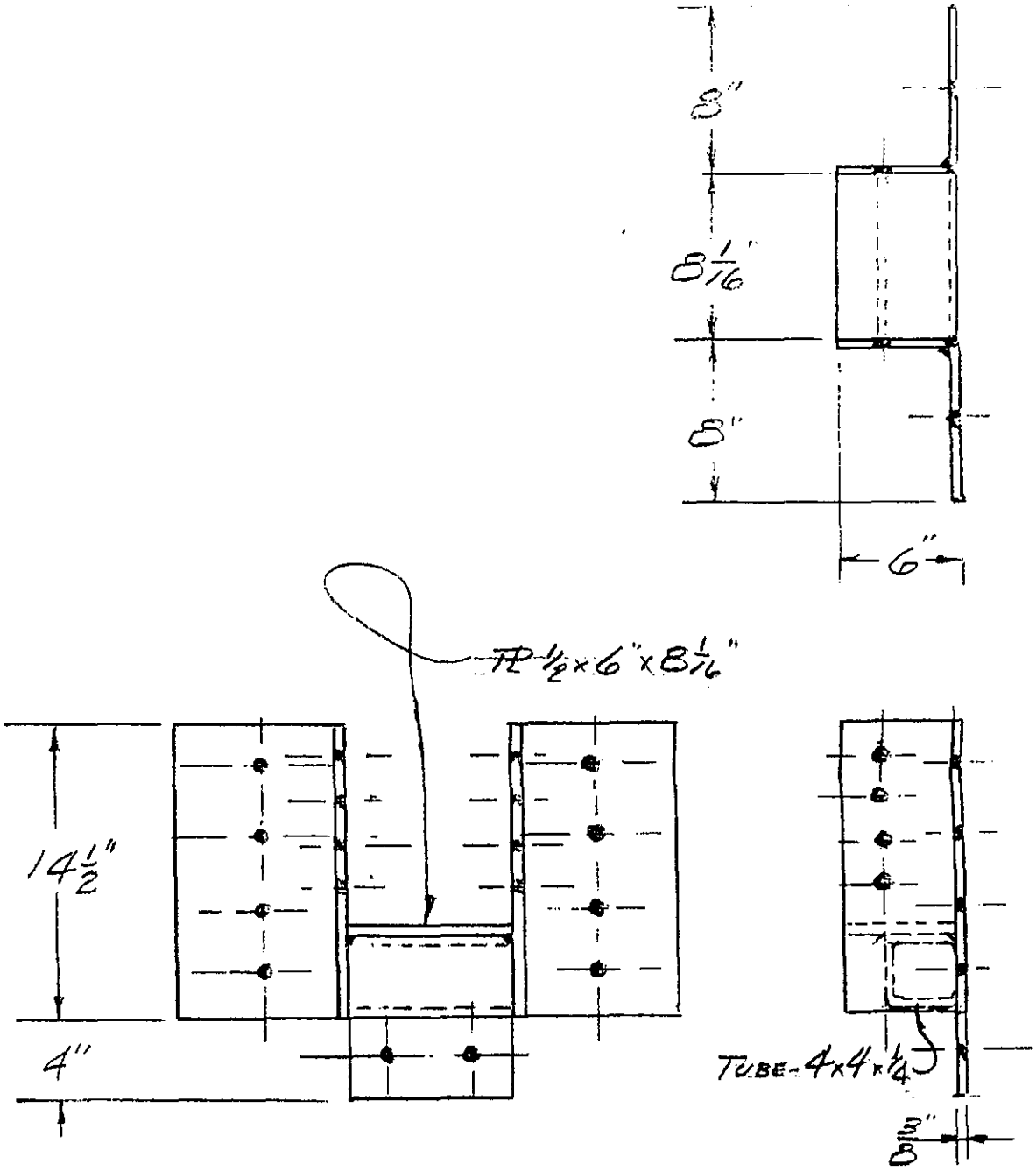

ONE-BEAM SADDLE-152

ALL HOLES 7/8" DIA.

JL TRIPP BUILDERS

FOR- SNYDER HALL
-FLOOR BEAM SADDLES

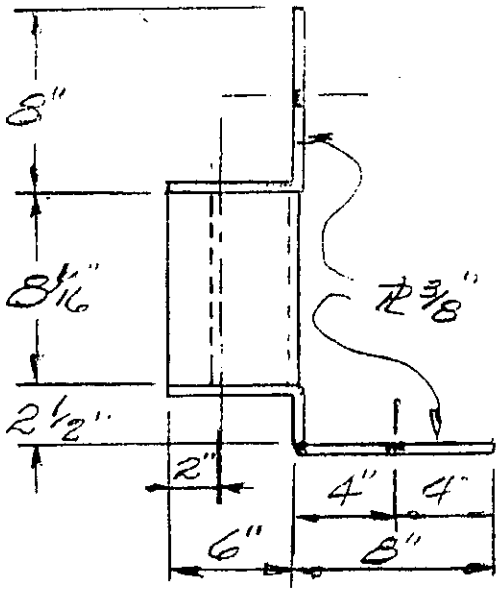

PLAN VIEW

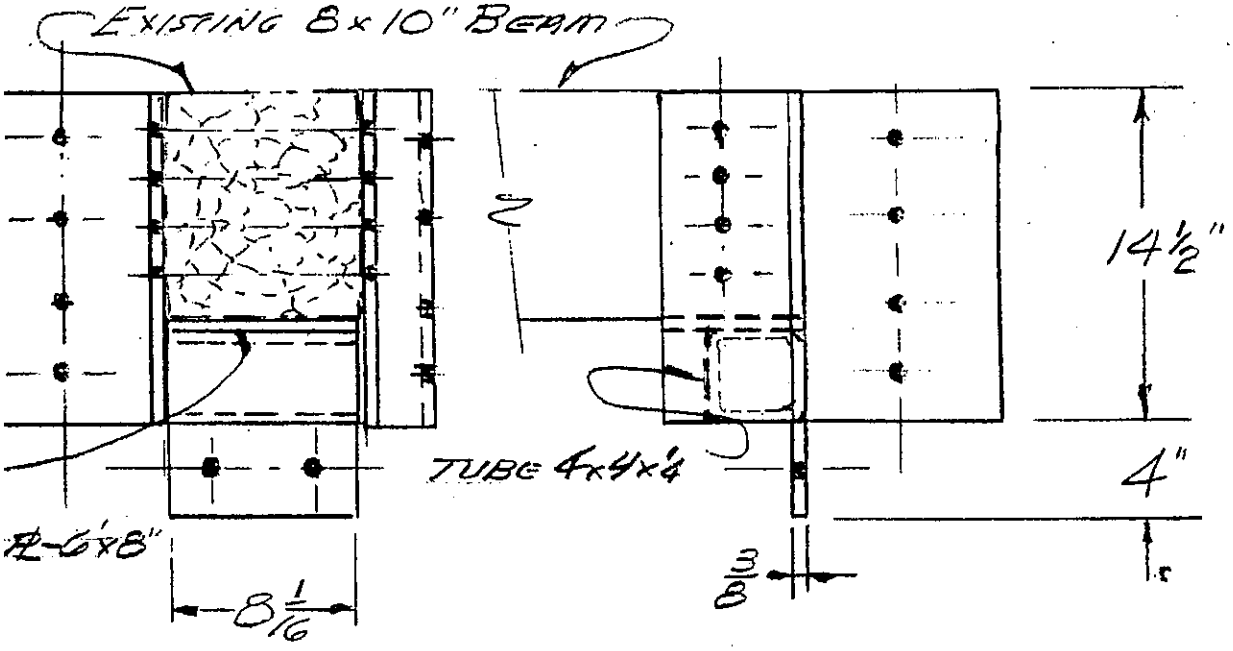

ONE-BEAM SADDLE - 151

ALL HOLES - 7/8" DIA

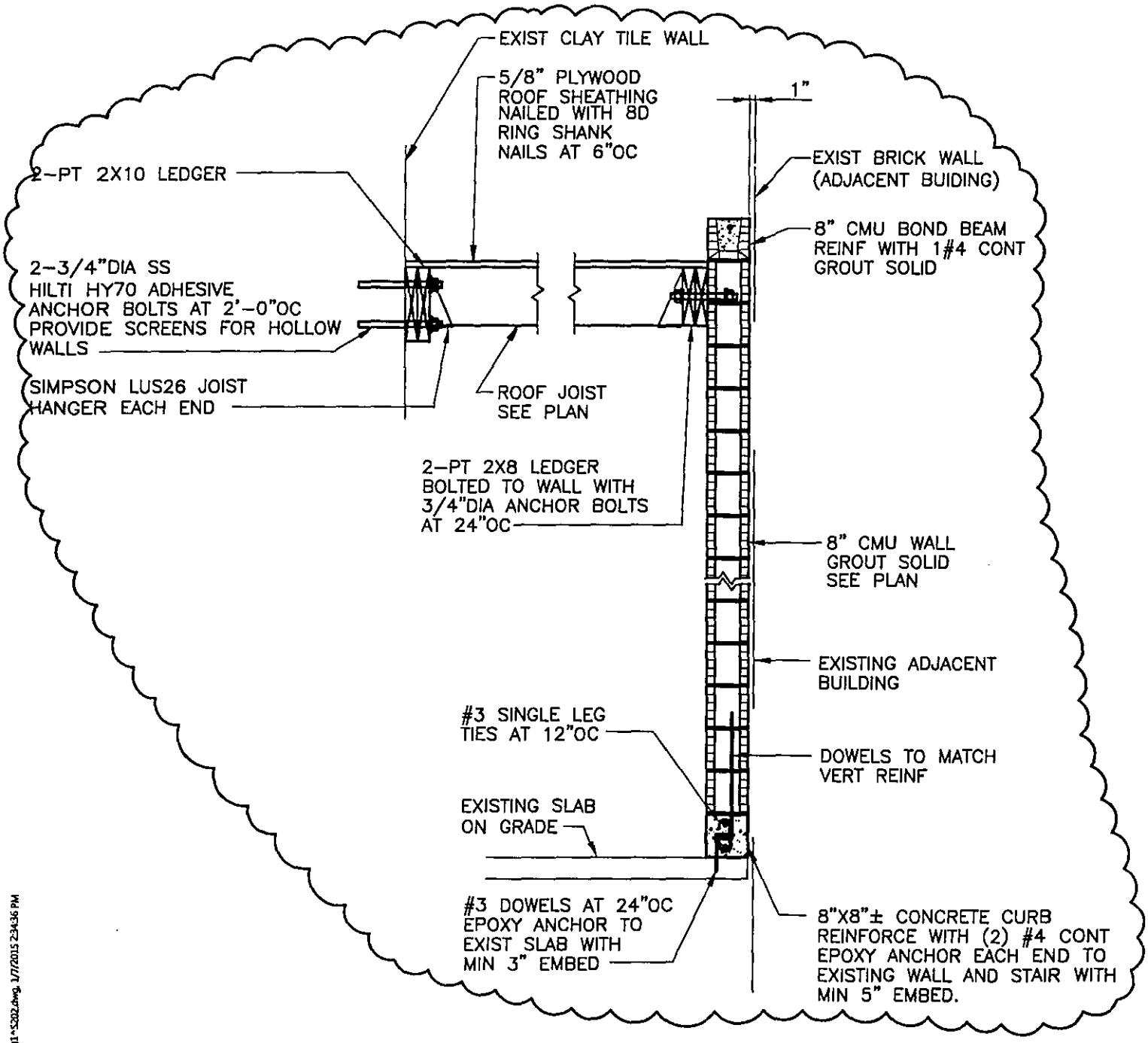

SECTION 7 / S-202

SCALE: $\frac{3}{4}$" = 1'-0"

JUDE T KOSTAGE PE 53931

SHEET TITLE	SCALE	REVISION	DATE
REVISED SECTION		△	01/07/15

ATLANTIC ENGINEERING SERVICES
6501 Arlington Expressway
Building B, Suite 201
Jacksonville, FL 32211
PH: 904.743.4633 FX: 904.725.9295
FL COA #791 SC COA #1691

PROJECT: SNYDER HALL, 226 NORTH LAURA STREET

PROJECT NO. 311-201.01

WORK W/ SHEET S-202

SKETCH NO. SK-11

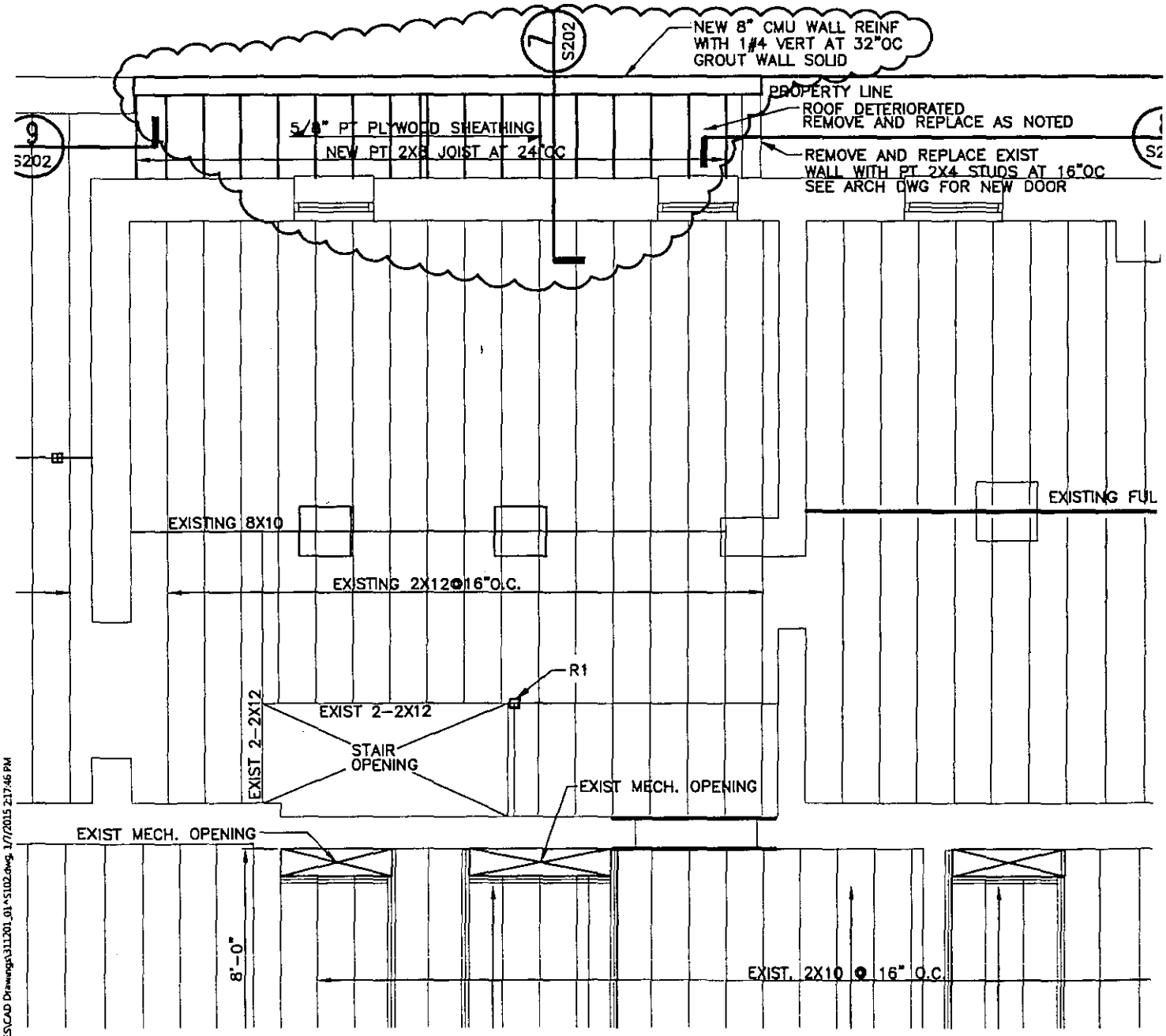

JUDE T KOSTAGE PE 5393

SHEET TITLE	SCALE	REVISION	DATE
PARTIAL ROOF FRAMING PLAN			01/07/15

ATLANTIC ENGINEERING SERVICES
6501 Arlington Expressway
Building B, Suite 201
Jacksonville, FL 32211
PH: 904.743.4633 FX: 904.725.9295
FL COA #791 SC COA #1691

PROJECT
SNYDER HALL
226 NORTH LAURA STREET

PROJECT NO. 311201.01
WORK W/ SHEET S102
SKETCH NO. SK-10