SUBJECT: **RFQ FOR DESIGN-BUILD SVCS FOR HORIZONTAL/CIVIL ENGINEERING PROJECTS**

BID # **CDB-0006-16** OPEN DATE: **10/21/2015**

# COMPETITIVE SEALED PROPOSAL EVALUATION COMMITTEE

KIND AND BASIS OF CONTRACT:
**CONSTRUCTION – DESIGN/BUILD**

AGENCY: **DEPARTMENT OF PUBLIC WORKS**

BASIS OF AWARD: **QUALIFICATIONS BASED**

NUMBER OF BIDS INVITED: 5 NUMBER RECEIVED: 5 OTHER: 1

## SUMMARY OF BIDS AND RECOMMENDED ACTIONS:

The Department of Public Works has completed negotiations with J.B. Coxwell Contracting, Inc., for Underground Tank Access Cover in accordance with subject bid.

Recommend approval of award to J. B. Coxwell Contracting, Inc., to provide initial assessments for access covers for 25 locations and prepare a cost estimate to retrofit each site with new access covers. Phase 1 also includes the construction cost to retrofit the access covers on the septic tank at Bruce Park. Guaranteed Maximum Price in the amount of $49,194.00, per "Exhibit I1" and allowing for the completion of work within 30 days from notice to proceed.

Funding for this project to be executed by Amendment 7A for contract # 6533-54 and encumbered by account(s): PWEN462SW-06505-PW0840-01 to be executed by formal contract through Office of General Counsel.

Attachments: Recommendation Memo, Exhibit "I1", Previous Award

BUYER Marilyn Laidler
MARILYN LAIDLER

RESPECTFULLY SUBMITTED
GREGORY PEASE, CHIEF
PROCUREMENT DIVISION

CONCURRENCE BY: **Tom Fallin, P.E., Chief-Engineering & Construction Management Division**

---

**(ALL AWARD ACTIONS SUBJECT TO LAWFULLY APPROPRIATED FUNDS)**
ACTION OF CSPEC COMMITTEE ON RECOMMENDATIONS ABOVE

MEMBERS APPROVING_____ MEMBERS DISAPPROVING_____ DATE:_____

_____ _____ OTHER_____

_____ _____

_____ _____

_____ _____

_____ _____

---

ACTION OF AWARDING AUTHORITY DATE _____

APPROVED_____ DISAPPROVED: _____

OTHER: _____

SIGNATURE OF AUTHENTICATION _____

ONE CITY. ONE JACKSONVILLE.

# City of Jacksonville, Florida

*Lenny Curry, Mayor*

Department of Public Works
Engineering & Construction Management Division
214 N. Hogan Street, 10th Floor
Jacksonville, FL 32202
(904) 255-8762
www.coj.net

November 28, 2017

**TO:** Gregory W. Pease
Chief of Procurement

**THRU:** John P. Pappas, P.E.
Director

**FROM:** Tom Fallin, PE
Chief, Engineering and Construction Management Division

**SUBJECT:** CDB-0006-16 – Design-Build Services - Horizontal & Civil Engineering – Underground Tank Access Cover AMENDMENT 7A

---

Based on the design criteria package, the Department of Public Works, in accordance with Design/Build CDB-0006-16, Contract 6533-54, has completed negotiations with J. B. Coxwell Contracting, Inc., to provide initial assessments for access covers for 25 locations and prepare a cost estimate to retrofit each site with new access covers. Phase 1 also includes the construction cost to retrofit the access covers on the septic tank at Bruce Park. Negotiations have resulted in the GMP amount of $49,194.00, as indicated on the attached Scope & Fee Summary, Exhibit I1 and allowing for the completion of the work within 30 days from notice to proceed.

Accordingly, this is to recommend that Contract No #6533-54, originally executed May 2, 2016, between the City and J. B. Coxwell Contracting, Inc. for Design-Build Services- Horizontal & Civil Engineering, be amended to incorporate the attached Scope and Fee Summary, Exhibit I1 for Underground Tank Access Cover for the GMP amount of ~~$86,485.00~~ $49,194.00 known as Amendment 7A.

To be encumbered as follows:

| | |
|---|---|
| PWEN462SW-06505-PW0840-01 | $49,194.00 |
| **TOTAL** | **$49,194.00** |

TF/lw

Attachment: Exhibit H1

**J.B. Coxwell Contracting, Inc.**
6741 Lloyd Road West
Jacksonville, Florida 32254
Office (904) 786-1120 Fax (904) 783-2970

November 27, 2017

Tom Fallin, P.E.
City of Jacksonville Department of Public Works
Engineering & Construction Management Division
214 N. Hogan Street, 10th Floor
Jacksonville, Florida 32202

**Re: Scope of Services and Fee Proposal for Underground Tank Access Cover (Ph 1)**
**Design-Build Construction Delivery for City of Jacksonville-RFQ CDB-0006-16**
**City Contract No. 6533-54**

Dear Mr. Fallin:

J.B. Coxwell Contracting, Inc. (JBCCI) is pleased to submit for your review and consideration the following design-build scope of services and lump sum fee proposal for Phase 1 underground tank access cover assessments, and construction services to modify the access covers at the Bruce Park location.

The Phase 1 scope of work includes the underground tank access cover assessments for 8 each COJ Building Department locations, and 17 each COJ Parks and Recreation locations listed on the attached spreadsheets. JBCCI will obtain information during the initial access cover assessments to prepare a cost estimate to retrofit each site with new access covers. The Phase 1 scope of work also includes the cost to retrofit the access covers on the septic tank at Bruce Park per the attached detail.

The proposed total lump sum amount for the Phase 1 underground access cover assessments, and construction to modify the 2 each tank lids at Bruce Park is $49,194.00. This lump sum proposal is inclusive of only the services listed and which are anticipated at this time. No services or work other than those noted in this proposal are included. In addition, any unknown condition(s) which may surface during design and construction or any other increase in scope of services may result in a request for additional services. No work will proceed however, without first obtaining approval from the City for any additional services.

We are again very appreciative of the opportunity to provide you with our design-build services. Should you have any questions or need any further information, please do not hesitate to contact us. We are also available to review and discuss this proposal with you and/or others at your convenience.

Regards,

***J.B. Coxwell Contracting, Inc.***

Jayson Smith,
Design Build Manager

Cc: Nicholas E. Mousa, AICP, Director -Florida Market Initiatives (GAI)
Christopher C. Blank, VP of Operations (JBCCI)

| | LOCATION NAME | ADDRESS | ZIP | CD# | NOT ERS | # LIFT STATION LIDS | # SEPTIC LIDS |
|---|---|---|---|---|---|---|---|
| 19 | FIRE STATION # 51 | 10014 OLD ST AUGUSTINE RD | 32257 | 6 | | 2 | |
| 26 | JSO BOMB SQUAD WAREHOUSE | 7441 WILSON BV | 32210 | 10 | + | 2 | |
| 39 | OLD ANIMAL CONTROL AND PROTECTIVE SERVICES | 2580 1st STREET W | 32254 | 9 | | 6 | |
| 44 | SPECIAL EVENTS OUTER STORAGE BUILDING | 7443 WILSON BV | 32210 | 10 | + | 1 | |
| 45 | SULZBACHER HOUSING AND FOOD | 611 ADAMS ST E | 32202 | 7 | + | 3 | |
| 47 | SULZBACHER PRESIDENT AND CEO TRIPLE WIDE | 611 ADAMS ST E | 32202 | 7 | + | 1 | |
| 48 | TACTICAL SUPPORT A | 355 ELLIS RD S | 32254 | 10 | + | 1 | |
| 50 | TRAFFIC ENGINEERING | 1007 SUPERIOR ST | 32254 | 9 | + | 1 | |

8 - COJ PH I

| PARK NAME | ADDRESS | ZIP | TYPE OF COVER | # LIFT STATION LIDS | # SEPTIC LIDS |
|---|---|---|---|---|---|
| ALIMACANI PARK/BOAT RAMP #2 | 11080 HECKSCHER DRIVE | 32226 | Fiberglass | | 2 |
| BAKER-SKINNER PARK | 7641 POWERS AVENUE | 32217 | Fiberglass | 2 | |
| BROOKVIEW ELEMENTARY PARK | 10441 MCALEER ROAD | 32246 | Fiberglass | 1 | |
| BRUCE PARK | 6549 ARLINGTON ROAD | 32211 | Concrete | | 2 |
| BURNETT PARK #1 | 3740 BURNETT PARK ROAD | 32257 | Fiberglass | 1 | |
| EQUESTRIAN CENTER | 13611 NORMANDY BLVD | 32221 | Metal & Fiberglass | 1 | |
| FORESTVIEW CENTER | 4203 KENNDLE ROAD | 32208 | Concrete & Fiberglass | | 2 |
| JIM KING BOAT RAMP / SISTERS CREEK - BATHROOM | 8203 HECKSCHER DRIVE | 32226 | Fiberglass | 1 | |
| LAKE LUCINA ELEMENTARY PARK | 6527 MERRILL ROAD | 32277 | Metal & Fiberglass | 2 | |
| LEM MERRETT PARK #1 | 845 ELLIS ROAD | 32205 | Fiberglass | 1 | |
| LONNIE C. MILLER PARK #1 | 7689 PRICE LANE | 32208 | Fiberglass | 1 | |
| LONNIE C. MILLER PARK #2 | 7689 PRICE LANE | 32208 | Fiberglass | 1 | |
| MAXVILLE PARK #1 | 10865 PENNSYLVNIA AVENUE | 32234 | Fiberglass | | 1 |
| MURRAY HILL PLAYGROUND | 4208 KINGSBURY STREET | 32205 | Fiberglass | 1 | |
| OCEANWAY POOL | 12215 SAGO AVENUE | 32218 | Metal & Fiberglass | 3 | |
| RINGHAVER PARK #1 | 5198 118TH STREET | 32244 | Fiberglass | 1 | |
| VICTORY PARK | 3781 UNIVERSITY CLUB BLVD | 32277 | Fiberglass | 1 | |

17 - PARKS - PH I

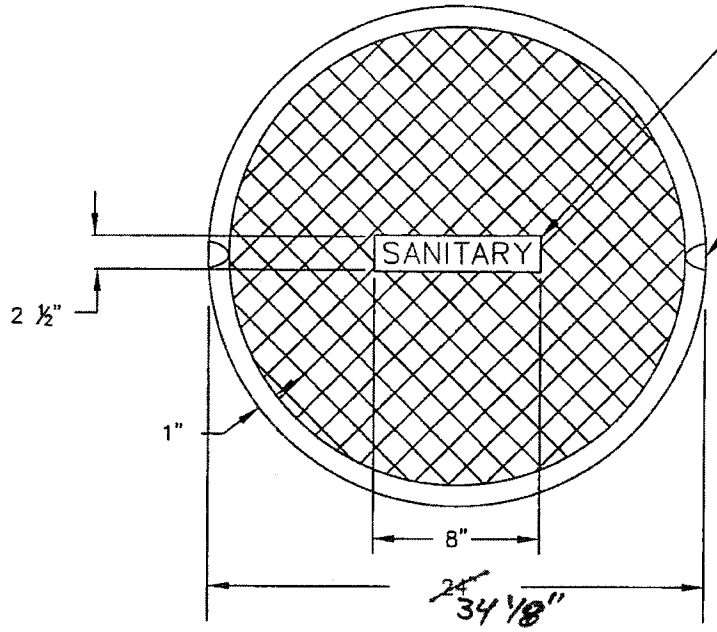


RAISED LETTERS 1" HIGH FLUSH WITH TOP OF COVER

2 – CONCEALED PICKHOLES

NOTES:
1. CAST IRON FRAME & COVER.
2. FRAME & COVER SHALL BE MACHINED OR GROUND AT TOUCHING SURFACES SO AS TO SEAT FIRMLY AND PREVENT ROCKING.
3. SET COVER FLUSH WITH GRATE.

COVER
(190 LBS. MIN.)

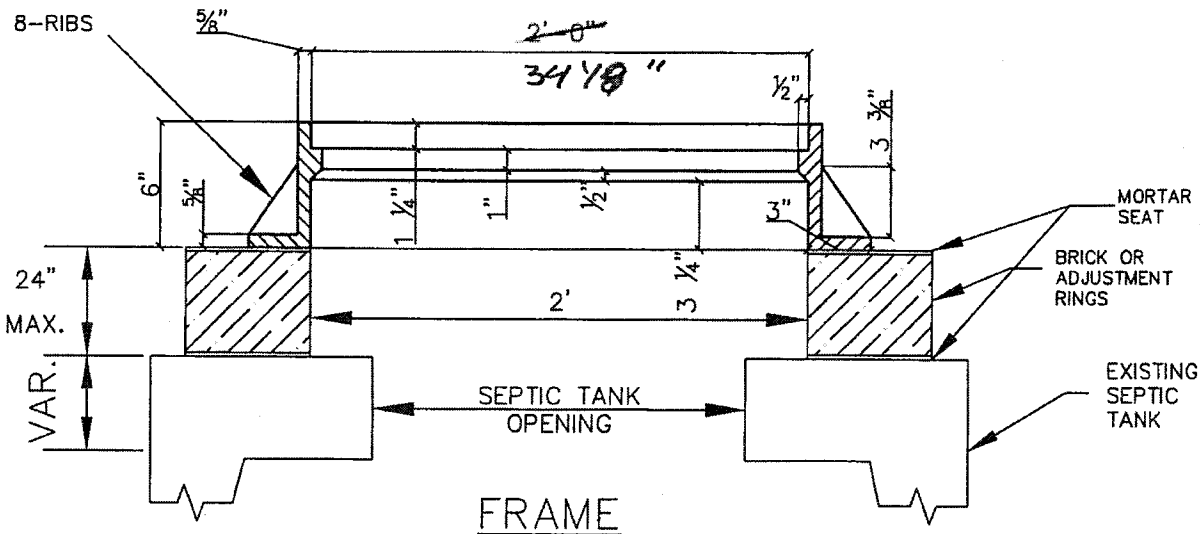


FRAME
(155 LBS. APPROX.)

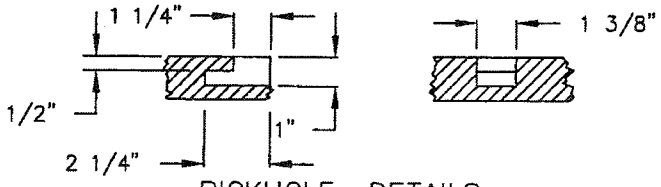


PICKHOLE DETAILS

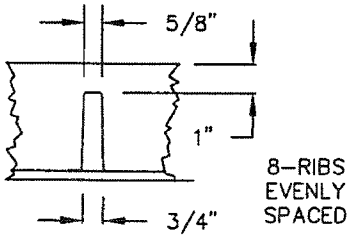


RIB DETAIL

| | | | |
|---|---|---|---|
| SEPTIC TANK RISER ADJUSTMENT | *CITY OF JACKSONVILLE STANDARD* | N.T.S. | PLATE |
| | | DATE DRAWN | |
| | | REVISED DATE | |

THE INFORMATION CONTAINED IN THIS DRAWING IS THE SOLE PROPERTY OF U.S. FOUNDRY & MANUFACTURING CORP. ANY REPRODUCTION IN PART OR AS A WHOLE WITHOUT THE WRITTEN PERMISSION OF U.S. FOUNDRY & MANUFACTURING CORP. IS PROHIBITED. U.S. FOUNDRY & MANUFACTURING CORP. RESERVES THE RIGHT TO MAKE MODIFICATIONS TO DESIGN WITHOUT PRIOR NOTICE. DRAWING IS UNCONTROLLED WHEN PRINTED. WEIGHTS AND DIMENSIONS ARE PROVIDED FOR REFERENCE ONLY **© 2014 US FOUNDRY AN EAGLE MANUFACTURING COMPANY**

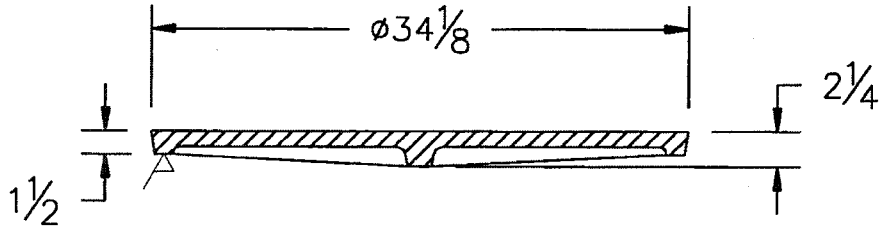


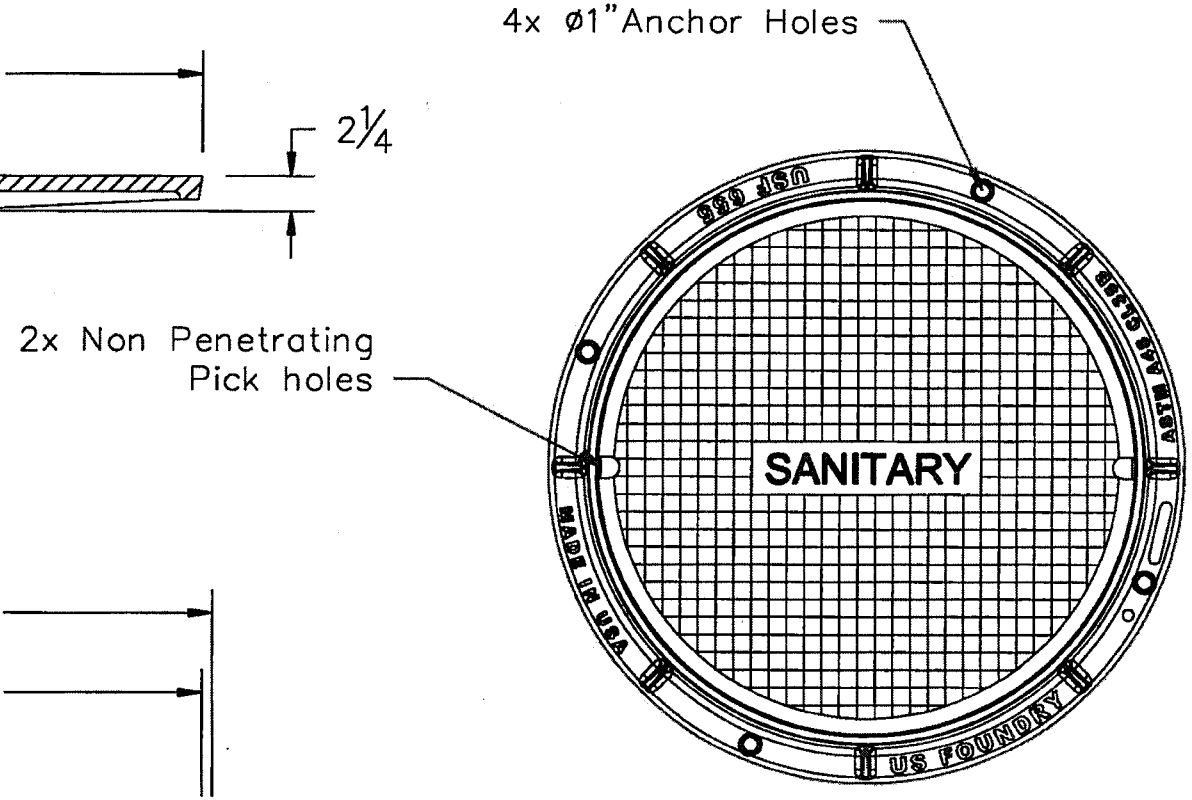


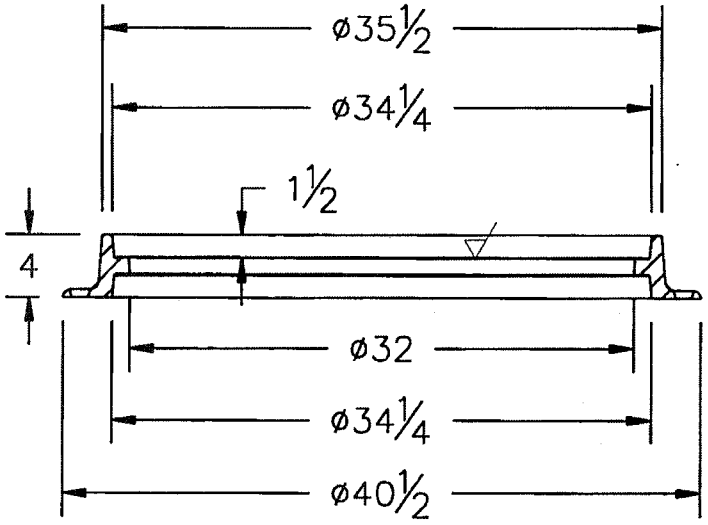


* Lid weighs approx. 260 lbs

US FOUNDRY
AN EAGLE MANUFACTURING COMPANY
8351 NW 93rd Street
Medley, FL, 33166-2025
ph: 1-800-432-9709
fax: 305-887-9429
www.usfoundry.com
© 2014 All Rights Reserved

USF 655 Ring & U Cover

| | | | |
|---|---|---|---|
| LOAD CLASSIFICATION: Heavy Duty | | | |
| MATERIAL: ASTM-A48 GRAY IRON CLASS35B | | | |
| Ring No: | 8020007 | SCALE: | 1"=1" |
| Cover No: | 8012889 | DATE: | 3/18/2014 |
| | | DWN. BY: | ULS/AB |
| Assembly No: | 8022211 | | |
| REV: 0 | DATE: | REV BY: | QUOTE# |

SUBJECT: RFQ- FOR DESIGN- BUILD SERVICES OF HORIZONTAL/CIVIL ENGINEERING PROJECTS

BID # CDB-0006-16 OPEN DATE: 10/21/2015

## COMPETITIVE SEALED PROPOSAL EVALUATION COMMITTEE

KIND AND BASIS OF CONTRACT:
**CONSTRUCTION – DESIGN/BUILD**

AGENCY: DEPARTMENT OF PUBLIC WORKS

BASIS OF AWARD: EVALUATION CRITERIA

NUMBER OF BIDS INVITED: 5 NUMBER RECEIVED: 5 OTHER: 1

**SUMMARY OF BIDS AND RECOMMENDED ACTIONS:**
The City had previously issued this RFP, and the evaluation committee has evaluated proposals. Subsequently, presentations were conducted and evaluated on January 28, 2016. Based upon the combination of proposal and presentation evaluations, scores and rankings are as follows (Listed in alphabetical order):

2) Archer-Western – 118.25
3) Callaway Contracting, Inc. - 100
1) J.B. Coxwell Contracting, Inc. - 121.5

Recommend approval of award to J.B. Coxwell Contracting, Inc., as receiving the highest score in accordance with the evaluation and ranking above. Period of Service will be five (5) years from effective date of contract with funding not-to-exceed $6,000,000.00 annually. To be executed by formal contract through Office of General Counsel.

Attachments: Recommendation Memo, Scoring Matrix, Previous Award

BUYER Marilyn Laidler
MARILYN LAIDLER

RESPECTFULLY SUBMITTED
GREGORY REASE, CHIEF
PROCUREMENT DIVISION

CONCURRENCE BY: Thomas N. Fallin, P.E., Acting Chief-Engineering & Construction Management Division

**(ALL AWARD ACTIONS SUBJECT TO LAWFULLY APPROPRIATED FUNDS)**
ACTION OF CSPEC COMMITTEE ON RECOMMENDATIONS ABOVE

MEMBERS APPROVING 5 MEMBERS DISAPPROVING _____ DATE: 2/4/16

OTHER _____

ACTION OF AWARDING AUTHORITY DATE 2/04/16

MR APPROVED ✓ DISAPPROVED: _____

Sam E. Mousa
Chief Administrative Officer
For: Mayor Lenny Curry
Under Authority of
Executive Order No. 2015-05

OTHER: _____

SIGNATURE OF AUTHENTICATION _____

SUBJECT: RFQ- FOR DESIGN- BUILD SERVICES OF HORIZONTAL/CIVIL ENGINEERING PROJECTS

BID # CDB-0006-16

OPEN DATE: 10/21/2015

## COMPETITIVE SEALED PROPOSAL EVALUATION COMMITTEE

KIND AND BASIS OF CONTRACT:
**CONSTRUCTION – DESIGN/BUILD**

AGENCY: DEPARTMENT OF PUBLIC WORKS

BASIS OF AWARD: EVALUATION CRITERIA

NUMBER OF BIDS INVITED: 5 NUMBER RECEIVED: 5 OTHER: 1

**SUMMARY OF BIDS AND RECOMMENDED ACTIONS:**
The City had previously issued this RFP, and the evaluation committee has evaluated proposals. Based upon the proposal evaluation, the average scores and rankings are as follows (Listed in alphabetical order):

2) Archer-Western Contractors, LLC. – 91
1) J.B. Coxwell Contracting- 92
3) Callaway Contracting- 74

Pursuant to Section 2.6 – Award of Contract of the RFP, recommend approval to conduct formal interviews with each of the three-top ranked Firms.

Attachments: Recommendation Memo, Scoring Matrix, Bid Tabulation, Section 2.6, JSEB Letter

BUYER Marilyn Laidler
MARILYN LAIDLER

RESPECTFULLY SUBMITTED
GREGORY PEASE, CHIEF
PROCUREMENT DIVISION

CONCURRENCE BY: William J. Joyce, P.E., Chief-Engineering & Construction Management

**(ALL AWARD ACTIONS SUBJECT TO LAWFULLY APPROPRIATED FUNDS)**
ACTION OF CSPEC COMMITTEE ON RECOMMENDATIONS ABOVE

MEMBERS APPROVING 5 MEMBERS DISAPPROVING _____ DATE: 12-30-15

OTHER _____

ACTION OF AWARDING AUTHORITY DATE 1/01/16

APPROVED ✓ DISAPPROVED: _____

OTHER: _____

Sam E. Mousa
Chief Administrative Officer
For: Mayor Lenny Curry
Under Authority of:
Executive Order No. 2015-05

SIGNATURE OF AUTHENTICATION

```
  QWS3270X   11/28/2017  1:16 PM
FAML6350 V5.1              **    NW COJ FAMIS PRODUCTION      **     11/28/2017
LINK TO:                       ACCOUNT SUMMARY INQUIRY                   1:15 PM

FISCAL MO/YEAR  : 02 2018                                CURRENCY CODE :
INDEX CODE      : PWEN462SW     DSR CAPITAL IMPROVEMENTS
SUBOBJECT       : 06505         OTHER CONSTRUCTION COSTS
PROJECT         : PW0840        JOSE CIRCLE NORTH(DSR) CAP IMPROVEMENT
PROJECT DETAIL  : 01            JOSE CIRCLE NORTH(DSR) CAP IMPROVEMENT
GRANT           :
GRANT DETAIL    :
USER CODE       :
-------------------------------------------------------------------------------
S                                NOV  2017    ANNUAL BALANCE ALL YEARS BALANCE
  ESTIMATED REVENUES                  .00               .00               .00
  REVENUES                            .00               .00               .00
    UNREALIZED REVENUES               .00               .00               .00
  BUDGET                              .00        150,000.00        150,000.00
  EXPENDITURES                        .00               .00               .00
  ENCUMBRANCES                        .00               .00               .00
  PRE-ENCUMBRANCES                    .00               .00               .00
    REMAINING BALANCE                 .00        150,000.00        150,000.00
F1-HELP      F2-SELECT                F4-PRIOR     F5-NEXT
                         F9-LINK      F10-PRIOR-MO F11-NEXT-MO
G005 - PRIOR RECORD DISPLAYED
```