**SUBJECT: YATES BLDG PARKING GARAGE- ACCESSIBILITY IMPROVEMENTS**

**BID #: CF-0142-16** **OPEN DATE:** 2016-07-20

**GENERAL GOVERNMENT AWARDS COMMITTEE**

**KIND AND BASIS OF CONTRACT: CONSTRUCTION FIXED**

**AGENCY: PUBLIC WORKS**

**BASIS OF AWARD: TOTAL LUMP SUM BASE BID – LOWEST RESPONSIVE, RESPONSIBLE BIDDER**

**NUMBER OF BIDS INVITED:** (4) **NUMBER RECEIVED:** (4) **OTHER** (0)

**SUMMARY OF BIDS AND RECOMMENDED ACTIONS:**
Subject bid was approved on 09/15/16 to Onas Corporation (contract #7920-43), in the amount of $438,000.00.

Recommend approval of Change Order #1 to Onas Corporation, in the amount of $10,544.94, for a revised maximum indebtedness not-to-exceed $448,544.94.

This award is to be funded by account: PWCP32EPB519-069505-PW0755-01 to be executed by contract change order through Office of General Counsel.

Attachments: Recommendation Memo, Change Order, Previous Award

**ANALYST:** Marilyn Laidler
MARILYN LAIDLER

**RESPECTFULLY SUBMITTED** _____
GREGORY PEASE, CHIEF
PROCUREMENT DIVISION

**CONCURRENCE BY: Tom Fallin, P.E., Chief, Engineering and Construction Management Division**

---

**(ALL AWARD ACTIONS SUBJECT TO LAWFULLY APPROPRIATED FUNDS)**
ACTION OF GGAC COMMITTEE ON RECOMMENDATIONS ABOVE

MEMBERS APPROVING _____ MEMBERS DISAPPROVING _____ DATE: _____

_____ _____ OTHER: _____

_____ _____

_____ _____

**ACTION OF AWARDING AUTHORITY** DATE _____

APPROVED _____ DISAPPROVED _____

OTHER _____

SIGNATURE OF AUTHENTICATION _____

# City of Jacksonville, Florida

*Lenny Curry, Mayor*

Department of Public Works
Engineering & Construction Management Division
214 N. Hogan Street, 10th Floor
Jacksonville, FL 32202
(904) 255-8762
www.coj.net

ONE CITY. ONE JACKSONVILLE.


October 18, 2017

TO: Gregory W. Pease
Chief of Procurement

THRU: John P. Pappas, P.E.
Director

FROM: Tom Fallin, P. E.
Chief, Engineering and Construction Management Division

Thomas G. McKnight
Capital Improvement Construction Manager

SUBJECT: Yates Building Parking Garage Accessibility Improvements
BID# CF-0142-16
Contract 7920-43

The subject contract was awarded under BID# CF-0142-16 in the amount of $438,000.00 to Onas Corporation, Contract 7920-43. Change order #1 is detailed on the attached spreadsheet in the amount of $10,544.94.

Accordingly, this is to recommend approval for change order 1 to contract 7920.43 to Onas Corporation in the amount of $10,544.94. The maximum indebtedness to the city will be $448,544.94.

Funding for the change order to be encumbered by contract is as follows:

| ACCOUNT NO. | ENCUMBERED AMOUNT |
|---|---|
| PWCP32EPB519-069505-PW0755-01 | $10,544.94 |
| TOTALS | $10,544.94 |

TF/lw

Attachments

ab

ONAS CORPORATION
YATES BUILDING PARKING GARAGE "ACCESSIBILITY IMPROVEMENTS"
CONTRACT # 7920-43

CHANGE ORDER NO. 1
10/18/2017

| NBR | MASTER ITEM DESCRIPTION | QUANTITY | UOM | UNIT COST | ADDITION | DELETION | TOTAL |
|---|---|---|---|---|---|---|---|
| | **UNFORESEEN CONDITIONS** | | | | | | |
| 1 | GRINDING OF EXISTING PARKING AREA | 1 | LS | $11,456.30 | $11,456.30 | | |
| | JUSTIFICATION: During construction it was found that various areas exceeded the 2% maximum for ADA spaces. These areas were unknown until the grinding process began. A meeting was held with COJ ADA Inspector, Onas Corp, and C&ES to determine the areas that needed grinding to meet the 2% maximum. | | | | | | |
| 2 | GRINDING OF EXISTING WALKWAY AREA | 1 | LS | $3,172.85 | $3,172.85 | | |
| | JUSTIFICATION: During construction it was found that an area around an existing drainage inlet exceeded the 2% maximum for ADA walkways. The area was unknown until the grinding process began. A meeting was held with COJ ADA Inspector, Onas Corp, and C&ES to determine the area that needed grinding to meet the 2% maximum. | | | | | | |
| | **TOTAL UNFORESEEN CONDITIONS** | | | | | | **$14,629.15** |
| | **ADDITIONAL SCOPE** | | | | | | |
| 3 | ADDITIONAL RAILING | 1 | LS | $1,738.00 | $1,738.00 | | |
| | JUSTIFICATION: There is a step at the new ADA parking space at the west end of the parking garage. It was requested by the Yates Building Supervisor that this hand rail be installed to avoid any potential tripping hazards. | | | | | | |
| 4 | ADDITIONAL HAND RAIL AT STAIR WELL 1 & 2 | 1 | LS | $1,265.00 | $1,265.00 | | |
| | JUSTIFICATION: The top deck of the parking garage where stair well #1 and stair well #2 descend to level 5 has an existing concrete wall that is not at the minimum height for ADA. It was determined that the addition of hand rail to the top of the existing wall will aid in safety. | | | | | | |
| | **TOTAL ADDITIONAL SCOPE** | | | | | | **$3,003.00** |
| | **ERRORS & OMISIONS** | | | | | | |
| 5 | ACCESSIBLE SIGNS | 1 | LS | $1,107.79 | $1,107.79 | | |
| | JUSTIFICATION: The construction plans call for accessible route signs to be installed in this contract. The plans call for the "signs by others" which the Contractor considered out of his scope. | | | | | | |
| | **TOTAL ERRORS & OMISIONS** | | | | | | **$1,107.79** |
| | **RECONCILE QUANTITIES** | | | | | | |
| 6 | ELECTRICAL SYSTEMS | -1.0000 | LS | $8,195.00 | | ($8,195.00) | |
| | JUSTIFICATION: Once construction had begun and after the systems for the video intercom doorbell had been ordered by the contractor, the facilities manager removed the system from the contract. The system could not be returned to the manufacturer and was delivered to the City at the final inspection walk thru by Siemens Industry, Inc. Credit is for the base contract amount for the system, less the equipment. | | | | | | |
| | **TOTAL RECONCILE QUANTITIES** | | | | | | **($8,195.00)** |
| | TOTAL CHANGE ORDER #1 | | | | $18,739.94 | ($8,195.00) | |
| | **NET TOTAL CHANGE ORDER NO.1** | | | | **$10,544.94** | | |

# YATES PARKING GARAGE

## REVISED CHANGE ORDER REQUEST NO. 1

Site meeting on January 26, 2017 Instructing Onas Corporation to grind areas outlined in Red and to fill area at West End of Parking including + or – 1.5 ft. of end parking space and 5 ft. wide walkway.

The Costs incurred are as follows:

1. Grind Red-marked areas consisting of approximately 260 sf.

| | | | |
|---|---|---|---|
| Grinder rental and supplies. | | $ 400.00 | |
| Foreman | 30 Hours at $32.00 an hour | $ 960.00 | |
| Operator | 60 Hours at $25.00 an hour. | $ 1,500.00 | |
| | TOTAL | | $ 2,860.00 |

2. Check Elevation of Fill Area to determine Elevations Required.

| | | | |
|---|---|---|---|
| Foreman | 6 Hours at $32.00 an hour | $ 192.00 | |
| Labor/Helper | 6 Hours at $25.00 an hour. | $ 150.00 | |
| | TOTAL | | $ 342.00 |

3. Set grids and expansion point for screens saw cut outline for control

| | | | |
|---|---|---|---|
| Foreman | 8 hours at $32.00 an hour | $ 256.00 | |
| Operator | 8 hours at $25.00 an hour | $ 200.00 | |
| | TOTAL | | $ 456.00 |

***** See attached drawing for clarification.*****

4. Grind minimum 1/4" at tie in to existing concrete.

| | | | |
|---|---|---|---|
| Grinder Rental | | $ 80.00 | |
| Foreman/Operator | 4 Hours at $29.00 an hour | $ 116.00 | |
| Laborers (2) | 8 Hours at $25.00 an hour. | $ 200.00 | |
| | TOTAL | | $ 396.00 |

5. Scarify concrete surface as required by material mfg. for bonding.

| | | | |
|---|---|---|---|
| Scarify Rental | 8 Hours at $120.00 | $ 960.00 | |
| Foreman/Operator | 8 Hours at $32.00 an hour | $ 256.00 | |
| Laborers | 8 Hours at $25.00 an hour. | $ 200.00 | |
| | TOTAL | | $ 1,416.00 |

6. Estimated to place concrete topping. Topping materials for pouring/walkway and transition landing at tie-in to 7 Ft. wide East – West Walk.

| | | | |
|---|---|---|---|
| Est. 68 Bag + 5% | 68 bags at $40.00per bag | $ 2,720.00 | |
| Equipment/mixer | | $ 60.00 | |
| Place Topping | | | |
| Foreman/Finisher | 16 Hours at $32.00 an hour | $ 512.00 | |
| Laborers (2) | 32 Hours at $25.00 an hour. | $ 800.00 | |
| 1 Mixer/Batcher | 16 Hours at $25.00 an hour | $ 400.00 | |
| | TOTAL | | $ 4,492.00 |
| | Sub Total | | $ 9,962.00 |
| | 15% | | $ 1,494.30 |
| | Complete Total | | $ 11,456.30 |

Time Extension: Add 4 weeks.

Submitted by

Bandele Onasanya, President
ONAS Corporation

01.26.2017 07:58

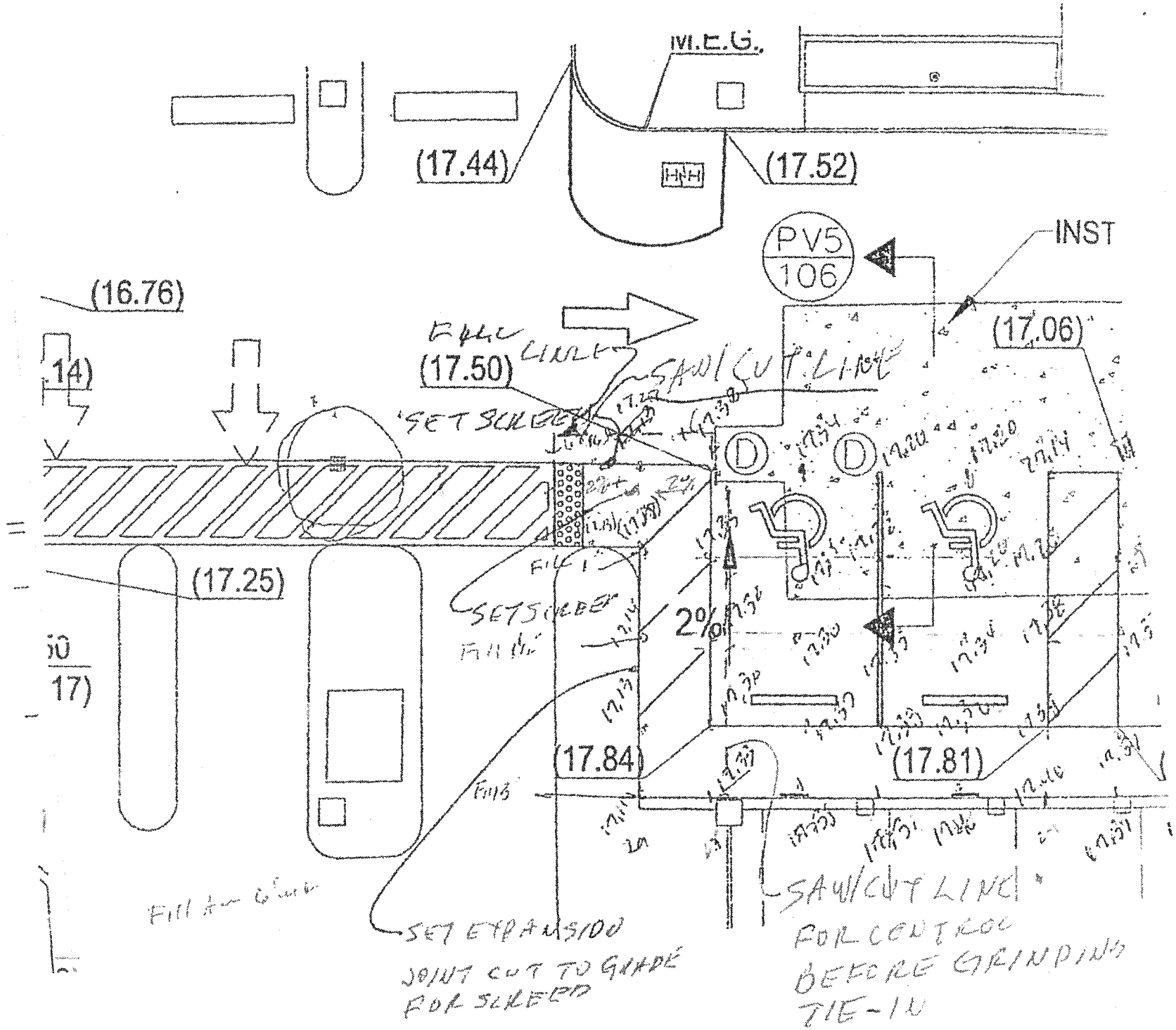
M.E.G.
(17.44)
(17.52)
PV5
106
INST
(16.76)
(17.06)
(17.50)
SAW CUT LINE
SET SCREED
(17.25)
SET SCREED
2%
(17.84)
(17.81)
SAW CUT LINE
FOR CONTROL
BEFORE GRINDING
TIE-IN
SET EXPANSION
JOINT CUT TO GRADE
FOR SCREED

# YATES PARKING GARAGE

## REVISED CHANGE ORDER REQUEST NO. 3

In response to RFI #8 ONAS Corporation proposes to correct the slope at 7 ft. wide east-west walkway as follows:

1. Grinding Perimeter at existing concrete to provide minimum ¼" tie-in.
2. Scarify surface as required by manufacturing for bonding.
3. Weld steel Plate to existing grate to raise as required.
4. Place concrete topping mix to correct cross slope.

| | | | |
|---|---|---|---|
| Grinder Rental - 1 day | | | $ 400.00 |
| Scarify Equipment – 1 day | | | $ 350.00 |
| Foreman/Grinder Operator | 6 Hours at $32.00 an hour | $ 192.00 | |
| Helper Operator (2) | 12 Hours at $25.00 an hour. | $ 300.00 | |
| Topping | 20 bags + or -@ $40.00 | $ 800.00 | |
| Concrete Foreman Finisher | 6 Hours at $29.00 | $ 174.00 | |
| Concrete Finisher | 6 Hours at $28.00 | $ 168.00 | |
| Concrete Laborer | 6 Hours at $25.00 | $ 150.00 | |
| Concrete Mixer | 6 Hours at $25.00 | $ 150.00 | |

5. Furnish and weld steel plates to existing grates. $ 75.00

| | |
|---|---|
| Sub Total | $ 2,759.00 |
| 15% | $ 413.85 |
| **TOTAL** | $ 3,172.85 |

Time Extension: Add 1 week.

Submitted by

Bandele Onasanya, President
ONAS Corporation

DEPARTMENT OF PUBLIC WORKS

Jacksonville
Where Florida Begins.

# REQUEST FOR INFORMATION (RFI)

PROJECT: Yates Parking Garage

DATE: April 14, 2017

RFI # Rev. 8

CONTRACTOR Onas Corporation

SPEC REF. C-104-1

CONTRACT/P O # 7920-43

DWG REF

RFI DESCRIPTION Please see attached drawing with workup of existing elevation. The Slope of existing 12" x 12" grating seems to be the main problem with this area. This is approximately A 6' diameter area sloping to drain. Raising the grade to 13" or approximately ¾" and placing a thin set topping with Mopicum 102 would be one possible solution. Also, see sketch of existing direction/arrow locations not as shown on contract drawing.

SUBMITTED BY: Irvin Goodrich

Contractor's Representative

REQUEST REPLY BY

REPLY Raise grade around 12" X 12" grate using thin set topping is acceptable.

Provide manufacturer's information for "Mopicum 102".

Existing painted direction arrows on pavement are to remain.

NOTE: Inspector [illegible] not to remove [illegible] Arrows out of work

Digitally signed by Stephen Manis
Date: 2017.05.10 06:33:42 -04'00'

REPLY BY: DATE:

Owner's Representative

This reply does not necessarily constitute an increase in contract value or time. Any Change in contract value or time will require supplemental information submitted by the contractor for review and approval.

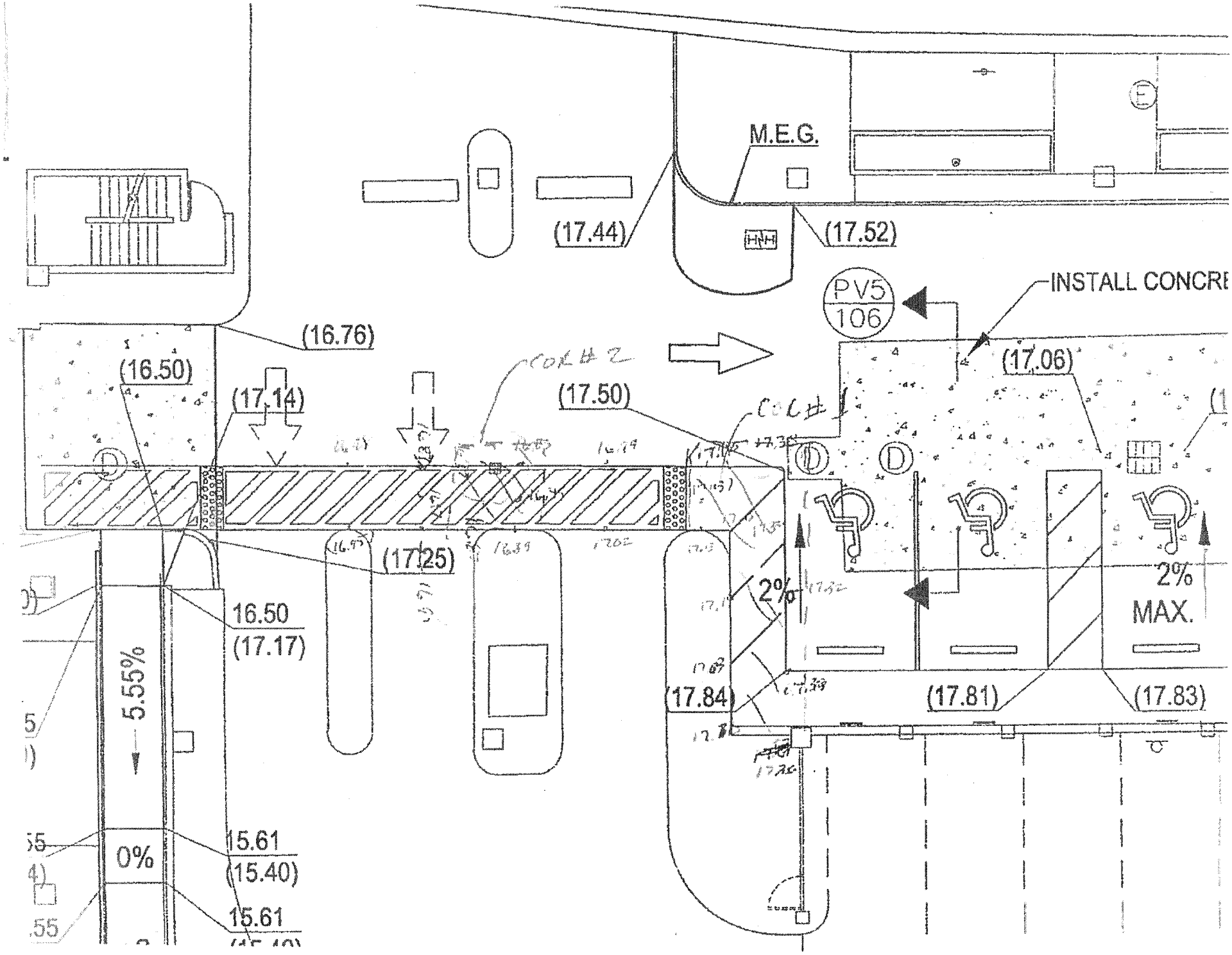
M.E.G.
(17.44)
(17.52)
PV5
106
INSTALL CONCRE
(16.76)
(16.50)
(17.14)
(17.50)
(17.06)
(17.25)
16.50
(17.17)
5.55%
0%
15.61
(15.40)
15.61
2%
2%
MAX.
(17.84)
(17.81)
(17.83)

# YATES PARKING GARAGE

## Revised CHANGE ORDER REQUEST NO. 2

ONAS Corporation to provide as requested 24' 3" LF of 36" railing for attached drawing.

| | | |
|---|---|---|
| Sub-Contractor Supplies | $1,580.00 | |
| 10% of $1,580 | $ 158.00 | |
| | Total | **$ 1,738.00** |

Time Extension: Add 3 days.

See attached Subs Pricing

Submitted by

Bandele Onasanya, President
ONAS Corporation

BRACKET WORKS INC.

8330 RHODEN TAYLOR LANE
MAXVILLE, FL 32234
FAX 904-289-7654
PH 904-591-5118

# QUOTE # BWI16023X

Date: May 23, 2017

To: ONAS CORPORATION

Job: YATES PARKING GARAGE
RFI #9 ALUMINUM RAILING
JACKSONVILLE, FLORIDA

BRACKET WORKS, INC. PROPOSES TO FURNISH &/or INSTALL MISCELLANEOUS STEEL AS LISTED BELOW PER RFI # 9:

**ITEMS FURNISHED & INSTALLED:**

1. **APPROX. 25 L/F OF 36" TALL SINGLE LINE 1-1/2" ALUMINUM PIPE RAILING CORE DRILLED AND GROUTED**

**LUMP SUM PRICE $ 1,580.00**

**ACCEPTED BY:** [signature]
**PRINT NAME:** [illegible]
**TITLE:** [illegible]

**Respectfully,**

Gerald R Taylor
**Gerald R. Taylor President**

DEPARTMENT OF PUBLIC WORKS

Jacksonville
Where Florida Begins.

# REQUEST FOR INFORMATION (RFI)

PROJECT: Yates Parking Garage

DATE: April 7, 2017

RFI # 9

CONTRACTOR: Onas Corporation

SPEC REF: See Attached

CONTRACT/P.O. #: 7920-43

DWG REF:

RFI DESCRIPTION 1. Please give detail for requested 36", Aluminum Railing for 1426 RF #4, response. See attached Drawing shows a drop off areas.

SUBMITTED BY: Irvin Goodrich
Contractor's Representative

REQUEST REPLY BY:

REPLY: REFER TO ATTACHED RAILING ELEVATIONS + SECTION.

REPLY BY:
Owner's Representative

DATE: 10 APR 2017

This reply does not necessarily constitute an increase in contract value or time. Any Change in contract value or time will require supplemental information submitted by the contractor for review and approval.

CC: STEVE MANIS, P.E. / T. COX / M. WILLIAMS, P.E.

VRL ARCHITECTS, INC.
1449 Palm Avenue
Jacksonville, FL 32207
License # AA C001735
Phone: (904) 723-3895
Fax: (904) 725-5564
VRL@VRLarchitects.com
www.VRLarchitects.com

V·R·L
Architects, Inc.
VRL146

JOB YATES PARKING GARAGE ACCESSIBILITY IMPROVEMENTS
SHEET NO. 1 OF 2
CALCULATED BY SFL DATE 10 APR 2017
CHECKED BY SFL DATE 10 APR 2017
SCALE AS SHOWN

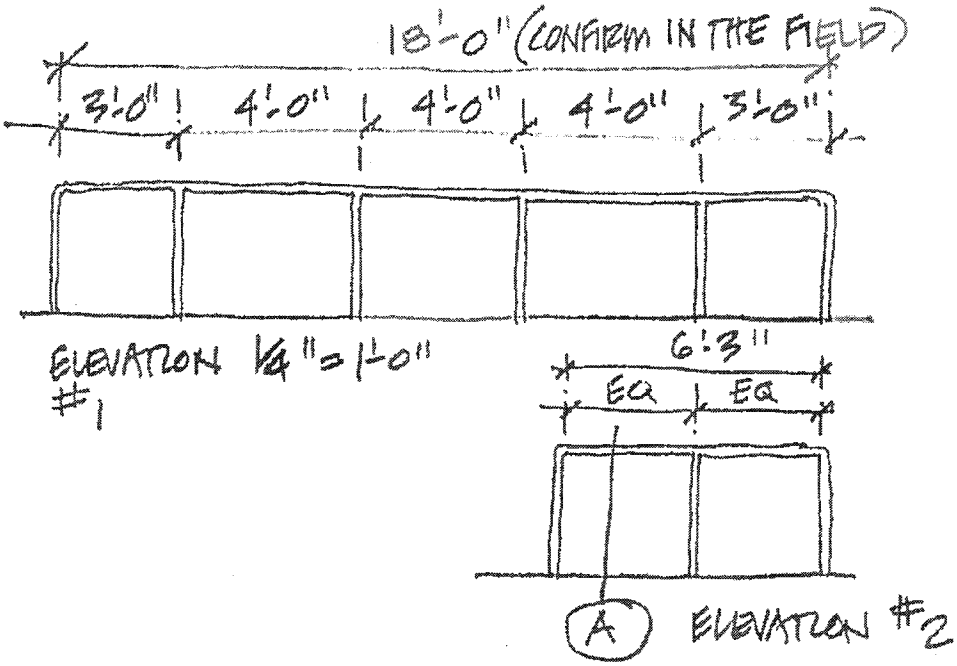


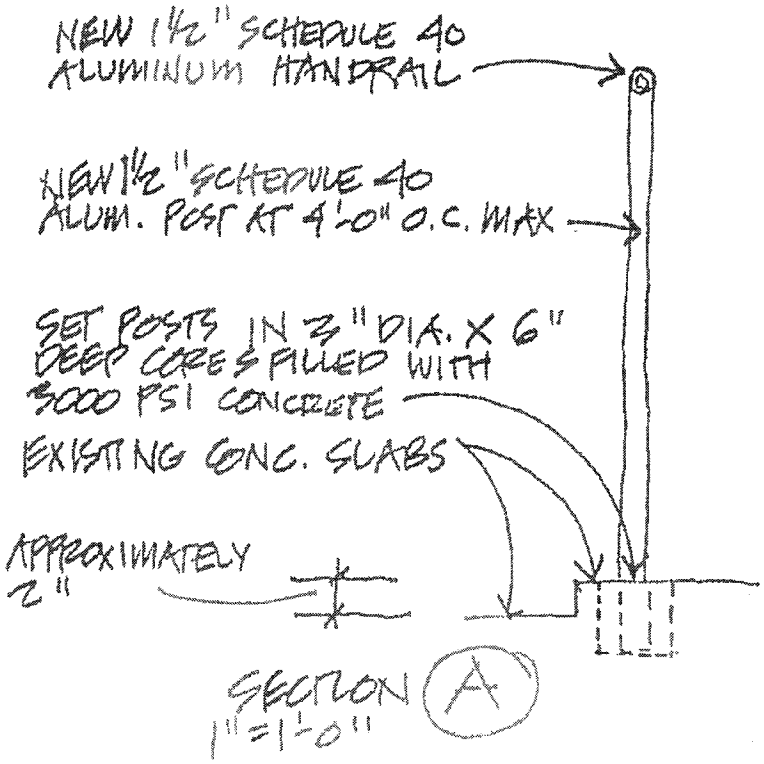

10 APRIL 2017

RPI #9 RESPONSE

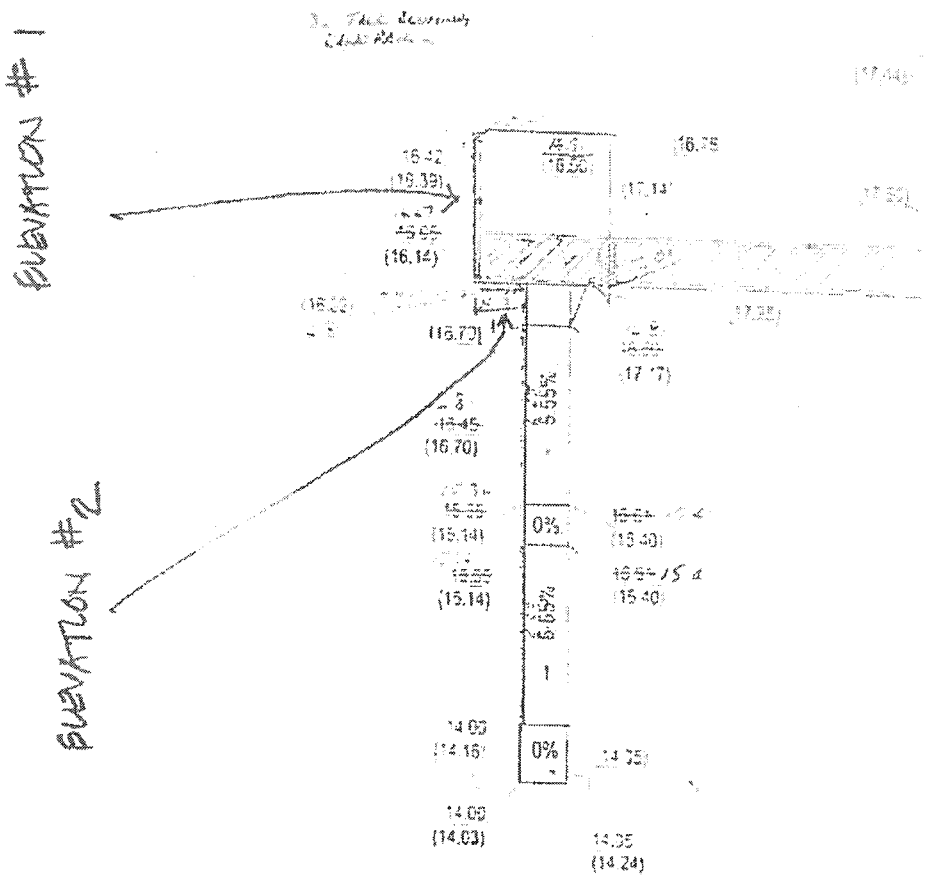

# YATES PARKING GARAGE

## Revised CHANGE ORDER REQUEST NO. 4

To furnish and install miscellaneous steel as listed below:

1. Items furnished and installed:

   Add pipe rail to existing wall panel at stairwell 1 & 2

   Lump Sum Total $ 1,150.00

2. Overhead (10%) $ 115.00

Grand Total $ 1,265.00

Time Expansion: Add 4 weeks

Submitted By

Bandele Onasanya, President
ONAS Corporation

**BRACKET WORKS** INC.

8330 RHODEN TAYLOR LANE
MAXVILLE, FL 32234
FAX 904-208-7044
PH 904-991-5118

# QUOTE # BWI17023Y

Date: September 14, 2017

To: **ONAS CORPORATION**

Job: **YATES PARKING GARAGE**
**CHANGE ORDER REQUEST**
**JACKSONVILLE, FLORIDA**

BRACKET WORKS, INC. PROPOSES TO FURNISH &/or INSTALL MISCELLANEOUS STEEL AS LISTED BELOW:

**ITEMS FURNISHED & INSTALLED**

1. ADD 1-1/2 X .125 FLAT ALUMINUM DIAMOND EXPANDED METAL POWDERCOATED WELDED TO EXISTING RAIL PANEL AT (6) BAYS AT GROUND FLOOR AREA. $ 8,832.00
2. WELD APPROX 28 L/F OF 1-1/2" X ¼" STEEL FLAT BAR TO EXISTING STEEL RAIL $ 365.00
3. ADD 2 EA 1-1/2" PIPE RAIL TO EXISTING WALL PANEL AT STAIRWELL 1 & 2 $ 1,150.00

LUMP SUM PRICE $ 10,367.00

ALL MATERIAL POWDERCOATED TO MATCH EXISTING

APPROX TIME 4-6 WEEKS

Respectfully,

Gerald R Taylor
Gerald R. Taylor, President

ACCEPTED BY: _____
PRINT NAME: _____
TITLE: _____

## Todd Pace

**From:** Williams, Maria <MariaCW@coj.net>
**Sent:** Tuesday, July 25, 2017 4:06 PM
**To:** 'Steve Flazar'; Todd Pace
**Cc:** McKnight, Thomas
**Subject:** RE: Yates Garage / COR # 4

Agree

---

**From:** Steve Flazar [mailto:sflazar@vrlarchitects.com]
**Sent:** Tuesday, July 25, 2017 4:05 PM
**To:** Williams, Maria; Todd Pace (tpace@candesconsults.com)
**Cc:** McKnight, Thomas
**Subject:** RE: Yates Garage / COR # 4

Maria:

I am in agreement with Mack. Item #3 is definitely a safety issue.

**Stephen F. Lazar, AIA, LEED AP**
**VRL Architects, Inc**
1449 Palm Avenue
Jacksonville, Florida, 32207
904 607.4197 ( Cell )
904.723.3895 ( Office )
sflazar@vrlarchitects.com

---

**From:** Williams, Maria [mailto:MariaCW@coj.net]
**Sent:** Tuesday, July 25, 2017 3:51 PM
**To:** Steve Flazar <sflazar@vrlarchitects.com>; Todd Pace (tpace@candesconsults.com) <tpace@candesconsults.com>
**Cc:** McKnight, Thomas <MCKnight@coj.net>
**Subject:** FW: Yates Garage / COR # 4

---

**From:** Blanton, Mack
**Sent:** Tuesday, July 25, 2017 3:43 PM
**To:** Williams, Maria
**Subject:** RE: Yates Garage / COR # 4

Maria- items 1, 2 and 3 are all in conformance with the building code at the time of original construction. However from a safety view addressing item 3 would be a good idea.

Mack Blanton Jr, BN, PX, LEED AP
ADA Project Manager
Disabled Services Division
City of Jacksonville
City Hall 117 W Duval St,
Suite 205

(904)630-3636
mblanton@coj.net

*Please note that under Florida's very broad public records law, email communications to and from City officials are subject to public disclosure.*

Please consider the environment - print only if necessary.

---

**From:** Williams, Maria
**Sent:** Monday, July 24, 2017 1:04 PM
**To:** Blanton, Mack
**Subject:** FW: Yates Garage / COR # 4

Mat,

Could you please take a look to see if these items need to be added as a change order to the current project?

Please let me know. Thanks, Maria

---

**From:** Steve Flazar [mailto:sflazar@vrlarchitects.com]
**Sent:** Monday, July 24, 2017 10:56 AM
**To:** Williams, Maria
**Subject:** Yates Garage / COR # 4

Maria:

The items in the attached Change Order request were items not originally in the Scope of Work. These items were brought to our attention by the C&ES reps.
Items 1 & 2 are ones that the City may get relief on since they have been there since the original construction. Item # 3 does pose a risk, however.

**Stephen F. Lazar, AIA, LEED AP**
**VRL Architects, Inc**
1449 Palm Avenue
Jacksonville, Florida, 32207
904.607.4197 ( Cell )
904.723.3895 ( Office )
sflazar@vrlarchitects.com

O N A S
Corporation

September 20, 2017

**Yates Parking Garage**

**Contract No: 7920-43**

## Change Order 5

**Furnish and Install the following Signs**

1. 1 - DO NOT ENTER
2. 1 - Accessible Parking
3. 6 - Accessible Route Signs

| | | | | |
|---|---|---|---|---|
| Materials cost per attached quote. | | | $ 262.51 | |
| Miscellaneous fasteners and drill bits | | | $ 35.00 | |
| Grout for post at street | | | $ 10.00 | |
| Generator Rental 1 - Day | | | $ 85.00 | |
| Labor to install 8 signs | Foreman | 8 Hours @ $32.00 | $ 256.00 | |
| | Labor | 8 Hours @ $25.00 | $ 200.00 | |
| | | **SUB TOTAL** | | $ **848.51** |
| | | 15% | | $ 127.28 |
| | | **Total** | | $ **975.79** |
| Sub Contract core drill for 2 signs @ street | | | $ 120.00 | |
| | | 10% | $ 12.00 | |
| | | **TOTAL COST** | | $ **1,107.79** |

Allow 10 days for delivery and installation.

Submitted By

Bandele Onasanya
President

(RD)

2050 University Blvd N * Jacksonville, FL 32211 * Office 904 745 0508 Fax 904 745 1118
www.onascorporation.com * State Certified DBE * CGC 046550 CUC 057419

FLTRANSCOR
FLORIDA TRANSCOR, INC.

# Quote

Order Number: 0059414
Order Date: 9/19/2017
Expires on: 12/19/2017

SP Code: 2000
Prepared by: Anthony Robbins
Customer Number: 00-O991605

Sold To:
Onas Corporation
2044 University Blvd. N
Jacksonville., FL 32211

Ship To:
Onas Corporation
2044 University Blvd. N.
Jacksonville, FL 32211

Email Address: bandele@onascorporation.com

Telephone: (904) 745-0508
Fax: (000) 000-0000

| Customer P.O. | Ship VIA | F.O.B. | Terms |
|---|---|---|---|
| | COUNTER | | NET 30 DAYS |

| Item Number | Unit | Ordered | Shipped | Back Order | Price | Amount |
|---|---|---|---|---|---|---|
| SNM-12X18B | EACH | 1.00 | 0.00 | 0.00 | 12.3188 | 12.32 |
| 12"x 18" Blue on White EG | | | Whse: 001 | | | |
| "Accessible Parking" ""Left Arrow"" | | | | | | |
| SNM-12X18BB | EACH | 6.00 | 0.00 | 0.00 | 12.3188 | 73.91 |
| 12"x18" Blk/Blu on White EG | | | Whse: 001 | | | |
| "Accessible Route" | | | | | | |
| SIGN0020 | EACH | 1.00 | 0.00 | 0.00 | 40.1494 | 40.15 |
| Do Not Enter R5-1 30" | | | Whse: 001 | | | |
| SP200UGV-10 | EACH | 4.00 | 0.00 | 0.00 | 28.6134 | 114.45 |
| Post U-Ch Galv 10' 2# | | | Whse: 001 | | | |
| SIGN09H | EACH | 8.00 | 0.00 | 0.00 | 0.8652 | 6.92 |
| Hwr Sign Set 2 .25" (2 NBW) | | | Whse: 001 | | | |
| AR | | | | | | |

7.00 8.0

6.92
.49
7.41

| | |
|---|---|
| Net Order: | 247.75 |
| Less Discount: | 0.00 |
| Freight: | 0.00 |
| Sales Tax: | 17.35 |
| Order Total: | 265.10 |

WE NOW OFFER CUSTOM VINYL DECALS, FLEET GRAPHICS, WINDOW PRINT FILMS, AND MORE! $202.51

Prefer Paperless Invoices? Note Email to receive to on your next payment, or send preference to AR@FLTRANSCOR.COM

1.5% FINANCE CHARGE FOR INVOICES OVER 30 DAYS. Terms & Conditions Apply. Go to fltranscor.com/content/documents/terms.pdf for more information.

6683 STUART AVENUE • JACKSONVILLE, FL 32254 • PHONE (904) 783-3302 • FAX (904) 783-0292 • AR@FLTRANSCOR.COM

BRACKET WORKS INC.

8330 RHODEN TAYLOR LANE
MAXVILLE FL 32234
FAX 904-289-7654
PH 904-591 5118

# QUOTE # BWI17015

Date: September 15, 2017

To: ONAS CORPORATION

Job: YATES PARKING GARAGE
CORE DRILLING
JACKSONVILLE, FLORIDA

ATT: IRVIN

BRACKET WORKS, INC. PROPOSES TO :

1. CORE DRILL 2 EA. HOLES FOR SIGN POST

LUMP SUM PRICE $ 120.00

ACCEPTED BY: _____
PRINT NAME: _____
TITLE: _____

Respectfully,

Gerald R Taylor
Gerald R. Taylor President

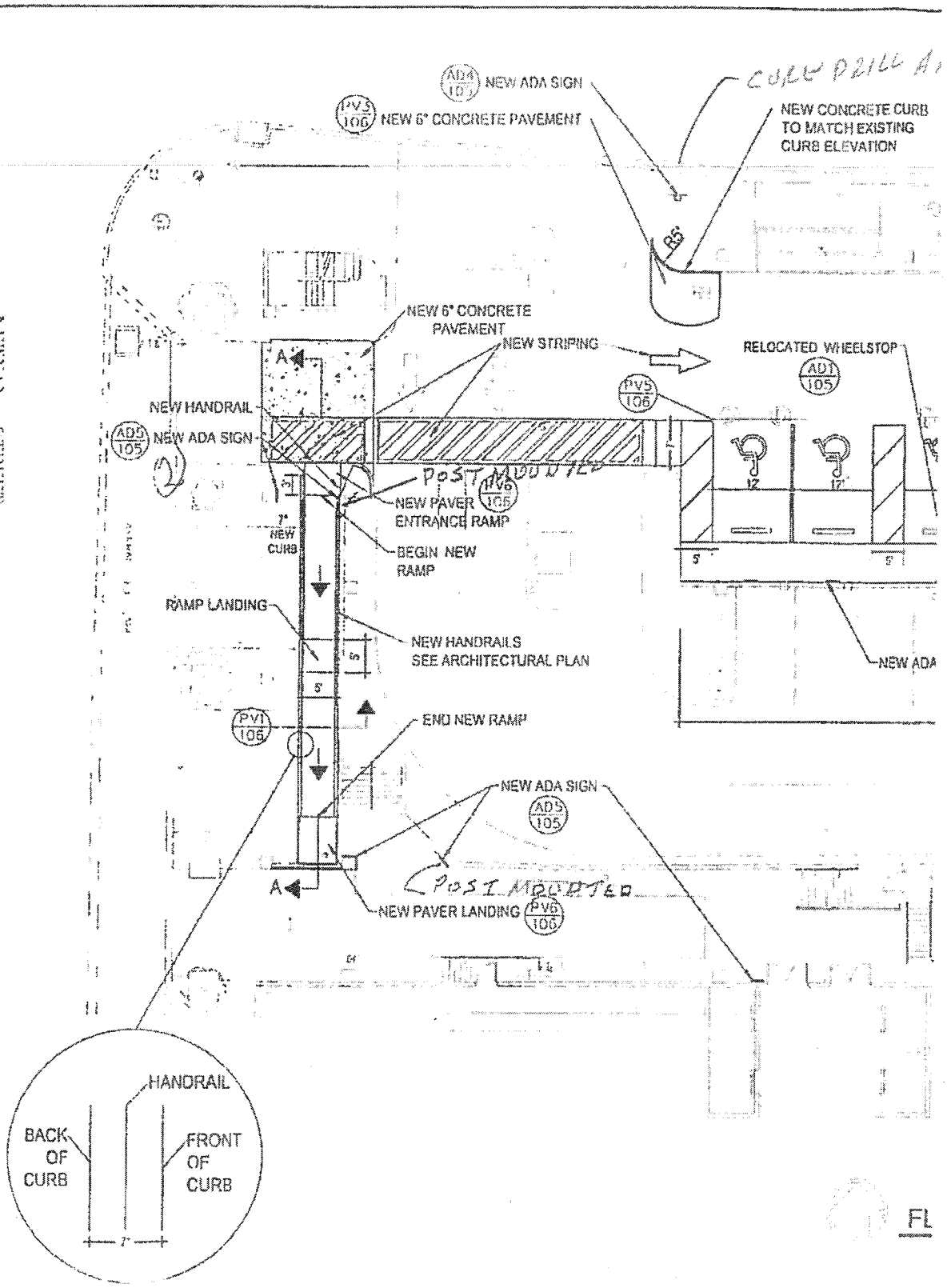


VRL Architects hereby expressly reserves the rights to this drawing and it is not to be reproduced, copied in any format or manner whatsoever without first obtaining the permission and consent of VRL Architects.

| NO. | BY | DATE | REVISIONS |
|---|---|---|---|
| | | | |

VRL Architects, Inc.

Stephen F. Lazar, AIA - Project Architect
1449 Palm Avenue
Jacksonville, Florida 32207
T (904) 723 3895
LIC NO. AAC001735

CITY OF JACKSONVILLE, FLORIDA
PUBLIC WORKS DEPARTMENT

# SIEMENS

# Progress Invoice

| Cust PO No | Cust PO Date | Quotation No | Invoice No | Date |
|---|---|---|---|---|
| Signed Proposal | 10/19/2016 | | 5444511519 | 04/10/2017 |
| Sales Order No | Sales Ord Date | Project No | Customer No | |
| 3006222219 | 10/21/2016 | 44OP-204716 | 30559386 | Page 1 of 1 |

| Bill To: | Sold To: | Ship To. |
|---|---|---|
| ONAS CORP<br>2050 UNIVERSITY BLVD N<br>JACKSONVILLE FL 32211 | ONAS CORP<br>2050 UNIVERSITY BLVD N<br>JACKSONVILLE FL 32211 | YATES BUILDING<br>231 E FORSYTH ST<br>JACKSONVILLE FL 32202 |

| Remit check payments to: | Remit Incoming Wires To: | Remit Incoming ACH's To: |
|---|---|---|
| SIEMENS INDUSTRY, INC.<br>C/O Citibank (Bldg Tech)<br>PO Box 2134<br>Carol Stream IL 60132-2134 | Citibank New York<br>111 Wall St. New York, NY 10043 USA<br>ABA# 021000089 SWIFT Code: CITIUS33<br>Account# 30824211<br>Credit Siemens Industry Inc - BT / 4433<br>Payment for Invoice # 5444511519<br>Email Detailed Remittance advice to<br>bfgarwires.us.sbt@siemens.com | Citibank New York<br>111 Wall St. New York, NY 10043 USA<br>ABA# 021000089<br>Account# 30824211<br>Credit Siemens Industry Inc - BT / 4433<br>Payment for Invoice # 5444511519<br>Email Detailed Remittance advice to<br>bfgarwires.us.sbt@siemens.com |

Delivery#:

Ship Date: | Freight Terms: Prepaid & Allow | Carrier/Route: Best Way | Tracking No:
Fed Cont #:

## Contract Summary

| | |
|---|---|
| Base Contract Amount | 11,995.00 |
| Total Extras To Date | 0.00 |
| Revised Contract Amount | 11,995.00 |
| Total Requisitions To Date | 3,800.00 |
| Payments Received | 0.00 |
| Balance Currently Unpaid | 3,800.00 |

Contact : Creamer, Jackie
Telephone : (904)464-0808
Siemens Industry, Inc.
Jacksonville Sales Office
8940 Western Way Suite 1
JACKSONVILLE FL 32256
USA

## Invoice For Work Completed

Invoice for Work Performed On The Installation Of
BFL3 SES Onas Construction / Yates Garag

| | | |
|---|---|---|
| 1. Total Work Completed To Date | 32% | 3,800.00 |
| 2. Total Retention | 0.000% | 0.00 |
| 3. Total Earned Less Retention | | 3,800.00 |
| 4. Less Prior Requisitions | | 0.00 |
| 5 Amount of Requisition (Before Tax) | | 3,800.00 |
| State Taxes | | 0.00 |
| Total Taxes | | 0.00 |

Currency: USD | Invoice Total 3,800.00

**Our preferred payment method is ACH/EFT funds transfer, followed by check submitted to our remit to address listed above. We can also accept credit card payment but ask you to set up ACH/EFT for repeat business. Our Dunn and Bradstreet # is 01-094-4650**

Payment Terms: Net Due 30 Days

Net Due By: 05/10/2017

We hereby certify these goods were produced in compliance with all applicable requirements of Sect.6,7 and 12 of the Fair Labor Standards Act as amended and regulations and orders of the United States Department of Labor issued under Sect. 14 thereof. If this invoice or packing list represents an export transaction then these commodities technology or software (items) were exported from the United States in accordance with the Export Administration Regulations. In all cases, diversion contrary to U.S. law is prohibited. These items are not to be used, directly in prohibited nuclear, chemical/biological or missile weapons activities. This is to certify that the information on this invoice or packing list is true and correct and that the contents of this shipment are as stated thereon. For shipment to California "Displays exceeding 1" include the a Waste recycle fee up to $10 per item

**SIEMENS**

Siemens Industry, Inc.

8940 Western Way Ste 1
Jacksonville, FL 32256
Phone: (904) 527-6000
Fax: (904) 464-0037

**PROJECT:** YATES BUILDING PARKING GARAGE CHANGE-ORDER

ONAS CORPORATION
2050 UNIVERSITY BLVD. N
JACKSONVILLE, FL 32211

---

August 22, 2017

Siemens Industry, Inc. (herein referred to as SIEMENS) is pleased to provide you with this price quotation for the change-order for the Yates Building Parking Garage Project.

**Change-order:**

***Original Project Cost: $11,995.00***

Siemens will provide all labor and material for the following:

- Alphone Video Entry System
- Alphone Relays and Power Supplies
- Edwards Horn Strobe and Power Supply
- Dayton Lights
- NEMA Enclosure
- Cabling
- Conduit and Back Boxes

***Deductive Change-order Amount: -$8195.00***

***New Quote Price: $3800.00***

The new quote price includes the labor time spent and the material that cannot be returned.

**Proposal Accepted:**

**Company:**
**By** _____
**Title** _____
**Date** _____

**Proposal Submitted:**

Preston Bullen
SIEMENS

**SIEMENS**
**By:** Preston Bullen
**Title:** **Sales Executive**
**Date:** **8/22/17**

**SIEMENS**

Siemens Industry, Inc.

8940 Western Way Ste 1
Jacksonville, FL 32256
Phone: (904) 527-6000
Fax: (904) 464-0037

**Payment Terms:**

**Payment Terms Acceptance Agreement**

The total price of: $3,800.00 and the estimated return on investment are based on the items outlined in this proposal. ANY statements made herein regarding savings that may be achieved by implementing the services offered in this proposal are estimates only. No warranty, either expressed or implied, shall be construed to arise from such statements, nor shall such statements be construed as constituting a guarantee by Siemens that such savings will occur if the services are implemented.

**Terms and Conditions Disclaimer**

The Customer acknowledges that when approved by the Customer and accepted by Siemens Industry, Inc.: (i) the Proposal and the Contract Terms and Conditions, (together with any other documents incorporated into the forgoing) shall constitute the entire agreement of the parties with respect to its subject matter (collectively, hereinafter referred to as the "Agreement") and (ii) in the event of any conflict between the terms and conditions of the Proposal and the terms and conditions of The Contract Terms and Conditions, the Contract Terms and Conditions shall control.

BY EXECUTION HEREOF, THE SIGNER CERTIFIES THAT (S)HE HAS READ ALL OF THE TERMS AND CONDITIONS AND DOCUMENTS, THAT SIEMENS OR ITS REPRESENTATIVES HAVE MADE NO AGREEMENTS OR REPRESENTATIONS EXCEPT AS SET FORTH THEREIN, AND THAT (S)HE IS DULY AUTHORIZED TO EXECUTE THE SIGNATURE PAGE ON BEHALF OF THE CUSTOMER.

*This Proposal is based on the Siemens Industry, Inc. Standard Terms and Conditions and the "Scope of Work" and are to be considered part of this proposal.*

***Payment is due upon receipt.***

***Total: $3,800.00***

# SIEMENS

Siemens Industry, Inc.

8940 Western Way Ste 1
Jacksonville, FL 32256
(904) 527-6000
Fax (904) 464-0037

## TERMS AND CONDITIONS OF SALE

These Terms and Conditions are incorporated by reference and form an integral part of each proposal or agreement between Siemens Industries, Inc. ("SIEMENS") and the party for whom the Work is to be performed ("CLIENT"). The portions of each proposal or agreement relating to "Scope of Work" or "Proposed Solution" (in either case "Scope"), together with these Terms and Conditions, are collectively referred to as the "Agreement".

**Article 1: General**

1.1 (a) The Agreement, when accepted in writing by CLIENT and approved by an authorized representative of SIEMENS, constitutes the entire, complete and exclusive agreement between the parties relating to the services ("Services") and the equipment ("Equipment") to be provided by SIEMENS as described in the Scope (such Services and Equipment collectively referred to as "Work") and shall supersede and cancel all prior agreements and understandings, written or oral, relating to the subject matter of the Agreement. The Agreement and any rights or obligations thereunder may not be assigned by either party without the prior written consent of the other, except that either party may assign this Agreement to its affiliates and SIEMENS may use subcontractors in the performance of the Work.

(b) The terms and conditions of this Agreement shall not be modified or rescinded except in writing, signed by a corporate officer of SIEMENS. SIEMENS' performance under this Agreement is expressly conditioned on CLIENTS assenting to all of the terms of this Agreement, notwithstanding any different or additional terms contained in any writing at any time submitted or to be submitted to SIEMENS by CLIENT relating to the Work.

c) The terms and conditions set forth herein shall supersede, govern and control any conflicting terms of the Proposed Solution or the Proposal.

d) Nothing contained in this Agreement shall be construed to give any rights or benefits to anyone other than the CLIENT and SIEMENS without the express written consent of both parties. All obligations arising prior to this Agreement and all provisions of this Agreement allocating responsibility or liability between the parties shall survive the completion of the Work and the termination of this Agreement.

1.2 This Agreement shall be governed by and enforced in accordance with the laws of the State of Illinois. All claims or disputes arising under this Agreement shall be litigated in the State, Commonwealth, or Province in which Services are being provided to CLIENT hereunder.

**Article 2: Work by SIEMENS**

2.1 SIEMENS will perform the Work expressly described in this Agreement and in any work release documents or change orders that are issued under this Agreement and signed by the parties. The Work performed by SIEMENS shall be conducted in a manner consistent with the degree of care and skill ordinarily exercised by reputable firms performing the same or similar Work in the same locale acting under similar circumstances and conditions.

2.2 SIEMENS shall perform the Work during its normal working hours, Monday through Friday, excluding holidays, unless otherwise agreed herein.

2.3 SIEMENS is not required to conduct safety or other tests, install new devices or equipment or make modifications to any Equipment beyond the Scope set forth in this Agreement. Any CLIENT request to change the Scope or the nature of the Work must be in the form of a mutually agreed change order, effective only when executed by all parties hereto.

2.4 All reports and drawings specifically prepared for and deliverable to CLIENT pursuant to this Agreement ("Deliverables") shall become CLIENTS property upon full payment to SIEMENS. SIEMENS may retain file copies of such deliverables. All other reports, notes, calculations, data, drawings, estimates, specifications, manuals, other documents and all computer programs, codes and computerized materials prepared by or for SIEMENS are instruments of SIEMENS' work ("Instruments") and shall remain SIEMENS' property. To the extent specified in the Scope, CLIENT, its employees and agents ("Permitted Users") shall have a right to make and retain copies of Instruments except uncompiled code, and to use all Instruments, provided however, the Instruments shall not be used or relied upon by any parties other than Permitted Users, and such use shall be limited to the particular project and location for which the Instruments were provided. All Deliverables and Instruments provided to CLIENT are for Permitted Users' use only for the purposes disclosed to SIEMENS, and CLIENT shall not transfer them to others or use them or permit them to be used for any extension of the Work or any other project or purpose, without SIEMENS' express written consent. Any reuse of Deliverables or Instruments for other projects or locations without the written consent of SIEMENS, or use by any party other than Permitted Users will be at Permitted Users' risk and without liability to SIEMENS, and CLIENT shall indemnify, defend and hold SIEMENS harmless from any claims, losses or damages arising therefrom.

2.5 SIEMENS shall be responsible for any portion of the Work performed by any subcontractor of SIEMENS. SIEMENS shall not have any responsibility, duty or authority to direct, supervise or oversee any contractors of CLIENT or their work or to provide the means, methods or sequence of their work or to stop their work. SIEMENS' work and/or presence at a site shall not relieve others of their responsibility to CLIENT or to others. SIEMENS shall not be liable for the failure of CLIENTS contractors or others to fulfill their responsibilities, and CLIENT agrees to indemnify, hold harmless and defend SIEMENS against any claims arising out of such failures.

**Article 3: Responsibilities of CLIENT**

3.1 CLIENT, without cost to SIEMENS, shall

(a) Designate a contact person with authority to make decisions for CLIENT regarding the Work and provide SIEMENS with information sufficient to contact such person in an emergency. If such representative cannot be reached, any request for work received from a person located at CLIENT'S premises will be deemed authorized by CLIENT, and SIEMENS will, in its discretion, act accordingly.

(b) Provide or arrange for reasonable access and make all provisions for SIEMENS to enter any site where Work is to be performed;

(c) Permit SIEMENS to control and/or operate all facility controls, systems, apparatus, equipment and machinery necessary to perform the Work;

(d) Furnish SIEMENS with all available information pertinent to the Work;

(e) Furnish SIEMENS with all approvals, permits and consents from government authorities and others as may be required for performance of the Work except for those SIEMENS has expressly agreed in writing to obtain;

(f) Notify SIEMENS promptly of any site conditions requiring special care, and provide SIEMENS with any available documents describing the quantity, nature, location and extent of such conditions;

(g) Comply with all laws and provide any notices required to be given to any government authorities in connection with the Work, except such notices SIEMENS has expressly agreed in writing to give,

(h) Provide SIEMENS with Material Safety Data Sheets that conform to OSHA requirements related to all Hazardous Materials located at the site;

(i) Furnish to SIEMENS any contingency plans related to the site; and

(j) Furnish the specified operating environment, including without limitation, suitable, clean, stable, properly conditioned electrical power to all Equipment; telephone lines, capacity and connectivity as required by such Equipment; and heat, light, air conditioning and other utilities in accordance with the specifications for the Equipment.

3.2 CLIENT acknowledges that the technical and pricing information contained in this Agreement is confidential and proprietary to SIEMENS and agrees not to disclose it or otherwise make it available to others without SIEMENS' express written consent.

3.3 CLIENT acknowledges that it is now and shall at all times remain in control of the project site. Except as expressly provided herein, SIEMENS shall not be responsible for the adequacy of the health or safety programs or precautions related to CLIENTS activities or operations, CLIENTS other contractors, the work of any other person or entity, or CLIENTS site conditions. SIEMENS is not responsible for inspecting, observing, reporting or correcting health or safety conditions or deficiencies of CLIENT or others at CLIENTS site. So as not to discourage SIEMENS from voluntarily addressing health or safety issues at CLIENTS site, in the event SIEMENS does address such issues by making observations, reports, suggestions or otherwise, SIEMENS shall not be liable or responsible on account thereof.

3.4 CLIENT is solely responsible for any removal, replacement or refinishing of the building structure or finishes that may be required to gain access to the Work.

3.5 CLIENT shall properly dispose of all ballasts, mercury bulb thermostats, used oil, contaminated filters, contaminated absorbents, refrigerant and any other Hazardous Materials that at any time are present at CLIENTS premises, in accordance with all applicable federal, state, and local laws, regulations, and ordinances.

**Article 4. Changes; Delays; Excused Performance**

4.1 As the Work is performed, conditions may change or circumstances outside SIEMENS' reasonable control (including changes of law) may develop which would require SIEMENS to expend additional costs, effort or time to complete the Work, in which case SIEMENS will notify CLIENT and an equitable adjustment will be made to SIEMENS' compensation and time for performance. In the event conditions or circumstances require the Work to be suspended or terminated, SIEMENS shall be compensated for Work performed and for costs reasonable incurred in connection with the suspension or termination.

4.2 SIEMENS shall not be responsible for loss, delay, injury damage or failure of performance that may be caused by circumstances beyond its control, including but not

restricted to acts or omissions by CLIENT or its employees, agents or contractors, Acts of God, war, civil commotion, acts or omissions of government authorities, fire, theft, corrosion, flood, water damage, lightning, freeze-ups, strikes, lockouts, differences with workmen, riots, explosions, quarantine restrictions, delays in transportation, or shortage of vehicles, fuel, labor or materials. In the event of such delay or failure, the time for performance shall be extended by a period equal to the time lost plus a reasonable recovery period and the compensation shall be equitably adjusted for additional costs SIEMENS incurs due to such delay.

**Article 5: Compensation**

**5.1** Unless otherwise agreed in writing, SIEMENS shall be compensated for the Work at its prevailing rates and reimbursed for costs and expenses (plus reasonable profit and overhead) incurred in its performance of the Work.

**5.2** SIEMENS may invoice CLIENT on a monthly or other progress billing basis. Invoices are due and payable upon receipt or as otherwise set forth in the Agreement. If any payment is not received when due, SIEMENS may deem CLIENT to be in breach hereof and may enforce any remedies available to it hereunder or at law, including without limitation, acceleration of payments and suspension or termination of the Work at any time and without notice and shall be entitled to compensation for the Work previously performed and for costs reasonably incurred in connection with the suspension or termination. Any amount not paid within sixty (60) days of the date due shall accrue interest from the date due, until paid, at the rate of ten percent (10%) per annum. CLIENT shall reimburse SIEMENS for SIEMENS' costs and expenses (including reasonable attorneys' and witnesses' fees) incurred for collection under this Agreement. In the event of a dispute by CLIENT regarding any portion or all of an invoiced amount, it shall notify SIEMENS in writing of the amount in dispute and the reason for its disagreement within 21 days of receipt of the invoice, the undisputed portion shall be paid when due, and interest on the disputed unpaid portion shall accrue as aforesaid, from the date due until the date of payment, to the extent that such amounts are finally determined to be payable to SIEMENS.

**5.3** Except to the extent expressly agreed in writing, SIEMENS' fees do not include any taxes, excises, fees, duties or other government charges related to the Work, and CLIENT shall pay such amounts or reimburse SIEMENS for any amounts it pays. If CLIENT claims a tax exemption or direct payment permit, it shall provide SIEMENS with a valid exemption certificate or permit and indemnify, defend and hold SIEMENS harmless from any taxes, costs and penalties arising out of same.

**Article 6: Warranty, Insurance and Allocation of Risk 6.1**

(a) Until one year from either the date the Equipment is installed or the date of first beneficial use, whichever first occurs, all Equipment manufactured by SIEMENS or bearing its nameplate will be free from defects in material and workmanship arising from normal use and service.

(b) Labor for all Services under this Agreement is warranted to be free from defects for one year after the earlier of the date the Services are substantially completed or the date of first beneficial use.

(c) Equipment will not fail to function because of errors in processing, providing or receiving date or time data involving dates between January 1, 1999 and March 31, 2001, provided other products and software, including the computer workstation, with which the system interacts properly exchange date and time data with the system.

**6.2** (a) The limited warranties set forth in Section 6.1 will be void as to, and shall not apply to any Work (i) repaired, altered or improperly installed by any person other than SIEMENS or its authorized representative; (ii) subjected to unreasonable or improper use or storage, used beyond rated conditions, operated other than per SIEMENS' or the manufacturer's instructions, or otherwise subjected to improper maintenance, negligence or accident; (iii) damaged because of any use of the Work after CLIENT has, or should have, knowledge of any defect in the Work; or (iv) Equipment not manufactured, fabricated and assembled by SIEMENS or not bearing SIEMENS' nameplate. However, SIEMENS assigns to CLIENT, without recourse, any and all assignable warranties available from any manufacturer, supplier, or subcontractor of such Equipment and will assist CLIENT in enforcement of such assigned warranties.

(b) Any claim under the limited warranty granted above must be made in writing to SIEMENS within thirty (30) days after discovery of the claimed defect, or with respect only to the warranty set forth in Subsection 4.1(c) prior to April 1, 2001, unless discovered directly by SIEMENS. Such limited warranty only extends to CLIENT and not to any subsequent owner of the Equipment. CLIENTS sole and exclusive remedy for any Equipment or Services not conforming with this limited warranty is limited to, at SIEMENS' option, (i) repair or replacement of defective components of covered Equipment, or (ii) reperformance of the defective portion of the Services, or (iii) to the extent previously paid, the issuance of a credit or refund for the original purchase price of such defective component or portion of the Equipment or Services.

(c) SIEMENS shall not be required to repair or replace more than the component(s) of the Equipment actually found to be defective. SIEMENS' warranty liability shall not exceed the purchase price of such item. Repaired or replaced Equipment will be warranted hereunder only for the remaining portion of the original warranty period.

**6.3** THE EXPRESS LIMITED WARRANTIES PROVIDED ABOVE ARE IN LIEU OF AND EXCLUDE ALL OTHER WARRANTIES, STATUTORY, EXPRESS OR IMPLIED, INCLUDING WITHOUT LIMITATION ANY WARRANTY OF MERCHANTABILITY OR FITNESS FOR A PARTICULAR PURPOSE, WHICH ARE HEREBY EXPRESSLY DISCLAIMED. SIEMENS MAKES NO WARRANTY, EXPRESS OR IMPLIED, THAT ANY EQUIPMENT PROVIDED HEREUNDER WILL PREVENT ANY LOSS, OR WILL IN ALL CASES PROVIDE THE PROTECTION FOR WHICH IT IS INSTALLED OR INTENDED. THE LIMITED EXPRESS WARRANTIES AND REPRESENTATIONS SET FORTH IN THIS AGREEMENT MAY ONLY BE MODIFIED OR SUPPLEMENTED IN A WRITING SIGNED BY A DULY AUTHORIZED CORPORATE OFFICER OF SIEMENS.

**6.4** SIEMENS shall maintain the following insurance while performing the Work:

| | |
|---|---|
| Workers' Compensation | Statutory |
| Employers' Liability | $1,000,000 each accident |
| Commercial General Liability | $1,000,000 per occurrence and $5,000,000 in the aggregate |
| Automobile Liability | $1,000,000 per occurrence/aggregate |

**6.5** Risk of loss of materials and Equipment furnished by SIEMENS shall pass to CLIENT upon delivery to CLIENT'S premises, and CLIENT shall be responsible for protecting and insuring them against theft and damage. However, until SIEMENS is paid in full, SIEMENS shall retain title for security purposes only and the right to repossess the materials and Equipment.

**6.6** SIEMENS will indemnify CLIENT from and against losses, claims, expenses and damages (including reasonable attorney's fees) for personal injury or physical damage to property, but not loss of use of the property resulting from such damage or from damage to any work performed hereunder. Such indemnification shall be solely to the extent caused by or arising directly from SIEMENS' or its employees', consultants' or agents' negligent acts or omissions or willful misconduct in connection with its performance of Services hereunder. SIEMENS' obligations under this indemnity provision shall not extend to claims, losses, expenses and damages arising out of or in any way attributable to the negligence of CLIENT or its agents, consultants or employees other than SIEMENS. SIEMENS' liability to CLIENT or any third party under this Section 6.6 or otherwise under the Agreement is expressly limited to, and SIEMENS shall not be liable other than for the direct losses, claims, expenses and damages arising as aforesaid. Neither party shall in any event be responsible under this Agreement for incidental, consequential, punitive, exemplary or special damages, including without limitation lost profits and/or lost business opportunities, whether arising in warranty, late or non-delivery of any Work, tort, contract or strict liability, and regardless of whether SIEMENS has been advised of the possibility of such damages. SIEMENS reserves the right to control the defense and settlement of any claim for which SIEMENS has an obligation to indemnify hereunder. The parties acknowledge that the price which SIEMENS has agreed to perform its Work and obligations under this Agreement is calculated based upon the foregoing limitations of liability, and that SIEMENS has expressly relied on, and would not have entered into this Agreement but for such limitations of liability.

**Article 7: Hazardous Materials Provisions**

**7.1** The Work does not include directly or indirectly performing or arranging for the detection, monitoring, handling, storage, removal, transportation, disposal or treatment of Oil or Hazardous Materials. Except as disclosed pursuant to Section 7.3, CLIENT represents that there is no asbestos or any other hazardous or toxic materials, as defined in the Comprehensive Environmental Response, Compensation and Liability Act of 1980, as amended, the regulations promulgated thereunder, and other applicable federal, state or local law ("Hazardous Materials"), present at CLIENTS locations where Services are performed. SIEMENS will notify CLIENT immediately if it discovers or suspects the presence of any Hazardous Material. All Services have been priced and agreed to by SIEMENS in reliance on CLIENTS representations as set forth in this Section 7.1. The presence of Hazardous Materials constitutes a change in the Proposed Solution equivalent to a change order whose terms must be agreed to by SIEMENS before its obligations hereunder will continue.

**7.2** CLIENT shall be solely responsible for testing, abating, encapsulating, removing, remedying or neutralizing such Hazardous Materials, and for the costs thereof. Even if an appropriate change order has been entered into pursuant to Section 7.1 above, SIEMENS will continue to have the right to stop providing Services until the job site is free from Hazardous Materials. In such event, SIEMENS will receive an equitable extension of time to complete its Services, and compensation for delays caused by Hazardous Materials remediation. In no event shall SIEMENS be required or construed to take title, ownership or responsibility for such Oil or Hazardous Materials. CLIENT shall sign any required waste manifests in conformance with all government regulations, listing CLIENT as the generator of the waste.

**7.3** CLIENT warrants that, prior to the execution of the Agreement, it has notified SIEMENS in writing of any and all Hazardous Materials present, potentially present or likely to become present at CLIENTS locations and has provided a copy of any jobsite safety policies, including but not limited to lock-out and tag procedures, laboratory procedures, chemical hygiene plan, material safety data sheets or other items covered or required to be disclosed or maintained by federal, state, or local laws, regulations or ordinances.

**7.4** For separate consideration of $10 and other good and valuable consideration, the receipt and adequacy of which are hereby acknowledge, CLIENT shall indemnify, defend and hold SIEMENS harmless from and against any damages, losses, costs, liabilities or expenses (including attorneys' fees) arising out of any Oil or Hazardous Materials or from CLIENTS breach of, or failure to perform its obligations under Sections 7.1, 7.2 or 7.3.

**SIEMENS**

# Work Order
## Building Services

| Requested by: | Phone: | Date Received: 9/25/17 | Scheduled Date: | Job Number: | Work Order |
|---|---|---|---|---|---|

Customer Site: Yates Parking Garage
City of Jacksonville
Public Works

Report to:

Bill to: 440P - 204716

Call Type:

Equip/System Serviced:

Delivery Mode: ☒ On Site ☐ On line

Instructions/Problem Description:

☐ Technical Support Program
☐ Warranty
☐ Billable

Service Report:
Delivery of Alphone JP Series System & Power Supply
equipment that was purchased that cannot be returable
Delivered to Yates Parking Garage / City of Jacksonville Public Works
Yman Bayk

☐ Call Completed/ Problem Resolved
☐ Call Incomplete

☐ Refrigerant Usage Document No.: _____

☐ Site Log Updated
☐ Back Up Made

☐ Recommendation:

☐ Follow Up Required:

| Stock Location | Description of Materials Used | Product No. / P.O. | Qty | Unit Price | Total Price | Discount | Net Amount |
|---|---|---|---|---|---|---|---|
| | | | | | | | |
| | | | | | | | |
| | | | | | | | |
| | | | | | | | |
| | | | | | | | |

| Date | Employee | Hours Reg. | Hours O.T. | Expenses Mileage | Expenses Parking | Expenses Other |
|---|---|---|---|---|---|---|
| | | | | | | |
| | | | | | | |
| | | | | | | |
| | | | | | | |
| | | | | | | |

Total Material $

Labor:
___ Reg. Hours @ _____ = _____
___ O.T. Hours @ _____ = _____
___ _____ @ _____ = _____

Total Labor $

****************** For Office Use Only ************************

Branch _____ Customer No. _____ Customer P.O. No _____

Billing Instructions - Invoice will read:
☐ "Labor, material and expense in performance of service work"
☐ _____

Expenses:
Mileage: _____ @ _____ = _____
Parking: _____ @ _____ = _____
Other: _____ @ _____ = _____

Total Expense $

Subtotal $

Sales Tax $

Total Billing $

Invoice No.: _____ Invoice Date: _____

Customer Signature / Date: Yman Bayk 9/25/17

Employee Signature / Date

JOB FILE

SUBJECT: **YATES BLDG PARKING GARAGE- ACCESSIBILITY IMPROVEMENTS**

**BID# CF-0142-16** OPEN DATE: **2016-07-20**

## GENERAL GOVERNMENT AWARDS COMMITTEE

KIND AND BASIS OF CONTRACT:
**CONSTRUCTION FIXED**

AGENCY: **PUBLIC WORKS**

BASIS OF AWARD: **TOTAL LUMP SUM BASE BID- LOWEST RESPONSIVE, RESPONSIBLE BIDDER**

NUMBER OF BIDS INVITED 4 NUMBER RECEIVED 4 OTHER 0

**SUMMARY OF BIDS AND RECOMMENDED ACTIONS:**

Recommend approval to grant permission from Hager Construction Company, Inc., to withdraw their bid proposal per email dated July 27, 2016.

Recommend approval to award to the lowest responsive, responsible bidder Onas Corporation, in the total lump sum base bid amount of $438,000.00.

This award to be funded by account: PWCP32EPB519-069505-PW0755-01 to be executed by formal contract through Office of General Counsel.

Attachments: Recommendation Memo, Bid Tabsheet, Vendor withdrawal Email, Basis of Award, Scope of Work

BUYER: Marilyn Laidler
MARILYN LAIDLER

RESPECTFULLY SUBMITTED: _____
GREGORY PEASE, CHIEF
PROCUREMENT DIVISION

CONCURRENCE BY: **Tom Fallin, P.E., Chief, Engineering and Construction Management Division**

---

**(ALL AWARD ACTIONS SUBJECT TO LAWFULLY APPROPRIATED FUNDS)**

ACTION OF GGAC COMMITTEE ON RECOMMENDATIONS ABOVE

MEMBERS APPROVING 3 MEMBERS DISAPPROVING Ø DATE: 9-15-16

OTHER: _____

---

ACTION OF AWARDING AUTHORITY DATE: 9/15/16

APPROVED ✓ DISAPPROVED _____

OTHER _____

SIGNATURE OF AUTHENTICATION _____

Sam E. Mousa
Chief Administrative Officer
For Mayor Lenny Curry
Pursuant to Authority of:
Executive Order No. 2015-05

FORM GB-108, Revised 12/2007

FISCAL MO/YEAR : 02 2018 CURRENCY CODE :
INDEX CODE : PWCP32EPB519 PW PUBLIC BLDGS CAPITAL PROJECTS (F5190)
SUBOBJECT : 069505 DM-OTHER CONSTRUCTION COSTS
PROJECT : PW0755 ADA COMPLIANCE
PROJECT DETAIL : 01 ADA COMPLIANCE-PUBLIC BUILDINGS
GRANT :
GRANT DETAIL :
USER CODE :

| S | NOV 2017 | ANNUAL BALANCE | ALL YEARS BALANCE |
|---|---|---|---|
| ESTIMATED REVENUES | .00 | .00 | .00 |
| REVENUES | .00 | .00 | .00 |
| UNREALIZED REVENUES | .00 | .00 | .00 |
| BUDGET | .00 | 2,600,000.00 | 5,100,000.00 |
| EXPENDITURES | 76,485.88 | 76,485.88 | 2,421,551.94 |
| ENCUMBRANCES | -18,464.01 | -32,912.81 | 137,767.84 |
| PRE-ENCUMBRANCES | -65,546.87 | 63,375.00 | 63,375.00 |
| REMAINING BALANCE | 7,525.00 | 2,493,051.93 | 2,477,305.22 |

F1-HELP F2-SELECT F4-PRIOR F5-NEXT
F9-LINK F10-PRIOR-MO F11-NEXT-MO

G005 - PRIOR RECORD DISPLAYED

**CF-0142-16** Onas Corporation

| | | |
|---|---|---|
| 9/15/2016 | $438,000.00 | Award |
| Pending | $10,544.94 | Increase |
| | | |
| | | |
| | | |
| | | |

**$448,544.94 Total Award**