6

SUBJECT: PIGGYBACK BUY BOARD PROPOSAL 631-20 WITH TOM BARROW COMPANY

BID #: PSC-0412-23 **OPEN DATE:** N/A

GENERAL GOVERNMENT AWARDS COMMITTEE

KIND AND BASIS OF CONTRACT: PIGGYBACK CONTRACT – DATE OF AWARD THROUGH NOVEMBER 30, 2023

AGENCY: FLEET MANAGEMENT

BASIS OF AWARD: PIGGYBACK CONTRACT

NUMBER OF BIDS INVITED: N/A **NUMBER RECEIVED:** N/A **OTHER:** N/A

SUMMARY OF BIDS AND RECOMMENDED ACTIONS:
Recommend approval to piggyback off Buy Board Proposal 631-20 with Tom Barrow Company, for the purchase of HVAC equipment, supplies, and installation of HVAC equipment. Estimated annual expenditure amount not-to-exceed $106,080.00. Period of service will be from date of award through November 30, 2023.

Funding shall be encumbered from account 51101.114005.564290.000000.00000000.00000.0000000 - executed by Purchase Order(s).

ATTACHMENTS: Recommendation Memo; Risk Management Approval, Supplier Quote, Piggyback RFP & Contract

ANALYST: _____ Corey Sidlo

RESPECTFULLY SUBMITTED: _____ FOR: DUSTIN FREEMAN, CHIEF PROCUREMENT DIVISION

CONCURRENCE BY: CRIS TONGOL, CHIEF, FLEET MANAGEMENT

(ALL AWARD ACTIONS SUBJECT TO LAWFULLY APPROPRIATED FUNDS)
ACTION OF GGAC COMMITTEE ON RECOMMENDATIONS ABOVE

MEMBERS APPROVING _____ MEMBERS DISAPPROVING _____ DATE: _____

_____ _____ OTHER: _____

_____ _____

_____ _____

ACTION OF AWARDING AUTHORITY DATE _____

APPROVED _____ DISAPPROVED _____

OTHER _____

SIGNATURE OF AUTHENTICATION _____

FINANCE AND ADMINSTRATION DEPARTMENT

FLEET MANAGEMENT DIVISION

Jacksonville

Where Florida Begins.

Date: June 21, 2023

To: Dustin Freeman, Chief of Procurement Division

From: Cris Tongol, Chief of Fleet Management

Re: Request Approval to Piggyback Buy Board Proposal 631-20 with Tom Barrow Company for HVAC Equipment, Supplies and Installation of HVAC Equipment

Fleet Management is requesting approval to piggyback Buy Board proposal 631-20 for HVAC Equipment, Supplies, and Installation of HVAC equipment. Period of Service is Date of Award through November 30, 2023. Estimated amount of expenditure is $106,080.00.

Funding Source: 51101.114005.564290.000000.00000000.00000.0000000

2581 Commonwealth Ave. Jacksonville, FL 32254 Phone: 904.255-7499 Fax: 904.381.4607 www.coj.net

Sidlo, Corey

Subject: FW: Concluded RE: Piggyback Buy Board Proposal 631-20 Big Ass Fans
Attachments: Insurance Indemnification_.docx

From: Flynn, Tracy <TFlynn@coj.net> **On Behalf Of** RiskReview
Sent: Tuesday, June 20, 2023 12:07 PM
To: Kurtz, Sheryl <SKURTZ@coj.net>; RiskReview <RiskReview@coj.net>
Cc: Collier, Kevin <CKevin@coj.net>; Sidlo, Corey <CSidlo@coj.net>
Subject: Concluded RE: Piggyback Buy Board Proposal 631-20 Big Ass Fans

Hi Sheryl,

This has been reviewed by Risk Management and is approved.

Regards,

Tracy A. Flynn
Chief of Risk Management
Finance and Administration Department
City of Jacksonville
117 W. Duval St., Suite 335
Jacksonville, FL 32202-3381
tflynn@coj.net
P: 904-255-5310
C :904-465-3517

Please note that under Florida's very broad public records law, email communications to and from City officials are subject to public disclosure.

From: Kurtz, Sheryl <SKURTZ@coj.net>
Sent: Tuesday, June 13, 2023 11:50 AM
To: RiskReview <RiskReview@coj.net>
Cc: Collier, Kevin <CKevin@coj.net>; Sidlo, Corey <CSidlo@coj.net>
Subject: RE: Piggyback Buy Board Proposal 631-20 Big Ass Fans

I spoke with Procurement, these are the insurance and indemnification language requirements. The require approval from Risk Management prior to submitted to the General Government award's committee.

Thank you,

Sheryl Kurtz
Equipment Procurement Coordinator
Fleet Management Division
904-255-7465
skurtz@coj.net

From: Flynn, Tracy <TFlynn@coj.net> **On Behalf Of** RiskReview
Sent: Tuesday, June 13, 2023 10:37 AM

To: Kurtz, Sheryl <SKURTZ@coj.net>; RiskReview <RiskReview@coj.net>
Cc: Collier, Kevin <CKevin@coj.net>
Subject: RE: Piggyback Buy Board Proposal 631-20 Big Ass Fans

Hi Sheryl,

This should go to procurement first. They will attach insurance and indemnification language into the contract.

Tracy A. Flynn
Chief of Risk Management
Finance and Administration Department
City of Jacksonville
117 W. Duval St., Suite 335
Jacksonville, FL 32202-3381
tflynn@coj.net
P: 904-255-5310
C :904-465-3517

Please note that under Florida's very broad public records law, email communications to and from City officials are subject to public disclosure.

From: Kurtz, Sheryl <SKURTZ@coj.net>
Sent: Monday, June 12, 2023 12:47 PM
To: RiskReview <RiskReview@coj.net>
Subject: Piggyback Buy Board Proposal 631-20 Big Ass Fans

Please review for approval to piggyback Proposal 631-20 with Buyboard purchasing cooperative – vendor Big Ass Fans.

Thank you,

Sheryl Kurtz
Equipment Procurement Coordinator
Fleet Management Division
904-255-7465
skurtz@coj.net

CERTIFICATE OF LIABILITY INSURANCE

DATE (MM/DD/YYYY): 06/08/2023

THIS CERTIFICATE IS ISSUED AS A MATTER OF INFORMATION ONLY AND CONFERS NO RIGHTS UPON THE CERTIFICATE HOLDER. THIS CERTIFICATE DOES NOT AFFIRMATIVELY OR NEGATIVELY AMEND, EXTEND OR ALTER THE COVERAGE AFFORDED BY THE POLICIES BELOW. THIS CERTIFICATE OF INSURANCE DOES NOT CONSTITUTE A CONTRACT BETWEEN THE ISSUING INSURER(S), AUTHORIZED REPRESENTATIVE OR PRODUCER, AND THE CERTIFICATE HOLDER.

IMPORTANT: If the certificate holder is an ADDITIONAL INSURED, the policy(ies) must have ADDITIONAL INSURED provisions or be endorsed. If SUBROGATION IS WAIVED, subject to the terms and conditions of the policy, certain policies may require an endorsement. A statement on this certificate does not confer rights to the certificate holder in lieu of such endorsement(s).

PRODUCER
Relation Insurance, Inc.
5825 Medlock Bridge Parkway
Johns Creek GA 30022

CONTACT NAME: Kim Langley
PHONE (A/C, No, Ext): (678) 740-0241 FAX (A/C, No): (678) 740-0241
E-MAIL ADDRESS: kim.langley@relationinsurance.com

INSURER(S) AFFORDING COVERAGE	NAIC #
INSURER A: Graphic Arts Mutual Ins. Co.	25984
INSURER B: Federal Insurance Company	20281
INSURER C:	
INSURER D:	
INSURER E:	
INSURER F:	

INSURED
Tom Barrow Company
732 Joseph E Lowery Blvd. NW
Atlanta GA 30318

COVERAGES **CERTIFICATE NUMBER:** 2022-23 FL COI **REVISION NUMBER:**

THIS IS TO CERTIFY THAT THE POLICIES OF INSURANCE LISTED BELOW HAVE BEEN ISSUED TO THE INSURED NAMED ABOVE FOR THE POLICY PERIOD INDICATED. NOTWITHSTANDING ANY REQUIREMENT, TERM OR CONDITION OF ANY CONTRACT OR OTHER DOCUMENT WITH RESPECT TO WHICH THIS CERTIFICATE MAY BE ISSUED OR MAY PERTAIN, THE INSURANCE AFFORDED BY THE POLICIES DESCRIBED HEREIN IS SUBJECT TO ALL THE TERMS, EXCLUSIONS AND CONDITIONS OF SUCH POLICIES. LIMITS SHOWN MAY HAVE BEEN REDUCED BY PAID CLAIMS.

INSR LTR	TYPE OF INSURANCE	ADDL INSD	SUBR WVD	POLICY NUMBER	POLICY EFF (MM/DD/YYYY)	POLICY EXP (MM/DD/YYYY)	LIMITS	
A	[X] COMMERCIAL GENERAL LIABILITY [ ] CLAIMS-MADE [X] OCCUR GEN'L AGGREGATE LIMIT APPLIES PER: [ ] POLICY [X] PRO-JECT [X] LOC [ ] OTHER:	Y	Y	CPP5001114	11/01/2022	11/01/2023	EACH OCCURRENCE	$ 1,000,000
							DAMAGE TO RENTED PREMISES (Ea occurrence)	$ 500,000
							MED EXP (Any one person)	$ 15,000
							PERSONAL & ADV INJURY	$ 1,000,000
							GENERAL AGGREGATE	$ 2,000,000
							PRODUCTS - COMP/OP AGG	$ 2,000,000
								$
A	AUTOMOBILE LIABILITY [X] ANY AUTO [ ] OWNED AUTOS ONLY [ ] SCHEDULED AUTOS [ ] HIRED AUTOS ONLY [ ] NON-OWNED AUTOS ONLY	Y	Y	BAC 5001116	11/01/2022	11/01/2023	COMBINED SINGLE LIMIT (Ea accident)	$ 1,000,000
							BODILY INJURY (Per person)	$
							BODILY INJURY (Per accident)	$
							PROPERTY DAMAGE (Per accident)	$
								$
B	[X] UMBRELLA LIAB [X] OCCUR [ ] EXCESS LIAB [ ] CLAIMS-MADE [ ] DED [X] RETENTION $ 0			7818-10-25	11/01/2022	11/01/2023	EACH OCCURRENCE	$ 20,000,000
							AGGREGATE	$ 20,000,000
								$
A	WORKERS COMPENSATION AND EMPLOYERS' LIABILITY ANY PROPRIETOR/PARTNER/EXECUTIVE OFFICER/MEMBER EXCLUDED? (Mandatory in NH) Y/N [N] If yes, describe under DESCRIPTION OF OPERATIONS below	N/A	Y	4812840	11/01/2022	11/01/2023	[X] PER STATUTE [ ] OTH-ER	
							E.L. EACH ACCIDENT	$ 500,000
							E.L. DISEASE - EA EMPLOYEE	$ 500,000
							E.L. DISEASE - POLICY LIMIT	$ 500,000
A	Property			CPP5001114	11/01/2022	11/01/2023	Blanket Property Limit: Blanket BI/EE Limit:	$2,443,000 $2,186,613

DESCRIPTION OF OPERATIONS / LOCATIONS / VEHICLES (ACORD 101, Additional Remarks Schedule, may be attached if more space is required)

Property coverage is special cause of loss, replacement cost. Deductible: $5,000. Wind & Hail Deductible: 2%

Job: 239778 CITY OF JACKSONVILLE FLEET MANAGEMENT - LIGHTS
The City of Jacksonville its members, officials, officers, employees and agents are named as Additional Insured with regard to General Liability and Auto Liability. Coverages are Primary & Non-Contributory. A waiver of subrogation in favor of The City of Jacksonville its members, officials, officers, employees and agents applies to General Liability, Auto Liability and Workers Compensation. 30 day notice of cancellation to The City of Jacksonville applies to all policies.

CERTIFICATE HOLDER
City Of Jacksonville
117 W. Duval St. Suite 335
Jacksonville FL 32202

CANCELLATION
SHOULD ANY OF THE ABOVE DESCRIBED POLICIES BE CANCELLED BEFORE THE EXPIRATION DATE THEREOF, NOTICE WILL BE DELIVERED IN ACCORDANCE WITH THE POLICY PROVISIONS.

AUTHORIZED REPRESENTATIVE
Kim Langley

© 1988-2015 ACORD CORPORATION. All rights reserved.

The ACORD name and logo are registered marks of ACORD

INDEMNIFICATION

Applicant and its subcontractors (the "Indemnifying Party") shall hold harmless, indemnify, and defend the City of Jacksonville and their respective members, officers, officials, employees and agents (collectively the "**Indemnified Parties**") from and against, without limitation, any and all claims, suits, actions, losses, damages, injuries, liabilities, fines, penalties, costs and expenses of whatsoever kind or nature, which may be incurred by, charged to or recovered from any of the foregoing Indemnified Parties for:

1. General Tort Liability, for any negligent act, error or omission, recklessness or intentionally wrongful conduct on the part of the Indemnifying Party that causes injury (whether mental or corporeal) to persons (including death) or damage to property, whether arising out of or incidental to the Indemnifying Party's performance of the **Agreement**, operations, services or work performed hereunder; and

2. Environmental Liability, to the extent this **Agreement** contemplates environmental exposures, arising from or in connection with any environmental, health and safety liabilities, claims, citations, clean-up or damages whether arising out of or relating to the operation or other activities performed in connection with the **Agreement**; and

3. Intellectual Property Liability, to the extent this **Agreement** contemplates intellectual property exposures, arising directly or indirectly out of any allegation that the Services provided under this **Agreement** (the "**Service(s)**"), any product generated by the Services, or any part of the Services as contemplated in this **Agreement**, constitutes an infringement of any copyright, patent, trade secret or any other intellectual property right. If in any suit or proceeding, the Services, or any product generated by the Services, is held to constitute an infringement and its use is permanently enjoined, the Indemnifying Party shall, immediately, make every reasonable effort to secure within sixty (60) days, for the Indemnified Parties, a license, authorizing the continued use of the Service or product. If the Indemnifying Party fails to secure such a license for the Indemnified Parties, then the Indemnifying Party shall replace the Service or product with a non-infringing Service or product or modify such Service or product in a way satisfactory to the City, so that the Service or product is non-infringing.

If an Indemnified Party exercises its right under this **Agreement**, the Indemnified Party will (1) provide reasonable notice to the Indemnifying Party of the applicable claim or liability, and (2) allow Indemnifying Party, at its own expense, to participate in the litigation of such claim or liability to protect its interests. **The scope and terms of the indemnity obligations herein described are separate and apart from, and shall not be limited by, any insurance provided pursuant to the Agreement or otherwise. Such terms of indemnity shall survive the expiration or termination of the Agreement.**

In the event that any portion of the scope or terms of this indemnity is in derogation of Section 725.06 or 725.08 of the Florida Statutes, all other terms of this indemnity shall remain in full force and effect. Further, any term which offends Section 725.06 or 725.08 of the Florida Statutes will be modified to comply with said statutes.

Insurance Requirements

Without limiting its liability under this Agreement, **Applicant and** its subcontractors shall always during the term of this **Agreement** procure prior to commencement of work to maintain coverages for the life of this **Agreement and** shall be endorsed to name the City of Jacksonville and their respective members, officers, officials, employees, and agents as additional insured as indicated in the insurance provisions.

Insurance Coverages

Schedule	Limits
Worker's Compensation	Florida Statutory Coverage
Employer's Liability	$ 100,000 Each Accident
	$ 500,000 Disease Policy Limit
	$ 100,000 Each Employee/Disease

This insurance shall cover the **Applicant** (and, to the extent they are not otherwise insured, its subcontractors) for those sources of liability which would be covered by the latest edition of the standard Workers' Compensation policy, as filed for use in the State of Florida by the National Council on Compensation Insurance (NCCI), without any restrictive endorsements other than the Florida Employers Liability Coverage Endorsement (NCCI Form WC 09 03), those which are required by the State of Florida, or any restrictive NCCI endorsements which, under an NCCI filing, must be attached to the policy (i.e., mandatory endorsements). In addition to coverage for the Florida Workers' Compensation Act, where appropriate, coverage is to be included for the Federal Employers' Liability Act, USL&H and Jones, and any other applicable federal or state law.

Commercial General Liability	$2,000,000	General Aggregate
	$2,000,000	Products & Comp. Ops. Agg.
	$1,000,000	Personal/Advertising Injury
	$1,000,000	Each Occurrence
	$ 50,000	Damage to Rented Premises
	$ 5,000	Medical Expenses

Such insurance shall be no more restrictive than that provided by the most recent version of the standard Commercial General Liability Form (ISO Form CG 00 01) as filed for use in the State of

Florida without any restrictive endorsements other than those reasonably required by the City's Office of Insurance and Risk Management. An Excess Liability policy or Umbrella policy can be used to satisfy the above limits.

Automobile Liability $1,000,000 Combined Single Limit
(Coverage for all automobiles, owned, hired or non-owned used in performance of the Contract)

Such insurance shall be no more restrictive than that provided by the most recent version of the standard Business Auto Coverage Form (ISO Form CA0001) as filed for use in the State of Florida without any restrictive endorsements other than those which are required by the State of Florida, or equivalent manuscript form, must be attached to the policy equivalent endorsement as filed with ISO (i.e., mandatory endorsement).

Cyber Liability & Data Storage $1,000,000 per Claim and Aggregate

Such insurance shall be on a form acceptable to the City of Jacksonville and shall cover, at a minimum, the following:

- Cyber Extortion
- Data Loss and System Damage Liability (when applicable)
- Security Liability
- Privacy Liability
- Privacy/Security Breach Response Coverage, including Notification Expenses

Such Cyber Liability coverage must be provided on an Occurrence Form or, if on a Claims Made Form, the retroactive date must be no later than the first date of this Contract and such claims-made coverage must respond to all claims reported within three years following the period for which coverage is required and which would have been covered had the coverage been on an occurrence basis.

Additional Insurance Provisions

A. Certificates of Insurance. **Applicant** shall deliver the City of Jacksonville Certificates of Insurance that shows the corresponding **City Contract or Bid Number** in the Description, **Additional Insureds, Waivers of Subrogation** and **& statement** as provided below. The certificates of insurance shall be mailed to the City of Jacksonville (Attention: Chief of Risk Management), 117 W. Duval Street, Suite 335, Jacksonville, Florida 32202.

B. Additional Insured: All insurance **except** Worker's Compensation, shall be endorsed to name the City of Jacksonville and their respective members, officers, officials, employees and agents as Additional Insured. Additional Insured for General Liability shall be in a form no more restrictive than CG2010 and, if products and completed operations is required, CG2037, Automobile Liability CA2048.

C. Waiver of Subrogation. All required insurance policies shall be endorsed to provide for a waiver of underwriter's rights of subrogation in favor of the City of Jacksonville and their respective members, officers, officials, employees and agents.

D. Carrier Qualifications. The above insurance shall be written by an insurer holding a current certificate of authority pursuant to chapter 624, Florida State or a company that is declared as an approved Surplus Lines carrier under Chapter 626 Florida Statutes. Such Insurance shall be written by an insurer with an A.M. Best Rating of A- VII or better.

E. **Applicant** Insurance Primary. The insurance provided by the **Applicant** shall apply on a primary basis to, and shall not require contribution from, any other insurance or self-insurance maintained by the City of Jacksonville and their respective members, officers, officials, employees and agents

F. Deductible or Self-Insured Retention Provisions. All deductibles and self-insured retentions associated with coverages required for compliance with this **Agreement** shall remain the sole and exclusive responsibility of the named insured **Applicant.** Under no circumstances will the City of Jacksonville and their respective members, officers, officials, employees and agents be responsible for paying any deductible or self-insured retention related to this **Agreement**.

G. **Agreement** Insurance Additional Remedy.Compliance with the insurance requirements of this **Agreement** shall not limit the liability of the **Applicant** or its Subcontractors, employees or agents to the City of Jacksonville and their respective members, officers, officials, employees and agents shall be in addition to and not in lieu of any other remedy available under this **Agreement** or otherwise.

H. Waiver/Estoppel. Neither approval by City of Jacksonville nor failure to disapprove the insurance furnished by **Applicant** shall relieve **Applicant** of **Applicant**'s full responsibility to provide insurance as required under this **Contract / Agreement / Lease**.

I. Notice. The relieve **Applicant** shall provide an endorsement issued by the insurer to provide the City thirty 30) days prior written notice of any change in the above insurance coverage limits or cancellation, including expiration or non-renewal. If such endorsement is not provided, the Contractor, as applicable, shall provide said a thirty (30) days written notice of any change in the above coverages or limits, coverage being suspended, voided, cancelled, including expiration or non-renewal.

J. Survival. Anything to the contrary notwithstanding, the liabilities of the **Applicant** under this Agreement shall survive and not be terminated, reduced or otherwise limited by any expiration or termination of insurance coverage.

K. Additional Insurance. Depending upon the nature of any aspect of any project and its accompanying exposures and liabilities, the City of Jacksonville may reasonably require additional insurance coverages in amounts responsive to those liabilities, which may or may not require that the City of Jacksonville and their respective members, officers, officials, employees and agents also be named as an additional insured.

L. Special Provision: Prior to executing this Agreement, **Applicant** shall present this **Agreement** and insurance requirements to its Insurance Agent Affirming: 1) That the Agent has Personally reviewed the insurance requirements of the Contract Documents, and (2) That the Agent is capable (has proper market access) to provide the coverages and limits of liability required on behalf of **Agreement**.

TBC Supply
PROPOSAL
404-605-8233
TEXT OR CALL
Online: www.tbcsupply.com
E-mail: contact@tbcsupply.com
Si prefiere español,
tenemos asociados disponibles que pueden ayudarlo
100 high-value manufacturing partners
BIG ASS FANS
GREE
Schwank

CUSTOMER CONTACT INFORMATION

CREDIT CARD IS PREFERRED METHOD OF PAYMENT FOR TBC SUPPLY ORDERS
COMPLETE THE INFORMATION ON THIS PAGE OR ONLINE TO APPLY FOR 30-DAY CREDIT TERMS
Online Application: [illegible]

Business Name:_____

Accounts Payable Contact Name:_____

Accounts Payable Phone Number:_____

Accounts Payable E-Mail: _____

DUNS#: _____

Please provide the PO number here: _____
Please provide any available PO documentation to your TBC SUPPLY sales representative

If this purchase is tax exempt (e.g., 501(c)(3), 509(a), Section 527, registered resellers, please provide a valid tax exemption certificate to your TBC SUPPLY sales representative

IS THE BILLING ADDRESS CORRECT ON THE QUOTE? Y / N
If this address is incorrect, please provide correct information below:

Company Name:_____

Contact Name:_____

Billing Address:_____

City, State, Zip: _____

Email: _____

Phone:_____DUNS #:_____

IS THE SHIPPING ADDRESS CORRECT ON THE QUOTE? Y / N
If this address is incorrect, please provide correct information below:

Company Name:_____

Contact Name:_____

Shipping Address:_____

City, State, Zip: _____

Email:_____

Phone:_____

Terms & Conditions of Sales
https://tbcsupply.com/terms-conditions-of-sales/

TXT2CHAT
404.605.8233
Powered by mobilico

TBC Supply
732 Joseph E. Lowery Blvd. NW
Atlanta, GA 30318

TEXT OR CALL
404.605.8233
www.tbcsupply.com
contact@tbcsupply.com

TBC Supply

BIG ASS FANS

TEXT or CALL 404-605-8233

TBC SUPPLY
Product Quotation

Quote Date	05/17/2023
Project Number	238732 XJ
BAF Number	878460

Customer Contact Information

David Hylazewski
(904)509-8088
davidhy@coj.net

Salesperson Contact Information

Name CJ Jennings
Phone 904-614-8926
E-mail cjennings@tbcsupply.com

Bill to

CITY OF JACKSONVILLE FLEET MANAGEMENT
2581 COMMONWEALTH AVE.
JACKSONVILLE, FLORIDA 32254

Ship To

CITY OF JACKSONVILLE FLEET MANAGEMENT
2581 COMMONWEALTH AVE.
JACKSONVILLE, FL 32254

Product Description	SKU	Qty	Unit Price	Total	Biz. Days
AirEye Fan Kit, 36", 120V/1PH, 1/3 HP, >200W, Black Guards, Yellow Blades	F-AE1-3601	19	$ 1,149	$ 21,831	10
AirEye C-Channel & I-Beam Mount Kit	M-AE1-2100	19	$ 200	$ 3,800	15
Directional Fan, Standard installation, First Fan, with lift, Zone 1 (AL, AR, FL, GA, KY, LA, MS, NC, NM, OK, SC, TN, TX)	N-DRCT-STND-1ST-WL-Z1	1	$ 4,320	$ 4,320	0
Directional Fan, Standard installation, Additional Fan, Zone 1 (AL, AR, FL, GA, KY, LA, MS, NC, NM, OK, SC, TN, TX)	N-DRCT-STND-AF-Z1	18	$ 1,680	$ 30,240	0
Essence Fan Kit, Wired, Black/Silver, 10ft, 100-125V/1 Phase, Black heat sink	F-ES2-1001A384Q141V46	5	$ 4,600	$ 23,000	10
Essence Mount Kit-Universal Mount, 4 ft extension tube w/guy wires	M-ES1-0604	5	$ 271	$ 1,355	10
Commercial Fan, Standard installation, First Fan, without lift, Zone 1 (AL, AR, FL, GA, KY, LA, MS, NC, NM, OK, SC, TN, TX)	N-COMM-STND-1ST-WOL-Z1	1	$ 5,520	$ 5,520	0
Commercial Fan, Standard installation, Additional Fan, Zone 1 (AL, AR, FL, GA, KY, LA, MS, NC, NM, OK, SC, TN, TX)	N-COMM-STND-AF-Z1	14	$ 3,307	$ 46,298	0
Essence Fan Kit, Wired, Black/Silver, 12ft, 100-125V/1 Phase, Black heat sink	F-ES2-1201A384Q141V46	10	$ 4,700	$ 47,000	10
Essence Mount Kit-Universal Mount, 4 ft extension tube w/guy wires	M-ES1-0604	5	$ 271	$ 1,355	10
Essence Mount Kit-Universal Mount, 5 ft extension tube w/guy wires	M-ES1-0605	5	$ 311	$ 1,555	10
Essence Mount Kit-Universal Mount, 3 ft extension tube	M-ES1-0603	1	$ 231	$ 231	10
Z-Purlin/Guy Wire Attachment Kit	003765-01	15	$ 405	$ 6,075	10
Installation Adder, Wall Penetration, Per Wall	N-ADDER-WALLPEN-PW	4	$ 280	$ 1,120	0

TBC Supply

BIG ASS FANS

TEXT or CALL 404-605-8233

TBC SUPPLY Product Quotation	Quote Date Project Number BAF Number	05/17/2023 238732 XJ 878460	Page 2 of 2

Product Description	SKU	Qty	Unit Price	Total	Lead Time
Notes: Kindly address all PO's to either TBCSupply or Tom Barrow Company			Subtotal	$ 193,700.00	
30-Day Payment Terms application availble online			Shipping/Handling	$ 9,760.00	
Credit Card Order Processing Available by online E-Mail invoice			Total Tax	$ 0.00	
All products are subject to Tom Barrow sales terms and conditions policy https://www.tombarrow.com/terms-conditions-of-sales Quote Expires: 06/17/2023	Please remit to: P.O.Box 116406 Atlanta GA, 30368-6406		GRAND TOTAL	$ 203,460.00	

click lease

Fast and convenient financing
Available for qualified customers

SIGNATURE _____

DATE _____

AIREYE®

Forget off-the-shelf box fans and rickety pedestal fans. AirEye brings Big Ass Fans' premium engineering to your facility with best-in-class performance, efficiency, and smart controls. An IP65-rated design and mountable, powder-coated steel frame give AirEye the durability to take on tough conditions so your workforce stays comfortable and productive.

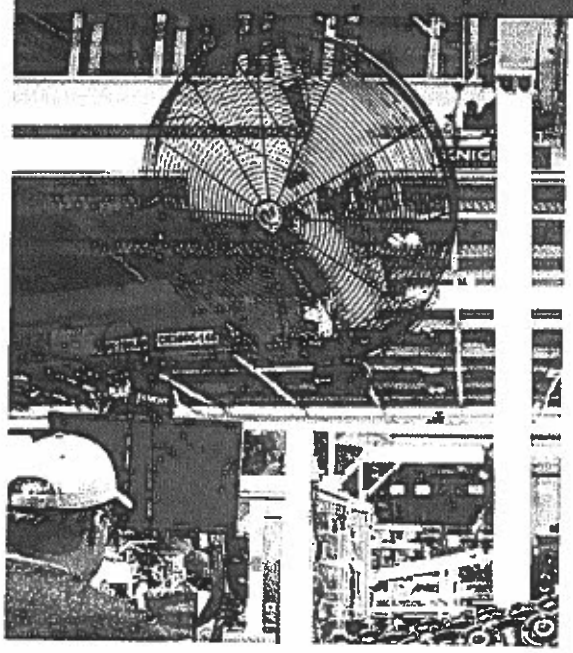

KEY FEATURES

Three blades precision-balanced for smooth performance

IP65-rated EC motor for superior protection from dust and water

Variable speed controller with virtually infinite airflow settings

50% more CFM per watt than basic induction motors

BMS integration and fan grouping with optional BAFCon controller

Occupancy sensor available for added convenience and energy savings

20, 24, 30, AND 36 INCHES (51, 61, 76, AND 91 CM)

PEDESTAL/LOW RIDER, WALL/COLUMN, SWIVEL ARM, OVERHEAD BEAMS, AND BAR JOISTS

100–120, 200–240, OR 277 VAC

UP TO 5 YEARS

BIG ASS FANS®

EXCEPTIONALLY ENGINEERED

DISCOVER MORE ABOUT AIREYE

Learn more at **bigassfans.com/aireye**
or call **877.BIG.FANS** for a free custom quote.

TECHNICAL SPECIFICATIONS

AIREYE

EASY TO MOVE, SIMPLE TO CONTROL, AND A BREEZE TO ENJOY.

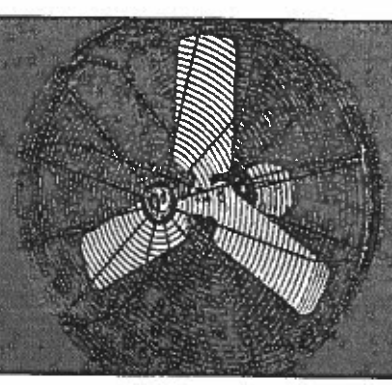

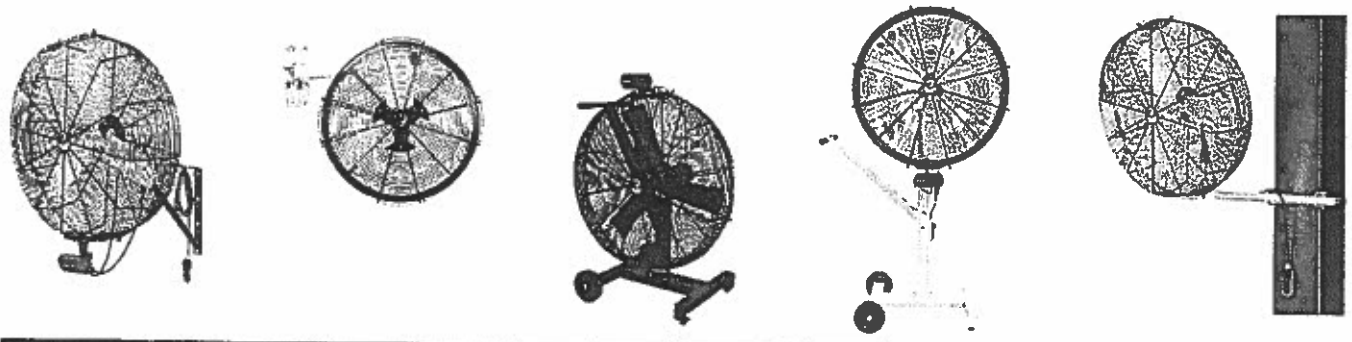

Technical Specifications

Fan Size	Weight[1]	Input Power[2]	Max amps	Max power	Max speed	Sound at max speed[2]
20 in. (508 mm)	32 lb (14.5 kg)	100–120 VAC, 1 Φ, 50/60 Hz 200–240 VAC, 1 Φ, 50/60 Hz 277 VAC, 1 Φ, 50/60 Hz	5.1 A 3.1 A 3.1 A	386 W 392 W 508 W	1220 RPM 1296 RPM 1300 RPM	69 dBA
24 in. (610 mm)	38 lb (17.2 kg)	100–120 VAC, 1 Φ, 50/60 Hz 200–240 VAC, 1 Φ, 50/60 Hz 277 VAC, 1 Φ, 50/60 Hz	5.2 A 3.1 A 3.0 A	396 W 400 W 501 W	1290 RPM 1317 RPM 1319 RPM	
30 in. (762 mm)	45 lb (20.4 kg)	100–120 VAC, 1 Φ, 50/60 Hz 200–240 VAC, 1 Φ, 50/60 Hz 277 VAC, 1 Φ, 50/60 Hz	5.0 A 3.0 A 3.1 A	384 W 390 W 508 W	1280 RPM 1215 RPM 1273 RPM	
36 in. (914 mm)	67 lb (30.4 kg)	100–120 VAC, 1 Φ, 50/60 Hz 200–240 VAC, 1 Φ, 50/60 Hz 277 VAC, 1 Φ, 50/60 Hz	9.7 A 5.5 A 4.5 A	711 W 669 W 716 W	950 RPM 950 RPM 965 RPM	72 dBA

Construction Features

Cage and Blades	Motor	Power Supply[4]	Control Options[5]	Environment	Colors	Occupancy Sensor
OSHA-compliant steel wire cage Three precision-balanced blades	Electronically commutated motor	18 ft (5.5 m) cord with plug fits standard power outlet	Infinitely variable speed Automation and multi-fan kit	Suitable for damp environments Rated IPX5	Black cage with high-visibility yellow motor and blades Custom colors available	Available AirEye Occupancy Sensor (AEOS) uses passive infrared detection to run AirEye only when you need it

Fan Ordering Information

AirEye	Diameter	Voltage[2]	Finish	Mount	Region	Controller[5]
F-AEI	20: 20 in. (508 mm) 24: 24 in. (610 mm) 30: 30 in. (762 mm) 36: 36 in. (914 mm)	01: 120 V 02: 240 V 03: 277 V	Blank: Standard A750C716: Midnight Black	L10: Pedestal Mount/Low Rider L12: Swivel Mount L13: Wall Mount L14: C-Channel/I-Beam Mount	Blank: US, CA, MX R01S34: Europe R03S34: Asia	V56: AirEye Occupancy Sensor V59: Automation and Multi-Fan Kit V56V59: Automation and Multi-Fan Kit with AirEye Occupancy Sensor

Accessory Ordering Information

Description	Part Number
3 ft (0.9 m) Drop Cord Extension (Control)	007269
6 ft (1.8 m) Drop Cord Extension (Control)	007270
12 ft (3.7 m) Drop Cord Extension (Control)	007271

Variable Speed Control

Occupancy Sensor

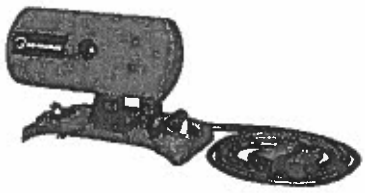

Finishes

[1] Weight does not include mounts or accessories.
[2] 277 V not compatible with mobile mounts or occupancy sensor, not available for international use
[3] Fans are sound tested at maximum speed in a laboratory environment. Actual results in field conditions may vary due to sound reflecting surfaces and environmental conditions
[4] Cable length may vary depending on region. 277 V cable does not include plug
[5] The AirEye Multi Fan kit must be used with the BAF Con controller. The kit is not compatible with the AirEye Standard Controller

Intertek UK CA CE

Lead times vary by SKU. See full warranty for coverage information.

BIG ASS FANS

USA
BIGASSFANS.COM
877-244-3267

CANADA
BIGASSFANS.COM
844-924-4277

AUSTRALIA
BIGASSFANS.COM/AU
1300 244 277

SINGAPORE
BIGASSFANS.COM/SG
65 6709 8500

© 2019 Delta T LLC d/b/a Big Ass Fans. All rights reserved. | F-AEI-TS-01 REV A | 08/16/19

Specifications subject to change without notice.

TECHNICAL SPECIFICATIONS

AIREYE

EASY TO MOVE, SIMPLE TO CONTROL, AND A BREEZE TO ENJOY.

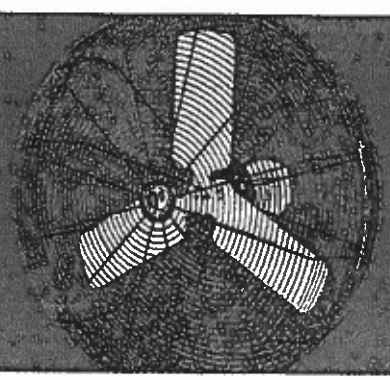

Blade and Cage Assembly

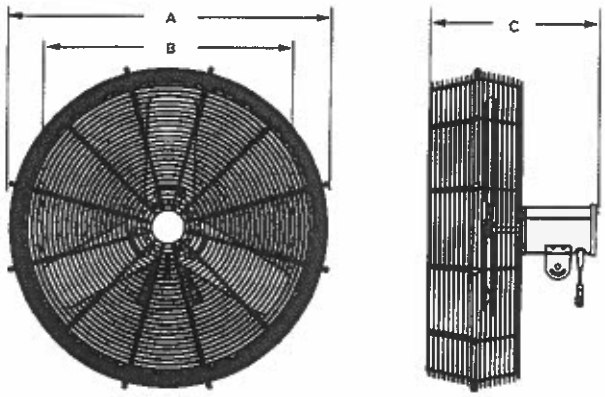

Cage Diameter (A)	Blade Diameter (B)	Depth (C)
25.8 in. (656 mm)	20.5 in. (521 mm)	19.5 in. (495 mm)
32 in. (813 mm)	24.5 in. (622 mm)	19.5 in. (495 mm)
38.2 in. (969 mm)	30.5 in. (775 mm)	19.5 in. (495 mm)
43.2 in. (1097 mm)	36.5 in. (927 mm)	21.5 in. (546 mm)

Swivel Mount

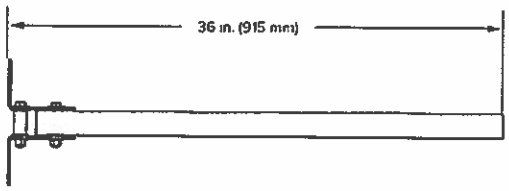

Weight: 16 lb (7.3 kg)

Wall Mount

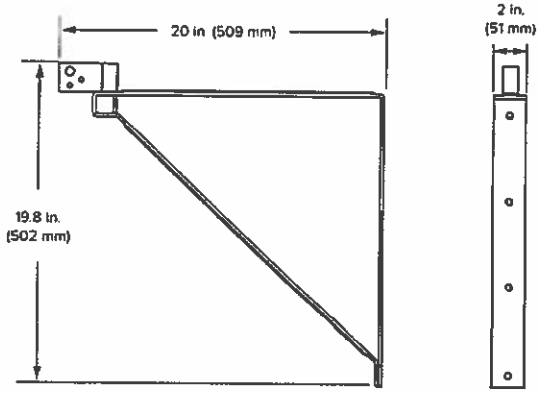

Weight: 9.5 lb (4.3 kg)

Pedestal Mount / Low Rider

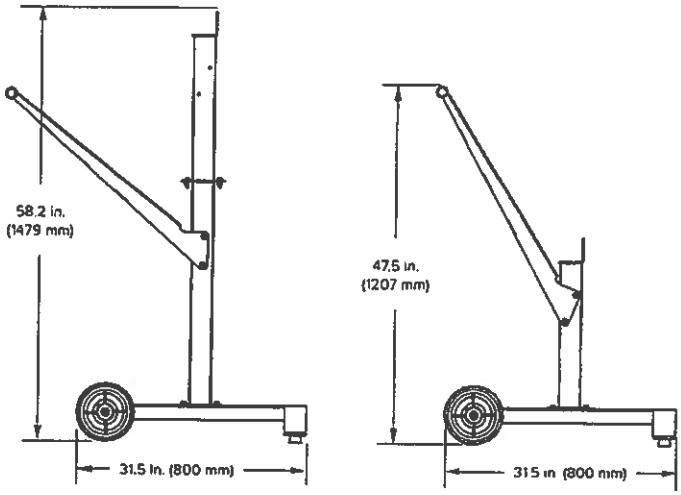

Weight: 44 lb (19.9 kg)

Weight: 39 lb (17.7 kg)

I-Beam Mount / C-Channel Mount

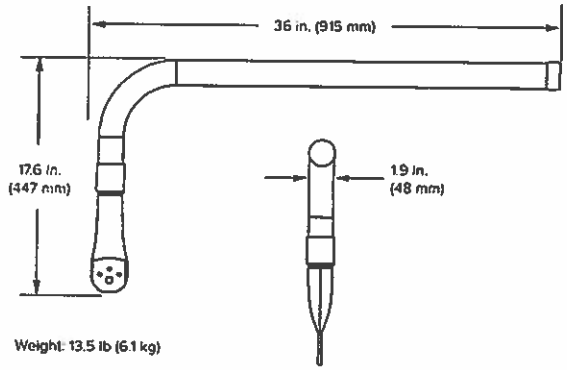

Weight: 13.5 lb (6.1 kg)

TECHNICAL SPECIFICATIONS

AIREYE OCCUPANCY SENSOR

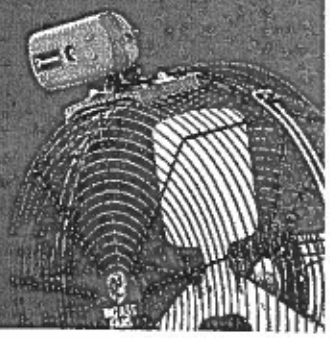

EASY TO MOVE, SIMPLE TO CONTROL, AND A BREEZE TO ENJOY.

With an effective range of up to 40 ft (12.2 m) within a 90-degree radius, the AirEye Occupancy Sensor automatically turns the fan on to a set speed when it detects infrared motion. Its adjustable lock knob allows users to aim the sensor where airflow is needed most, and two status LEDs display AirEye's power and motion-detection activity. The fan will shut off five minutes after occupants leave the area.

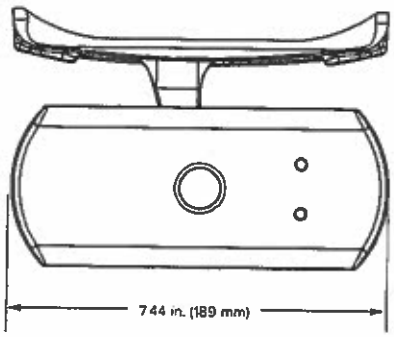

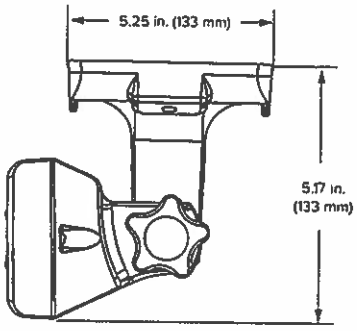

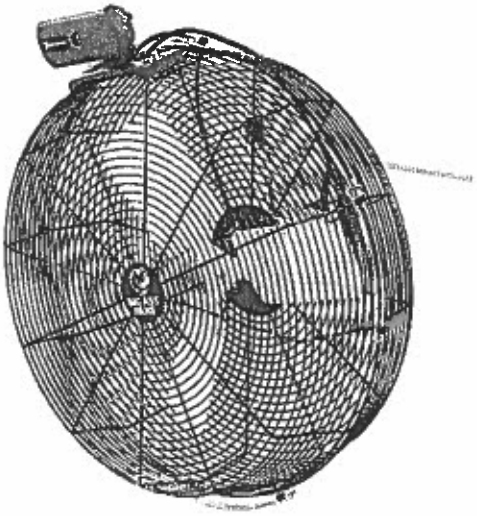

Sensor Coverage

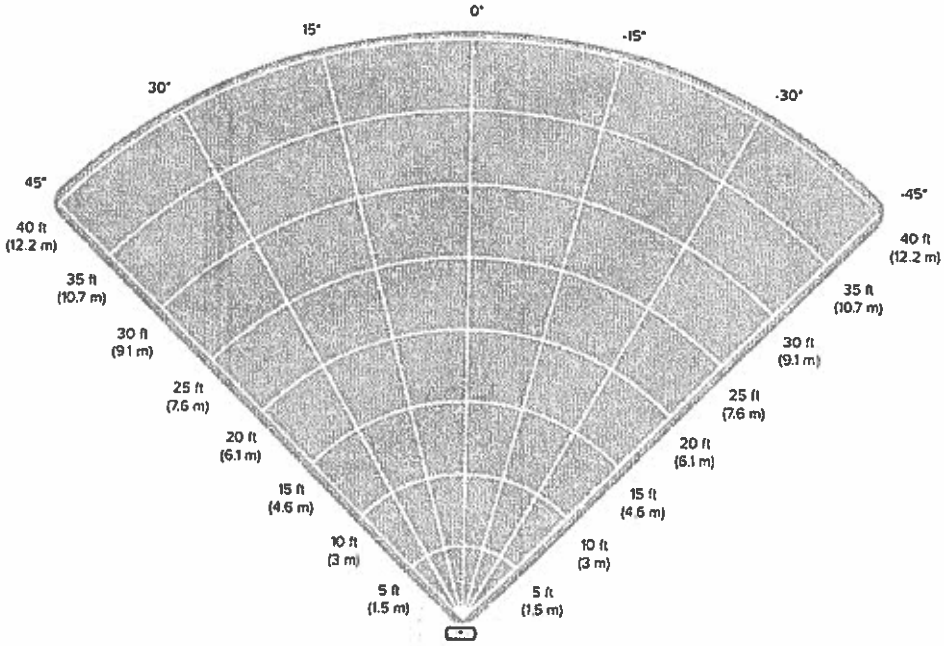

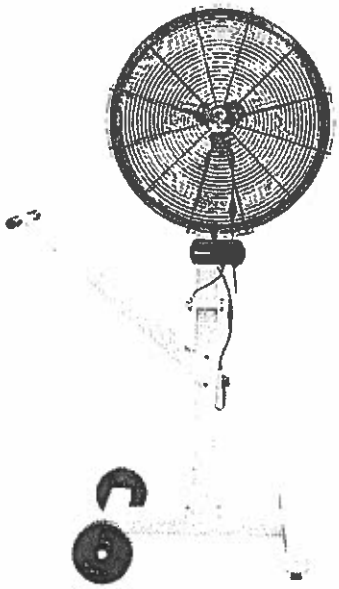

TECHNICAL SPECIFICATIONS

AIREYE

AIRFLOW SPECIFICATIONS

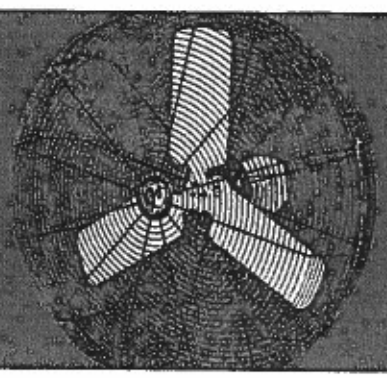

Shaded areas represent cooling up to 120 feet (36.6 meters). That's one-third the length of a football field! Darker shading indicates faster air velocity.

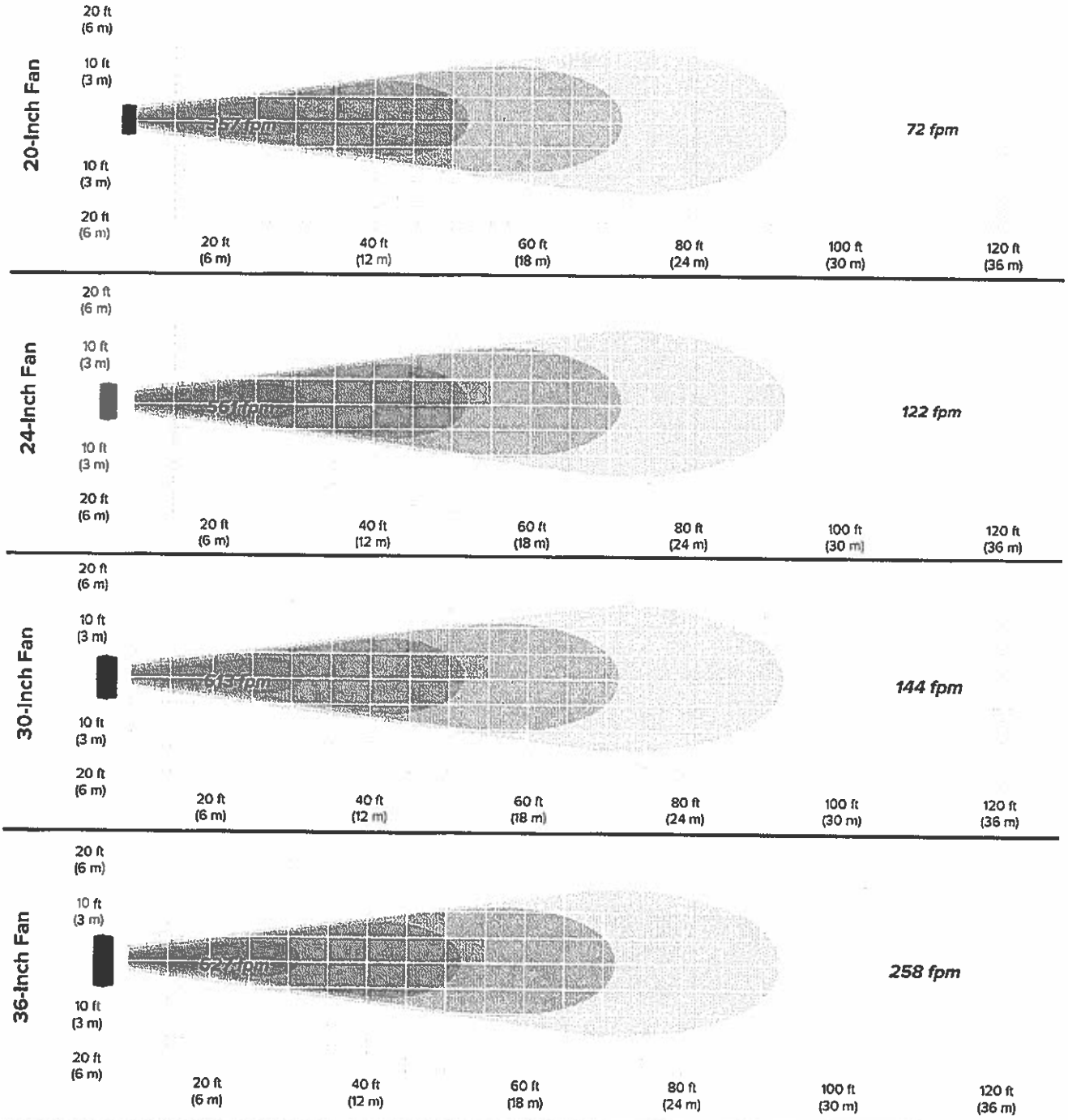

STANDARD SCOPE OF WORK

Directional Fans

BIG ASS FANS

This document is a reference tool only. Please consult the installation guide for complete installation instructions and safety guidelines.

GENERAL

- Includes regular working hours from 7 a.m. to 5 p.m., Monday through Friday. Afterhours charges will apply.
- If applicable, bridge cranes in or near fan installation area must be locked out during fan installation.
- To activate warranty coverage, Check-In and Close-Out forms must be completed and returned to Big Ass Fans.
- Whether provided by Big Ass Fans or the customer, the lift must be an OSHA-approved, two-man scissor lift, unless otherwise specified.
- If the lift is provided by the customer, but is unavailable or in an unsafe condition, Big Ass Fans will order a replacement lift and the customer will be charged for its usage, as well as any resulting downtime.
- Angle iron or other steel added by the installer in commercial or finished (non-industrial) spaces will be painted to match by the installer.
- Wasted trips or delays caused by the customer, including timely access to work area(s), timely delivery of fans to the installers, fan/controller placement indecision, and incomplete customer responsibilities, will result in extra charges.

NOT INCLUDED IN THIS SCOPE OF WORK

- Use of scaffolding, all-terrain lifts, articulated boom lifts, or specialty lifts
- Clean-up or rework of existing electrical infractions
- Additional local disconnecting means adjacent to the fan
- Welding or additional structural reinforcement
- Structural engineering charges
- Fire alarm tie-in at the fire control panel
- Repair/replace any type of fireproofing material
- Relocation of obstacles, such as light fixtures, electrical conduits, gas lines, water lines, sprinkler lines, etc.
- Preliminary work for electrical permit, e.g., layouts or additional visits
- Additional permits other than general electrical permit
- Any other requirements beyond details in this Scope of Work

CUSTOMER RESPONSIBILITY — *MUST BE COMPLETED PRIOR TO BIG ASS FANS' ARRIVAL*

- Receive and store the fan shipment in a safe, dry place until installation.

BIG ASS FANS RESPONSIBILITY

- Obtain all required electrical permits and inspections.
- Assemble and mount the complete fan kit to the building structure, including safety cables.
- Install wiring per NEC between the power source and junction box with a NEMA-specified receptacle with plate within 5 ft (1.5 m) of the fan mounting location. Power must be live before the installation is started. For 30-inch Sweat Bee using a motor starter/VFD, install wiring per NEC between the motor starter/VFD and the fan location.
- Make the electrical connection between the junction box and the fan. For 30-inch Sweat Bee, make the electrical connections on the motor starter/VFD and the fan.
- YELLOW JACKET: Install the wall-mounted controller to an accessible surface (column, concrete wall, or wood) within 15 ft (4.6 m) of the fan, and run wire connection to the fan in EMT conduit to eave height.
- Fan startup and operational training.

The installation of HVLS fans in buildings equipped with sprinklers, including ESFR sprinklers, shall comply with the following:

- **The HVLS fan shall be centered approximately between four adjacent sprinklers.**
- **The vertical distance from the HVLS fan to sprinkler deflector shall be a minimum of 3 ft (0.9 m).**
- **All HVLS fans shall be interlocked to shut down immediately upon receiving a water flow signal from the alarm system in accordance with the requirements of NFPA 72.**

WARNING: To reduce the risk of electric shock, wiring should be performed by a qualified electrician! Incorrect assembly can cause electric shock or damage the motor and the controller!

WARNING: Fan installation must be in accordance with the National Electrical Code, ANSI/NFPA 70, and all local codes. Failure to comply with these codes could result in personal injury or property damage.

CAUTION: The Big Ass Fans product warranty will not cover equipment damage or failure that is caused by improper installation by customer.

WARNING: The fan should not be installed unless the structure on which the fan is to be mounted is of sound construction, undamaged, and capable of supporting the loads of the fan and its method of mounting. Verifying the stability of the mounting structure is the sole responsibility of the customer and/or end user, and Big Ass Fans expressly disclaims any liability arising therefrom, or arising from the use of any materials or hardware other than those supplied by Big Ass Fans or otherwise specified in the installation instructions which can be found in the installation manual.

© 2019 Delta T LLC dba Big Ass Fans. All rights reserved.

ESSENCE®

Essence is the crowd favorite for creating a more comfortable and attractive space. Designed for power, versatility, and sophistication, its performance transforms stuffy conditions and offers any setting a centerpiece of style. Quiet and efficient, Essence lets you provide an enjoyable experience that keeps employees motivated, customers engaged, and guests in awe of your space.

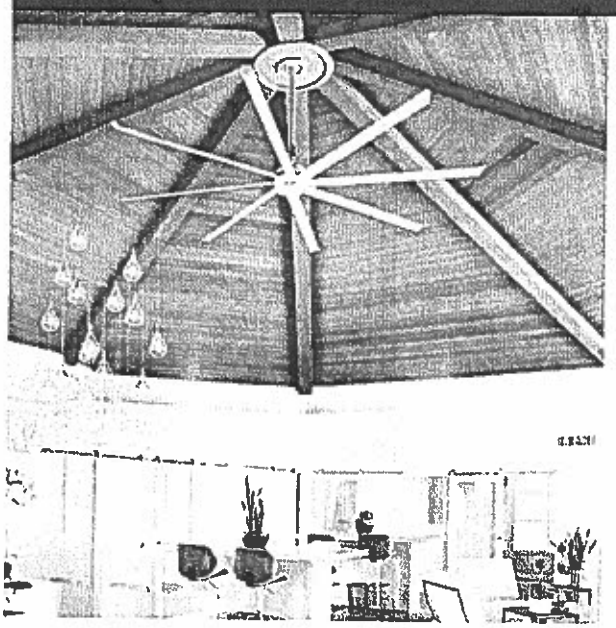

KEY FEATURES

Eight anodized airfoils with winglets and safety restraints

Virtually silent gearless direct-drive motor

Lightweight design mounts to bar joists, beams, purlins, and wood frames

Variety of control options for convenience and efficiency

Indoor and outdoor models available to fit any space

Color customization and integrated LED kit available to optimize your style

8-14 FEET (2.4-4.3 METERS)

I-BEAMS, BAR JOISTS, SOLID BEAMS, AND PURLINS

VARIABLE-SPEED WIRED/WIRELESS WALL MOUNT

UP TO 10 YEARS MECHANICAL

UP TO 10 YEARS ELECTRICAL

BIG ASS FANS®

EXCEPTIONALLY ENGINEERED

DISCOVER MORE ABOUT ESSENCE

Learn more at **bigassfans.com/essence** or call **877.BIG.FANS** for a free custom quote.

TECHNICAL SPECIFICATIONS

ESSENCE

THE BEST FAN FOR A BIG SPACE, INDOORS OR OUT

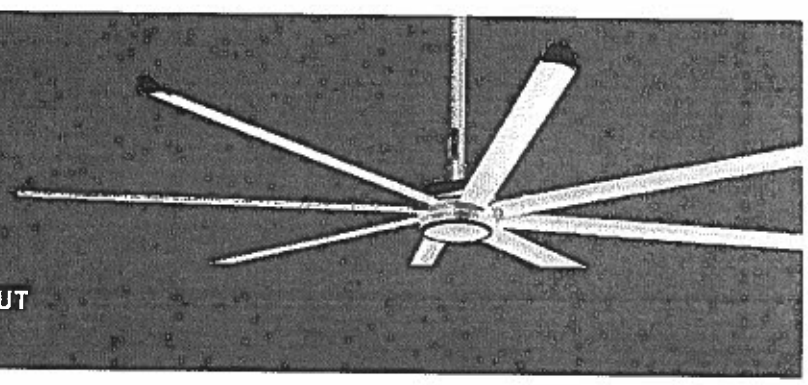

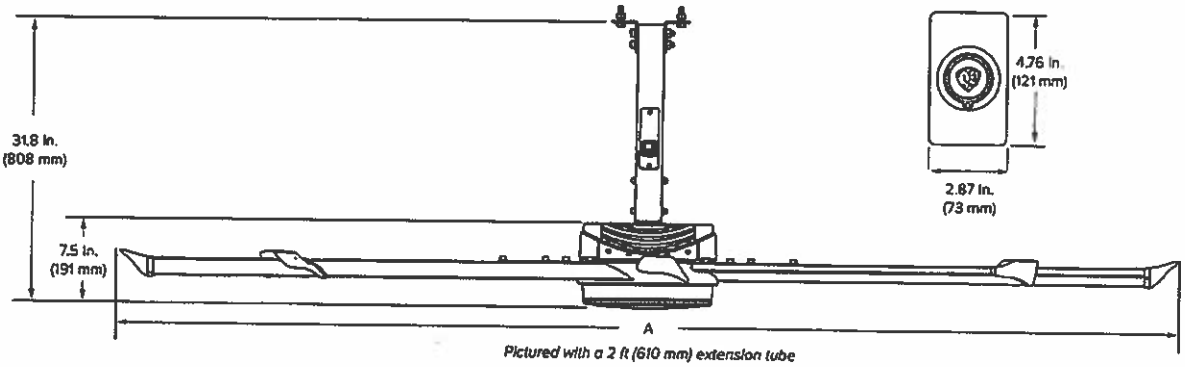

Pictured with a 2 ft (610 mm) extension tube

Technical Specifications

Diameter (A)	Weight[1]	Max Speed	Input Power and Required Breaker	Airfoil Clearances[2]	Sound at Max Speed[3]	IP Rating	Max Operating Temperature	Environment[4]
8 ft (2.4 m)	75 lb (34 kg)	158 RPM	110–125 VAC, 1 Φ, 50/60 Hz, 10 A 200–240 VAC, 1 Φ, 50/60 Hz, 10 A	2 ft (0.6 m) on sides 2 ft (0.6 m) below ceiling deck	<35 dBA	IP43	-4°F to 131°F (-20°C to 55°C)	Suitable for indoor or outdoor spaces
10 ft (3 m)	81 lb (37 kg)	107 RPM						
12 ft (3.7 m)	88 lb (40 kg)	76 RPM						
14 ft (4.3 m)	96 lb (44 kg)	56 RPM						

Construction Features

Airfoils	Motor and Drive	Certifications[5]	Mounting	Accessories	Colors
Eight anodized Mini-Ellipto airfoils with winglets (black or silver)	Gearless direct drive motor	UL Standard 507 and CSA Standard 22.2 No. 113	Standard upper mount installs to bar joists Optional kits allow for mounting to I-beams, solid beams, and purlins	LED Light Wireless Wall Controller	Standard colors are silver and black. Individualize your fan with one of our classic color upgrades, or work with our design consultants to create a shade that's all your own.

Standard Color Options

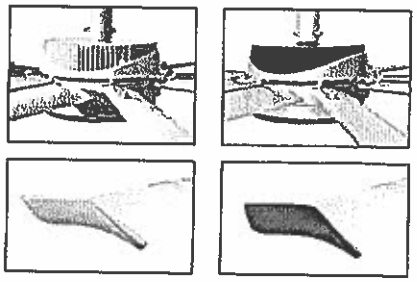

White Motor Housing with Silver Trim

Silver Motor Housing with Black Trim

LED Light (Optional)

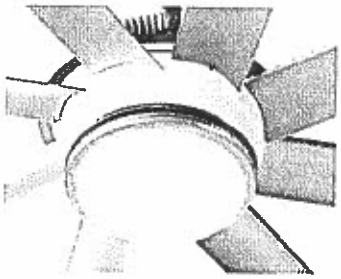

See the Essence LED spec sheet for details.

Control Options

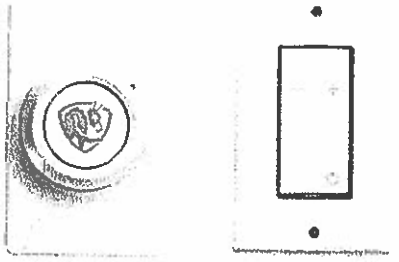

Wired Wall Controller

Wireless Wall Controller (Optional)

[1] Weight does not include mount or extension tube.
[2] Suitable for ceilings as low as 12 ft (3.7 meters). Measure the distance from the tip of the winglet to the ceiling or major obstruction.
[3] Fans are sound tested at maximum speed in a laboratory environment. Actual results in field conditions may vary due to sound reflecting surfaces and environmental conditions.
[4] Not suitable for salt air environments.
[5] Certifications listed here apply to the fan and do not include accessories.

Lead times may vary.
See full warranty for coverage information.

BIG ASS FANS

USA
BIGASSFANS.COM
877-244-3267

CANADA
BIGASSFANS.COM
844-924-4277

AUSTRALIA
BIGASSFANS.COM/AU
1300 244 277

SINGAPORE
BIGASSFANS.COM/SG
65 6709 8500

MALAYSIA
BIGASSFANS.COM/SG
603 5565 0889

© 2017 Delta T LLC dba Big Ass Fans. All rights reserved. | BAS-MKTG-37-ENG-01 REV. O | 06/23/21

Specifications subject to change without notice.

STANDARD SCOPE OF WORK

Commercial Fans

BIG ASS FANS

This document is a reference tool only. Please consult the installation guide for complete installation instructions and safety guidelines.

GENERAL

- Includes regular working hours from 7 a.m. to 5 p.m., Monday through Friday. Afterhours charges will apply.
- If applicable, bridge cranes in or near fan installation area must be locked out during fan installation.
- To activate warranty coverage, Check-In and Close-Out forms must be completed and returned to Big Ass Fans.
- Whether provided by Big Ass Fans or the customer, the lift must be an OSHA-approved, two-man scissor lift, unless otherwise specified.
- If the lift is provided by the customer, but is unavailable or in an unsafe condition, Big Ass Fans will order a replacement lift and the customer will be charged for its usage, as well as any resulting downtime.
- Angle iron or other steel added by the installer in commercial or finished (non-industrial) spaces will be painted to match by the installer.
- Wasted trips or delays caused by the customer, including timely access to work area(s), timely delivery of fans to the installers, fan/controller placement indecision, and incomplete customer responsibilities, will result in extra charges.

NOT INCLUDED IN THIS SCOPE OF WORK

- Use of scaffolding, all-terrain lifts, articulated boom lifts, or specialty lifts
- Clean-up or rework of existing electrical infractions
- Additional local disconnecting means adjacent to the fan
- Welding or additional structural reinforcement
- Structural engineering charges
- Fire alarm tie-in at the fire control panel
- Repair/replace any type of fireproofing material
- Relocation of obstacles, such as light fixtures, electrical conduits, gas lines, water lines, sprinkler lines, etc.
- Preliminary work for electrical permit, e.g., layouts or additional visits
- Additional permits other than general electrical permit
- Any other requirements beyond details in this Scope of Work

CUSTOMER RESPONSIBILITY — *MUST BE COMPLETED PRIOR TO BIG ASS FANS' ARRIVAL*

- Receive and store the fan shipment in a safe, dry place until installation.
- IF FIRE RELAY INSTALL NOT PURCHASED: Install fire wire per NEC from the fire control panel to the contact relay located in the Big Ass Fans-provided junction box at the fan location.
- Final tie-in to the fire panel. The provided relay requires 20–32 VDC to energize.

BIG ASS FANS RESPONSIBILITY

- Obtain all required electrical permits and inspections.
- For Wired Essence fans, install wiring from the power source to the fan mounting location per NEC, not to exceed 250 linear feet (76.2 m).
- For RF Wireless Essence and Isis fans, install wiring from the power source to the wall control location, and from the wall control to the fan mounting location, per NEC.
- Assemble and mount the complete fan kit to the building structure, including safety cables.
- Mount and install the wired wall control to an accessible surface (column, concrete wall, or wood) within 100 ft (30.5 m) of the fan, and run wiring to the fan (in EMT conduit to eave height). If the RF Wireless Controller is purchased, it will be installed within 50 ft (15.2 m) and in direct line-of-sight of the fan.
- IF FIRE RELAY INSTALL IS NOT PURCHASED: Install a contact relay in a Big Ass Fans-provided junction box located above the fan. (If fire relay is purchased, refer to the Fire Relay Scope of Work.)
- Fan startup and operational training.

The installation of HVLS fans in buildings equipped with sprinklers, including ESFR sprinklers, shall comply with the following:

- **The HVLS fan shall be centered approximately between four adjacent sprinklers.**
- **The vertical distance from the HVLS fan to sprinkler deflector shall be a minimum of 3 ft (0.9 m).**
- **All HVLS fans shall be interlocked to shut down immediately upon receiving a water flow signal from the alarm system in accordance with the requirements of NFPA 72.**

WARNING: To reduce the risk of electric shock, wiring should be performed by a qualified electrician! Incorrect assembly can cause electric shock or damage the motor and the controller!

WARNING: Fan installation must be in accordance with the National Electrical Code, ANSI/NFPA 70, and all local codes. Failure to comply with these codes could result in personal injury or property damage.

CAUTION: The Big Ass Fans product warranty will not cover equipment damage or failure that is caused by improper installation by customer.

WARNING: The fan should not be installed unless the structure on which the fan is to be mounted is of sound construction, undamaged, and capable of supporting the loads of the fan and its method of mounting. Verifying the stability of the mounting structure is the sole responsibility of the customer and/or end user, and Big Ass Fans expressly disclaims any liability arising therefrom, or arising from the use of any materials or hardware other than those supplied by Big Ass Fans or otherwise specified in the installation instructions which can be found in the installation manual.

© 2019 Delta T LLC dba Big Ass Fans. All rights reserved.

BuyBoard
National Purchasing Cooperative

Endorsed by NSBA National School Boards Association

October 22, 2020

Sent Via Email: adam.gilley@bigassfans.com

Adam Gilley
Big Ass Fans
2348 Innovation Dr.
Lexington, KY 40511

Welcome to BuyBoard!

Re: *Notice of National Purchasing Cooperative Award*
Proposal Name and Number: HVAC Equipment, Supplies, and Installation of HVAC Equipment, Proposal No. 631-20

Congratulations, The National Purchasing Cooperative (National Cooperative) has awarded your company a BuyBoard® contract based on the above-referenced Proposal. As provided for in the Proposal and your National Purchasing Cooperative Vendor Award Agreement, you are authorized to sell the goods and services awarded under the Proposal to National Cooperative members in states other than Texas through the BuyBoard. The contract is effective 12/1/2020 through 11/30/2021, with two possible one-year renewals.

The National Cooperative membership list is available at our website www.buyboard.com/vendor. The list identifies the current members that may purchase awarded goods and services under your National Cooperative BuyBoard contract.

You are advised that receipt of a purchase order directly from a National Cooperative member is not within BuyBoard guidelines. Accepting purchase orders directly from Cooperative members may result in a violation of applicable competitive procurement law and termination of this National Cooperative BuyBoard contract. **Therefore, all purchase orders from National Cooperative members must be processed through the BuyBoard**. Please forward by e-mail to info@buyboard.com any order received directly from a National Cooperative member. If you inadvertently process a purchase order sent directly to you by a National Cooperative member, please fax the order to the above number and note it as **RECORD ONLY** to prevent duplication.

As an awarded vendor a BuyBoard user id and password will be sent via e-mail 2 to 3 business days prior to the start of your contract.

On behalf of the National Cooperative, we are looking forward to your participation in the program. If you have any questions, please contact **Cooperative Procurement Staff at 800-695-2919**.

Sincerely,

Arturo Salinas
Department Director, Cooperative Procurement
v.6.5

P.O. Box 400, Austin, Texas 78767-0400
800.695.2919 • buyboard.com

12007 Research Boulevard • Austin, Texas 78759-2439 • PH: 800-695-2919 • FAX: 800-211-5454 • buyboard.com

PROPOSER'S AGREEMENT AND SIGNATURE

Proposal Name: HVAC Equipment, Supplies, and Installation of HVAC Equipment

Proposal Due Date/Opening Date and Time: July 14, 2020 at 4:00 PM

Location of Proposal Opening:
Texas Association of School Boards, Inc.
BuyBoard Department
12007 Research Blvd.
Austin, TX 78759

Proposal Number: 631-20

Anticipated Cooperative Board Meeting Date: October 2020

Contract Time Period: December 1, 2020 through November 30, 2021 with two (2) possible one-year renewals.

Big Ass Fans
Name of Proposing Company

July 10, 2020
Date

2348 Innovation Dr
Street Address

Joe Miller
Signature of Authorized Company Official

Lexington, KY 40511
City, State, Zip

Joe Miller
Printed Name of Authorized Company Official

859-629-7708
Telephone Number of Authorized Company Official

General Counsel
Position or Title of Authorized Company Official

859-233-0139
Fax Number of Authorized Company Official

82-3022782
Federal ID Number

The proposing company ("you" or "your") hereby acknowledges and agrees as follows:

1. You have carefully examined and understand all Cooperative information and documentation associated with this Proposal Invitation, including the Instructions to Proposers, General Terms and Conditions, attachments/forms, item specifications, and line items (collectively "Requirements");

2. By your response ("Proposal") to this Proposal Invitation, you propose to supply the products or services submitted at the prices quoted in your Proposal and in strict compliance with the Requirements, unless specific deviations or exceptions are noted in the Proposal;

3. Any and all deviations and exceptions to the Requirements have been noted in your Proposal and no others will be claimed;

4. If the Cooperative accepts any part of your Proposal and awards you a contract, you will furnish all awarded products or services at the prices quoted and in strict compliance with the Requirements (unless specific exceptions are noted in the Proposal and accepted by the Cooperative), including without limitation the Requirements related to:
   a. conducting business with Cooperative members, including offering pricing to members that is the best you offer compared to similar customers;
   b. payment of a service fee in the amount specified and as provided for in this Proposal Invitation;
   c. the **possible** award of a piggy-back contract by another governmental entity or nonprofit entity, in which event you will offer the awarded goods and services in accordance with the Requirements; and
   d. submitting price sheets or catalogs in the proper format as required by the Cooperative as a prerequisite to activation of your contract;

5. You have clearly identified on the included form any information in your Proposal that you believe to be confidential or proprietary or that you do not consider to be public information subject to public disclosure under a Texas Public Information Act request or similar public information law;

6. The individual signing this Agreement is duly authorized to enter into the contractual relationship represented by this Proposal Invitation on your behalf and bind you to the Requirements, and such individual (and any individual signing a form) is authorized and has the requisite knowledge to provide the information and make the representations and certifications required in the Requirements;

7. You have carefully reviewed your Proposal, and certify that all information provided is true, complete and accurate, and you authorize the Cooperative to take such action as it deems appropriate to verify such information; and

8. Any misstatement, falsification, or omission in your Proposal, whenever or however discovered, may disqualify you from consideration for a contract award under this Proposal Invitation or result in termination of an award or any other remedy or action provided for in the General Terms and Conditions or by law.

12007 Research Boulevard • Austin, Texas 78759-2439 · PH: 800-695-2919 • FAX: 800-211-5454 • buyboard.com

VENDOR CONTACT INFORMATION

Name of Company: Big Ass Fans

Vendor Proposal/Contract Contact Name: Adam Gilley

Vendor Proposal/Contract Contact E-mail Address: adam.gilley@bigassfans.com

Vendor Contact Mailing Address for Proposal/Contract Notices: 2348 Innovation Dr, Lexington, KY 40511

Company Website: www.bigassfans.com

Purchase Orders: All purchase orders from Cooperative members will be available through the Internet. Vendors need Internet access and at least one e-mail address so that notification of new orders can be sent to the Internet contact when a new purchase order arrives. An information guide will be provided to vendors to assist them with retrieving their orders.

Please select options below for receipt of purchase orders and provide the requested information:

☒ I will use the internet to receive purchase orders at the following address:

Purchase Order E-mail Address: adam.gilley@bigassfans.com

Purchase Order Contact: Adam Gilley Phone: 859-629-7708

Alternate Purchase Order E-mail Address: nolan.mcgaughey@bigassfans.com

Alternate Purchase Order Contact: Nolan McGaughey Phone: 859-629-7618

☐ Purchase orders may be received by the Designated Dealer(s) identified on my company's Dealer Designation form as provided to the Cooperative administrator. I understand that my company shall remain responsible for the Contract and the performance of all Designated Dealers under and in accordance with the Contract.

Request for Quotes ("RFQ"): Cooperative members will send RFQs to you by e-mail. Please provide e-mail addresses for the receipt of RFQs:

RFQ E-mail Address: adam.gilley@bigassfans.com

RFQ Contact: Adam Gilley Phone: 859-629-7708

Alternate RFQ E-mail Address: nolan.mcgaughey@bigassfans.com

Alternate RFQ Contact: Nolan McGaughey Phone: 859-629-7618

Invoices: Your company will be billed monthly for the service fee due under a contract awarded under this Proposal Invitation. **All invoices are available on the BuyBoard website and e-mail notifications will be sent when they are ready to be retrieved.** Please provide the following address, contact and e-mail information for receipt of service fee invoices and related communications:

Please choose only one (1) of the following options for receipt of invoices and provide the requested information:

☒ Service fee invoices and related communications should be provided directly to my company at:

Invoice Mailing address: 2348 Innovation Dr **Department:** Accounting

City: Lexington **State:** KY **Zip Code:** 40511

Contact Name: Tangela Dabney **Phone:** _____

Invoice Fax: _____ **Invoice E-mail Address:** tangela.dabney@bigassfans.com

Alternative Invoice E-mail Address: adam.gilley@bigassfans.com

☐ In lieu of my company, I request and authorize all service fee invoices to be provided directly to the following billing agent**:

Billing agent Mailing address: _____ **Department:** _____

City: _____ **State:** _____ **Zip Code:** _____

Billing Agent Contact Name: _____ **Phone:** _____

Billing Agent Fax: _____ **Billing Agent E-mail Address:** _____

Alternative Billing Agent E-mail Address: _____

***** If Vendor authorizes a billing agent to receive and process service fee invoices, in accordance with the General Terms and Conditions of the Contract, Vendor specifically acknowledges and agrees that nothing in that designation shall relieve Vendor of its responsibilities and obligations under the Contract including, but not limited to, payment of all service fees under any Contract awarded Vendor.***

BuyBoard® Cooperative Purchasing
12007 Research Boulevard • Austin, Texas 78759-2439 • PH: 800-695-2919 • FAX: 800-211-5454 • buyboard.com

FELONY CONVICTION DISCLOSURE AND DEBARMENT CERTIFICATION

FELONY CONVICTION DISCLOSURE

Subsection (a) of Section 44.034 of the Texas Education Code (Notification of Criminal History of Contractor) states: "A person or business entity that enters into a contract with a school district must give advance notice to the district if the person or an owner or operator has been convicted of a felony. The notice must include a general description of the conduct resulting in the conviction of a felony."

Section 44.034 further states in Subsection (b): "A school district may terminate a contract with a person or business entity if the district determines that the person or business entity failed to give notice as required by Subsection (a) or misrepresented the conduct resulting in the conviction. The district must compensate the person or business entity for services performed before the termination of the contract."

Please check (√) one of the following:

- ☐ My company is a publicly-held corporation. (Advance notice requirement does not apply to publicly-held corporation.)
- ☒ My company is not owned or operated by anyone who has been convicted of a felony.
- ☐ My company is owned/operated by the following individual(s) who has/have been convicted of a felony:

Name of Felon(s): _____

Details of Conviction(s): _____

_____

By signature below, I certify that the above information is true, complete and accurate and that I am authorized by my company to make this certification.

Delta T, LLC d/b/a Big Ass Fans
Company Name

Joe Miller
Signature of Authorized Company Official

Joe Miller, General Counsel
Printed Name

DEBARMENT CERTIFICATION

Neither my company nor an owner or principal of my company has been debarred, suspended or otherwise made ineligible for participation in Federal Assistance programs under Executive Order 12549, "Debarment and Suspension," as described in the Federal Register and Rules and Regulations. Neither my company nor an owner or principal of my company is currently listed on the government-wide exclusions in SAM, debarred, suspended, or otherwise excluded by agencies or declared ineligible under any statutory or regulatory authority. My company agrees to immediately notify the Cooperative and all Cooperative members with pending purchases or seeking to purchase from my company if my company or an owner or principal is later listed on the government-wide exclusions in SAM, or is debarred, suspended, or otherwise excluded by agencies or declared ineligible under any statutory or regulatory authority.

By signature below, I certify that the above is true, complete and accurate and that I am authorized by my company to make this certification.

Big Ass Fans
Company Name

Joe Miller
Signature of Authorized Company Official

Joe Miller, General Counsel
Printed Name

BuyBoard® Cooperative Purchasing
12007 Research Boulevard • Austin, Texas 78759-2439 • PH: 800-695-2919 • FAX: 800-211-5454 • buyboard.com

RESIDENT/NONRESIDENT CERTIFICATION

Chapter 2252, Subchapter A, of the Texas Government Code establishes certain requirements applicable to proposers who are not Texas residents. Under the statute, a "resident" proposer is a person whose principal place of business is in Texas, including a contractor whose ultimate parent company or majority owner has its principal place of business in Texas. A "nonresident" proposer is a person who is not a Texas resident. Please indicate the status of your company as a "resident" proposer or a "nonresident" proposer under these definitions.

Please check (√) one of the following:

☐ I certify that my company is a **Resident Proposer.**

☒ I certify that my company is a **Nonresident Proposer.**

If your company is a Nonresident Proposer, you must provide the following information for your resident state (the state in which your company's principal place of business is located):

Big Ass Fans	2348 Innovation Dr
Company Name	Address
Lexington	KY 40511
City	State Zip Code

A. Does your resident state require a proposer whose principal place of business is in Texas to under-price proposers whose resident state is the same as yours by a prescribed amount or percentage to receive a comparable contract?
☐ Yes ☒ No

B. What is the prescribed amount or percentage? $_____ or _____%

VENDOR EMPLOYMENT CERTIFICATION

Section 44.031(b) of the Texas Education Code establishes certain criteria that a school district must consider when determining to whom to award a contract. Among the criteria for certain contracts is whether the vendor or the vendor's ultimate parent or majority owner (i) has its principal place of business in Texas; or (ii) employs at least 500 people in Texas.

If neither your company nor the ultimate parent company or majority owner has its principal place of business in Texas, does your company, ultimate parent company, or majority owner employ at least 500 people in Texas?

Please check (√) one of the following:

☐ Yes ☒ No

By signature below, I certify that the information in Sections 1 (*Resident/Nonresident Certification)* and 2 *(Vendor Employment Certification)* above is true, complete and accurate and that I am authorized by my company to make this certification.

Big Ass Fans
Company Name

Joe Miller
Signature of Authorized Company Official

Joe Miller, General Counsel
Printed Name

NO ISRAEL BOYCOTT CERTIFICATION

Effective September 1, 2017, as amended effective May 7, 2019 (H.B. 793), a Texas governmental entity may not enter into a contract with a value of $100,000 or more that is to be paid wholly or partly from public funds with a company (excluding a sole proprietorship) that has 10 or more full-time employees for goods or services unless the contract contains a written verification from the company that it: (1) does not boycott Israel; and (2) will not boycott Israel during the term of the contract. (TEX. GOV'T CODE Ch. 2270). Accordingly, this certification form is included to the extent required by law.

"Boycott Israel" means refusing to deal with, terminating business activities with, or otherwise taking any action that is intended to penalize, inflict economic harm on, or limit commercial relations specifically with Israel, or with a person or entity doing business in Israel or in an Israeli-controlled territory, but does not include an action made for ordinary business purposes. TEX. GOV'T CODE §808.001(1).

By signature below, I certify and verify that Vendor does not boycott Israel and will not boycott Israel during the term of any contract awarded under this Proposal Invitation, that this certification is true, complete and accurate, and that I am authorized by my company to make this certification.

Big Ass Fans
Company Name

Joe Miller
Signature of Authorized Company Official

Joe Miller, General Counsel
Printed Name

***Note:** If Vendor does not wish to make this certification, return the blank form in lieu of a completed certification.*

NO EXCLUDED NATION OR FOREIGN TERRORIST ORGANIZATION CERTIFICATION

Effective September 1, 2017, Chapter 2252 of the Texas Government Code provides that a Texas governmental entity may not enter into a contract with a company engaged in active business operations with Sudan, Iran, or a foreign terrorist organization – specifically, any company identified on a list prepared and maintained by the Texas Comptroller under Texas Government Code §§806.051, 807.051, or 2252.153. (A company that the U.S. Government affirmatively declares to be excluded from its federal sanctions regime relating to Sudan, Iran, or any federal sanctions regime relating to a foreign terrorist organization is not subject to the contract prohibition.)

By signature below, I certify and verify that Vendor is not on the Texas Comptroller's list identified above; that this certification is true, complete and accurate; and that I am authorized by my company to make this certification.

Big Ass Fans
Company Name

Joe Miller
Signature of Authorized Company Official

Joe Miller, General Counsel
Printed Name

BuyBoard® Cooperative Purchasing
12007 Research Boulevard • Austin, Texas 78759-2439 • PH: 800-695-2919 • FAX: 800-211-5454 • buyboard.com

HISTORICALLY UNDERUTILIZED BUSINESS CERTIFICATION

A proposer that has been certified as a Historically Underutilized Business (also known as a Minority/Women Business Enterprise or "MWBE" and all referred to in this form as a "HUB") is encouraged to indicate its HUB certification status when responding to this Proposal Invitation. The electronic catalogs will indicate HUB certifications for vendors that properly indicate and document their HUB certification on this form.

Please check (√) all that apply:

☐ I certify that my company has been certified as a HUB in the following categories:

☐ **Minority Owned Business**

☐ **Women Owned Business**

☐ **Service-Disabled Veteran Owned Business (veteran defined by 38 U.S.C. §101(2), who has a service-connected disability as defined by 38 U.S.C. § 101(16), and who has a disability rating of 20% or more as determined by the U. S. Department of Veterans Affairs or Department of Defense)**

Certification Number:

_____

Name of Certifying Agency:

_____

☒ My company has **NOT** been certified as a HUB.

By signature below, I certify that the above is true, complete and accurate and that I am authorized by my company to make this certification.

Big Ass Fans
Company Name

Joe Miller, General Counsel
Printed Name

Joe Miller
Signature of Authorized Company Official

BuyBoard®
Cooperative Purchasing
12007 Research Boulevard • Austin, Texas 78759-2439 · PH: 800-695-2919 • FAX: 800-211-5454 • buyboard.com

CONSTRUCTION-RELATED GOODS AND SERVICES AFFIRMATION

A contract awarded under this Proposal Invitation covers only the specific goods and services awarded by the BuyBoard. As explained in the BuyBoard Procurement and Construction Related Goods and Services Advisory for Texas Members ("Advisory"), **Texas law prohibits the procurement of architecture or engineering services through a purchasing cooperative. This BuyBoard contract does not include such services. Architecture or engineering services must be procured by a Cooperative member separately, in accordance with the Professional Services Procurement Act (Chapter 2254 of the Texas Government Code) and other applicable law and local policy.**

The Advisory, available at buyboard.com/Vendor/Resources.aspx, provides an overview of certain legal requirements that are potentially relevant to a Cooperative member's procurement of construction or construction-related goods and services, including those for projects that may involve or require architecture, engineering or independent testing services. A copy of the Advisory can also be provided upon request.

By signature below, the undersigned affirms that Proposer has obtained a copy of the Advisory, has read and understands the Advisory, and is authorized by Proposer to make this affirmation. If Proposer sells construction-related goods or services to a Cooperative member under a BuyBoard contract awarded under this Proposal Invitation, Proposer will comply with the Advisory and applicable legal requirements, make a good faith effort to make its Cooperative member customers or potential Cooperative member customers aware of such requirements, and provide a Cooperative member with a copy of the Advisory before executing a Member Construction Contract with the member or accepting the member's purchase order for construction-related goods or services, whichever comes first.

Big Ass Fans
Company Name

Joe Miller
Signature of Authorized Company Official

Joe Miller, General Counsel
Printed Name

July 10, 2020
Date

BuyBoard® Cooperative Purchasing
12007 Research Boulevard • Austin, Texas 78759-2439 • PH: 800-695-2919 • FAX: 800-211-5454 • buyboard.com

DEVIATION AND COMPLIANCE

If your company intends to deviate from the General Terms and Conditions, Proposal Specifications or other requirements associated with this Proposal Invitation, you MUST list all such deviations on this form, and provide complete and detailed information regarding the deviations on this form or an attachment to this form. The Cooperative will consider any deviations in its contract award decision, and reserves the right to accept or reject a proposal based upon any submitted deviation.

In the absence of any deviation identified and described in accordance with the above, your company must fully comply with the General Terms and Conditions, Proposal Specifications and all other requirements associated with this Proposal Invitation if awarded a contract under this Proposal Invitation. A deviation will not be effective unless accepted by the Cooperative. The Cooperative may, in its sole discretion, seek clarification from and/or communicate with Proposer(s) regarding any submitted deviation, consistent with general procurement principles of fair competition. The Cooperative reserves the right to accept or reject a proposal based upon any submitted deviation.

Please check (√) one of the following:

☐ **No**; Deviations
☒ **Yes**; Deviations

List and fully explain any deviations you are submitting:

See attached riders.

Vendor removed deviations and accepted BuyBoard changes.

Lisa Maraden
BuyBoard Contract Administrator

PLEASE PROVIDE THE FOLLOWING INFORMATION:

1. Shipping Via: ☒ Common Carrier ☐ Company Truck ☐ Prepaid and Add to Invoice ☐ Other:

2. Payment Terms: ☒ Net 30 days ☐ 1% in 10/Net 30 days ☐ Other:

3. Number of Days for Delivery: Variable ARO

4. Vendor Reference/Quote Number: _____

5. State your return policy: Restocking fee for unopened shipping boxes is 25%; opened boxes will incur a 50% restocking fee.
Returns must be received within 90 days. Customer will be responsible for return freight charges.

6. Are electronic payments acceptable? ☒ Yes ☐ No

7. Are credit card payments acceptable? ☒ Yes ☐ No

Big Ass Fans
Company Name

Joe Miller
Signature of Authorized Company Official

Joe Miller, General Counsel
Printed Name

12007 Research Boulevard • Austin, Texas 78759-2439 · PH: 800-695-2919 • FAX: 800-211-5454 • buyboard.com

LOCATION/AUTHORIZED SELLER LISTINGS

If you have more than one location/authorized seller that will service a contract awarded under this Proposal Invitation, please list each location/authorized seller below. If additional sheets are required, please duplicate this form as necessary. NOTE: Awarded Vendors shall remain responsible for all aspects of the Contract, including processing of Purchase Orders, and shall be responsible for the performance of all locations and authorized sellers under and in accordance with the Contract. If you are a product manufacturer and wish to designate Designated Dealers as defined in the General Terms and Conditions to receive Cooperative member Purchase Orders on your behalf, you must complete the Manufacturer Designated Dealer form.

Company Name

Address

City State Zip

Phone Number Fax Number

Contact Person

Company Name

Address

City State Zip

Phone Number Fax Number

Contact Person

BuyBoard® Cooperative Purchasing
12007 Research Boulevard • Austin, Texas 78759-2439 · PH: 800-695-2919 • FAX: 800-211-5454 • buyboard.com

MANUFACTURER DEALER DESIGNATION

If Vendor is a manufacturer that sells products through a dealer network and wishes to designate a dealer or multiple dealers ("Designated Dealers") to receive Cooperative member Purchase Orders on Vendor's behalf, you must complete this form for each dealer you wish to designate.

Regardless of any Designated Dealers submitted by Vendor, Vendor specifically agrees and acknowledges that any such designations are for Vendor's convenience only and shall not, if Vendor is awarded a Contract, relieve Vendor of any obligations under the Contract, including payment of Cooperative service fees on all Purchase Orders submitted to Vendor or any Designated Dealer. In accordance with the General Terms and Conditions, an awarded Vendor shall remain responsible and liable for all of its obligations under the Contract and the performance of both Vendor and any of Vendor's Designated Dealers under and in accordance with the Contract and remain subject to all remedies for default thereunder, including, but not limited to suspension and termination of Vendor's Contract for nonpayment of service fees.

If awarded, Vendor authorizes the Cooperative, in its sole discretion, to list any Vendor Designated Dealers in the BuyBoard system and to receive Purchase Orders directly from Cooperative members on behalf of Vendor. To the extent a Vendor with Designated Dealers receives a Purchase Order directly, it shall be the responsibility of Vendor to appropriately process such Purchase Order in accordance with the Contract, including but not limited to timely forwarding such Purchase Order to a Designated Dealer for processing.

The Cooperative reserves the right, in its sole discretion, to refuse addition of, or request removal of, any Designated Dealer, and Vendor agrees to immediately require such Designated Dealer to cease accepting Purchase Orders or otherwise acting on Vendor's behalf under the Contract. Further, the Cooperative's administrator shall be authorized to remove or suspend any or all Designated Dealers from the BuyBoard at any time in its sole discretion.

If you wish to designate a dealer to service a contract awarded under this Proposal Invitation, please list the Designated Dealer below and have this form signed by an official of your company authorized to make such designation. If you wish to designate multiple dealers, please duplicate this form as necessary.

_____
Designated Dealer Name

_____
Designated Dealer Address

_____ _____ _____
City State Zip

_____ _____
Phone Number Fax Number

_____ _____
Email address Designated Dealer Tax ID Number* **(*attach W-9)**

_____
Designated Dealer Contact Person

_____ _____
Your Company Name Signature of Authorized Company Official

BuyBoard®
Cooperative Purchasing
12007 Research Boulevard • Austin, Texas 78759-2439 • PH: 800-695-2919 • FAX: 800-211-5454 • buyboard.com

TEXAS REGIONAL SERVICE DESIGNATION

The Cooperative (referred to as "Texas Cooperative" in this form and in the State Service Designation form) offers vendors the opportunity to service its members throughout the entire State of Texas. If you do not plan to service all Texas Cooperative members statewide, you **must** indicate the specific regions you will service on this form. ***If you propose to serve different regions for different products or services included in your proposal, you must complete and submit a separate Texas Regional Service Designation form for each group of products and clearly indicate the products or services to which the designation applies in the space provided at the end of this form. By designating a region or regions, you are certifying that you are authorized and willing to provide the proposed products and services in those regions. Designating regions in which you are either unable or unwilling to provide the specified products and services shall be grounds for either rejection of your proposal or, if awarded, termination of your Contract.*** Additionally, if you do not plan to service Texas Cooperative members (i.e., if you will service only states other than Texas), you must so indicate on this form.

Regional Education Service Centers

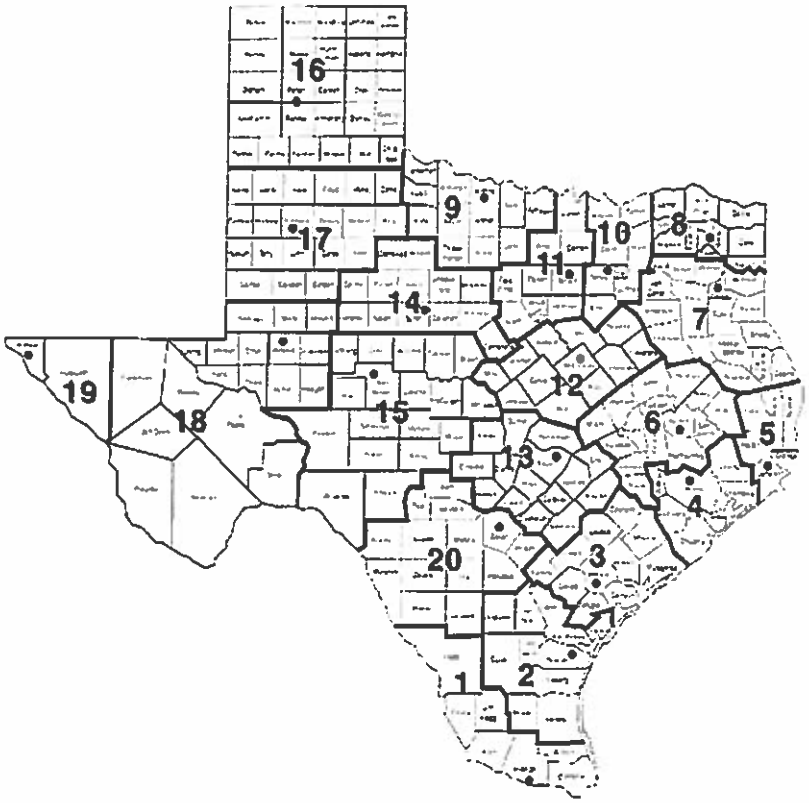

☒ **I will service Texas Cooperative members statewide.**

☐ **I will not service Texas Cooperative members statewide. I will only service members in the regions checked below:**

Region and Headquarters

- ☐ 1 Edinburg
- ☐ 2 Corpus Christi
- ☐ 3 Victoria
- ☐ 4 Houston
- ☐ 5 Beaumont
- ☐ 6 Huntsville
- ☐ 7 Kilgore
- ☐ 8 Mount Pleasant
- ☐ 9 Wichita Falls
- ☐ 10 Richardson
- ☐ 11 Fort Worth
- ☐ 12 Waco
- ☐ 13 Austin
- ☐ 14 Abilene
- ☐ 15 San Angelo
- ☐ 16 Amarillo
- ☐ 17 Lubbock
- ☐ 18 Midland
- ☐ 19 El Paso
- ☐ 20 San Antonio

☐ I will not service members of the Texas Cooperative.

Big Ass Fans
Company Name

Joe Miller
Signature of Authorized Company Official

Joe Miller, General Counsel
Printed Name

If this Texas Regional Service Designation form applies to only one or some of the products and services proposed by Vendor, list the products and services to which this form applies here:

_____

_____

_____

BuyBoard®
Cooperative Purchasing
12007 Research Boulevard • Austin, Texas 78759-2439 • PH: 800-695-2919 • FAX: 800-211-5454 • buyboard.com

STATE SERVICE DESIGNATION

The Cooperative offers vendors the opportunity to service other governmental entities in the United States, including intergovernmental purchasing cooperatives such as the National Purchasing Cooperative BuyBoard. You must complete this form if you plan to service the entire United States, or will service only the specific states indicated. *(Note: If you plan to service Texas Cooperative members, be sure that you complete the Texas Regional Service Designation form.)*

If you serve different states for different products or services included in your proposal, you must complete and submit a separate State Service Designation form for each group of products and clearly indicate the products or services to which the designation applies in the space provided at the end of this form. By designating a state or states, you are certifying that you are authorized and willing to provide the proposed products and services in those states. Designating states in which you are either unable or unwilling to provide the specified products and services shall be grounds for either rejection of your proposal or, if awarded, termination of your Contract.

Please check (√) all that apply:

☒ I will service all states in the United States.

☐ I will not service all states in the United States. I will service only the states checked below:

- ☐ Alabama
- ☐ Alaska
- ☐ Arizona
- ☐ Arkansas
- ☐ California (Public Contract Code 20118 & 20652)
- ☐ Colorado
- ☐ Connecticut
- ☐ Delaware
- ☐ District of Columbia
- ☐ Florida
- ☐ Georgia
- ☐ Hawaii
- ☐ Idaho
- ☐ Illinois
- ☐ Indiana
- ☐ Iowa
- ☐ Kansas
- ☐ Kentucky
- ☐ Louisiana
- ☐ Maine
- ☐ Maryland
- ☐ Massachusetts
- ☐ Michigan
- ☐ Minnesota
- ☐ Mississippi
- ☐ Missouri
- ☐ Montana
- ☐ Nebraska
- ☐ Nevada
- ☐ New Hampshire
- ☐ New Jersey
- ☐ New Mexico
- ☐ New York
- ☐ North Carolina
- ☐ North Dakota
- ☐ Ohio
- ☐ Oklahoma
- ☐ Oregon
- ☐ Pennsylvania
- ☐ Rhode Island
- ☐ South Carolina
- ☐ South Dakota
- ☐ Tennessee
- ☐ Texas
- ☐ Utah
- ☐ Vermont
- ☐ Virginia
- ☐ Washington
- ☐ West Virginia
- ☐ Wisconsin
- ☐ Wyoming

This form will be used to ensure that you can service other governmental entities throughout the United States as indicated. Your signature below confirms that you understand your service commitments during the term of a contract awarded under this proposal.

Big Ass Fans
Company Name

Joe Miller
Signature of Authorized Company Official

Joe Miller, General Counsel
Printed Name

If this State Service Designation form applies to only one or some of the products and services proposed by Vendor, list the products and services to which this form applies here:

BuyBoard®
Cooperative Purchasing
12007 Research Boulevard • Austin, Texas 78759-2439 · PH: 800-695-2919 • FAX: 800-211-5454 • buyboard.com

NATIONAL PURCHASING COOPERATIVE VENDOR AWARD AGREEMENT

In accordance with the Terms and Conditions associated with this Proposal Invitation, a contract awarded under this Proposal Invitation may be "piggy-backed" by another governmental entity. The National Purchasing Cooperative is an intergovernmental purchasing cooperative formed by certain school districts outside of Texas to serve its members throughout the United States. If you agree to be considered for a piggy-back award by the National Purchasing Cooperative, you agree to the following terms and agree to serve National Purchasing Cooperative members in the states you have indicated on the State Service Designation form, in your Proposal.

By signing this form, Proposer (referred to in this Agreement as "Vendor") agrees as follows:

1. Vendor acknowledges that if The Local Government Purchasing Cooperative ("Texas Cooperative") awards Vendor a contract under this Proposal Invitation ("Underlying Award"), the National Purchasing Cooperative ("National Cooperative") may - but is not required to - "piggy-back" on or re-award all or a portion of that Underlying Award ("Piggy-Back Award"). By signing this National Cooperative Vendor Award Agreement ("Agreement"), Vendor accepts and agrees to be bound by any such Piggy-Back Award as provided for herein.

2. In the event National Cooperative awards Vendor a Piggy-Back Award, the National Cooperative Administrator ("BuyBoard Administrator") will notify Vendor in writing of such Piggy-Back Award, which award shall commence on the effective date stated in the Notice and end on the expiration date of the Underlying Award, subject to annual renewals as authorized in writing by the BuyBoard Administrator. Vendor agrees that no further signature or other action is required of Vendor in order for the Piggy-Back Award and this Agreement to be binding upon Vendor. Vendor further agrees that no interlineations or changes to this Agreement by Vendor will be binding on National Cooperative, unless such changes are agreed to by its BuyBoard Administrator in writing.

3. Vendor agrees that it shall offer its goods and services to National Cooperative members at the same unit pricing and same general terms and conditions, subject to applicable state laws in the state of purchase, as required by the Underlying Award. However, nothing in this Agreement prevents Vendor from offering National Cooperative members better (i.e., lower) competitive pricing and more favorable terms and conditions than those in the Underlying Award.

4. Vendor hereby agrees and confirms that it will serve those states it has designated on the State Service Designation Form of this Proposal Invitation. Any changes to the states designated on the State Service Designation Form must be approved in writing by the BuyBoard Administrator.

5. Vendor agrees to pay National Cooperative the service fee provided for in the Underlying Award based on the amount of purchases generated from National Cooperative members through the Piggy-Back Award. Vendor shall remit payment to National Cooperative on such schedule as it specifies (which shall not be more often than monthly). Further, upon request, Vendor shall provide National Cooperative with copies of all purchase orders generated from National Cooperative members for purposes of reviewing and verifying purchase activity. Vendor further agrees that National Cooperative shall have the right, upon reasonable written notice, to review Vendor's records pertaining to purchases made by National Cooperative members in order to verify the accuracy of service fees.

6. Vendor agrees that the Underlying Award, including its General Terms and Conditions, are adopted by reference to the fullest extent such provisions can reasonably apply to the post-proposal/contract award phase. The rights and responsibilities that would ordinarily inure to the Texas Cooperative pursuant to the Underlying Award shall inure to National Cooperative; and, conversely, the rights and responsibilities that would ordinarily inure to Vendor in the Underlying Award shall inure to Vendor in this Agreement. Vendor recognizes and agrees that Vendor and National Cooperative are the only parties to this Agreement, and that nothing in this Agreement has application to other third parties, including the Texas Cooperative. In the event of conflict between this Agreement and the terms of the Underlying Award, the terms of this Agreement shall control, and then only to the extent necessary to reconcile the conflict.

7. This Agreement shall be governed and construed in accordance with the laws of the State of Rhode Island and venue for any dispute shall lie in the federal district court of Alexandria, Virginia.

8. Vendor acknowledges and agrees that the award of a Piggy-Back Award is within the sole discretion of National Cooperative, and that this Agreement does not take effect unless and until National Cooperative awards Vendor a Piggy-Back Award and the BuyBoard Administrator notifies Vendor in writing of such Piggy-Back Award as provided for herein.

WHEREFORE, by signing below Vendor agrees to the foregoing and warrants that it has the authority to enter into this Agreement.

Big Ass Fans
Name of Vendor

631-20
Proposal Invitation Number

Joe Miller
Signature of Authorized Company Official

Joe Miller, General Counsel
Printed Name of Authorized Company Official

July 10, 2020
Date

BuyBoard® Cooperative Purchasing
12007 Research Boulevard • Austin, Texas 78759-2439 • PH: 800-695-2919 • FAX: 800-211-5454 • buyboard.com

FEDERAL AND STATE/PURCHASING COOPERATIVE EXPERIENCE

The Cooperative strives to provide its members with the best services and products at the best prices available from vendors with the technical resources and ability to serve Cooperative members. Please respond to the following questions.

1. Provide the dollar value of sales to or through purchasing cooperatives at or based on an established catalog or market price during the previous 12-month period or the last fiscal year: $ 429,129.95 . (The period of the 12 month period is 06-01-2019 / 06-30-2020). In the event that a dollar value is not an appropriate measure of the sales, provide and describe your own measure of the sales of the item(s).

2. By submitting a proposal, you agree that, based on your written discounting policies, the discounts you offer the Cooperative are equal to or better than the best price you offer other purchasing cooperatives for the same items under equivalent circumstances.

3. Provide the information requested below for other purchasing cooperatives for which Proposer currently serves, or in the past has served, as an awarded vendor. Rows should be added to accommodate as many purchasing cooperatives as required.

PURCHASING GROUP	CURRENT VENDOR? (Y/N)	FORMER VENDOR (Y/N)? – IF YES, LIST YEARS AS VENDOR	AWARDED COMMODITY CATEGORY(IES)
1. Federal General Services Administration	Y		Fans
2. T-PASS (State of Texas)			
3. OMNIA Partners			
4. Sourcewell (NJPA)			
5. E&I Cooperative			
6. Houston-Galveston Area Council (HGAC)			
7. Choice Partners			
8. The Interlocal Purchasing System (TIPS)			
9. Other			

☐ **MY COMPANY DOES NOT CURRENTLY HAVE ANY OF THE ABOVE OR SIMILAR TYPE CONTRACTS.**

CURRENT BUYBOARD VENDORS

If you are a current BuyBoard vendor in the same contract category as proposed in this Proposal Invitation, indicate the discount for your current BuyBoard contract and the proposed discount in this Proposal. Explain any difference between your current and proposed discounts.

Current Discount (%): 10% **Proposed Discount (%):** 10%

Explanation: Continuing the same discount structure.

By signature below, I certify that the above is true, complete and accurate and that I am authorized by my company to make this certification.

Big Ass Fans
Company Name

Joe Miller
Signature of Authorized Company Official

Joe Miller, General Counsel
Printed Name

BuyBoard® Cooperative Purchasing
12007 Research Boulevard • Austin, Texas 78759-2439 • PH: 800-695-2919 • FAX: 800-211-5454 • buyboard.com

GOVERNMENTAL REFERENCES

For your Proposal to be considered, you must supply a minimum of five (5) individual governmental entity references. The Cooperative may contact any and all references provided as part of the Proposal evaluation. Provide the information requested below, including the existing price/discounts you offer each customer. The Cooperative may determine whether prices/discounts are fair and reasonable by comparing prices/discounts stated in your Proposal with the prices/discounts you offer other governmental customers. Attach additional pages if necessary.

	Entity Name	Contact	Phone#	Email Address	Discount	Quantity/ Volume
1.	Calallen ISD	Blair McDavid	361-242-5604	bmcdavid@calallen.org	6/10%	
2.	Lake Worth ISD	Andrew Carter	817-306-4290	acarter@lwisd.org	19/10%	
3.	Leon County	David Ferguson	903-388-4066	dqferg57@hotmail.com	16/10%	
4.	Birdville ISD	James Hawthorne	817-547-3954	james.hawthorne@birdvilleschool.net	2/10%	
5.	Pleasonton ISD	Rebecka Turner	830-569-1200	rlturner@pisd.us	1/10%	

Do you ever modify your written policies or standard governmental sales practices as identified in the above chart to give better discounts (lower prices) than indicated? **YES** ☐ **NO** ☒ If YES, please explain:

By signature below, I certify that the above is true and correct and that I am authorized by my company to make this certification.

Big Ass Fans
Company Name

Joe Miller
Signature of Authorized Company Official

Joe Miller, General Counsel
Printed Name

BuyBoard®
Cooperative Purchasing
12007 Research Boulevard • Austin, Texas 78759-2439 • PH: 800-695-2919 • FAX: 800-211-5454 • buyboard.com

MARKETING STRATEGY

For your Proposal to be considered, you must submit the Marketing Strategy you will use if the Cooperative accepts all or part of your Proposal. *(Example: Explain how your company will initially inform Cooperative members of your BuyBoard contract, and how you will continue to support the BuyBoard for the duration of the contract period.)*

Attach additional pages if necessary.

Email Campaign - Big Ass Fans will send e-blasts to all contacts on the list. Contents of e-blasts will be consistent with standard messaging to education and government clients. E-blasts content will range from white papers, case studies, product updates, and new alerts.

Direct sales campaign - Big Ass Fans will call cooperative member to generate business. These calls will be directly used to sell products over the phone or sell via personal meetings.

Big Ass Fans
Company Name

Joe Miller
Signature of Authorized Company Official

Joe Miller, General Counsel
Printed Name

CONFIDENTIAL/PROPRIETARY INFORMATION

A. Public Disclosure Laws

All Proposals, forms, documentation, or other materials submitted by Vendor to the Cooperative in response to this Proposal Invitation, including catalogs and pricelists, may be subject to the disclosure requirements of the Texas Public Information Act (Texas Government Code chapter 552.001, *et. seq.*) or similar disclosure law. Proposer must clearly identify on this form any information in its Proposal (including forms, documentation, or other materials submitted with the Proposal) that Proposer considers proprietary or confidential. If Proposer fails to properly identify the information, the Cooperative shall have no obligation to notify Vendor or seek protection of such information from public disclosure should a member of the public or other third party request access to the information under the Texas Public Information Act or similar disclosure law. Proposer will be notified of any third party request for information in a Proposal that Proposer has identified in this form as proprietary or confidential.

Does your Proposal (including forms, documentation, or other materials submitted with the Proposal) contain information which Vendor considers proprietary or confidential?

Please check (√) one of the following:

☐ **NO**, I certify that none of the information included with this Proposal is considered confidential or proprietary.

☒ **YES**, I certify that this Proposal contains information considered confidential or proprietary and all such information is specifically identified on this form.

If you responded "YES", you must identify below the specific information you consider confidential or proprietary. List each page number, form number, or other information sufficient to make the information readily identifiable. The Cooperative and its Administrator will not be responsible for a Proposer's failure to clearly identify information considered confidential or proprietary. Further, by submitting a Proposal, Proposer acknowledges that the Cooperative and its Administrator will disclose information when required by law, even if such information has been identified herein as information the vendor considers confidential or proprietary.

Confidential / Proprietary Information:

Volume sold and percentage discount given to entities who purchase through Federal General Services Administration contract is considered confidential information. All price catalogs are to only be shared with BuyBoard members and administrators. Catalogs are not intended to be shared with the general public.

(Attach additional sheets if needed.)

B. Copyright Information

Does your Proposal (including forms, documentation, or other materials submitted with the Proposal) contain copyright information?

Please check (√) one of the following:

☒ **NO,** Proposal (including forms, documentation, or other materials submitted with the Proposal) does not contain copyright information.

☐ **YES,** Proposal (including forms, documentation, or other materials submitted with the Proposal) does contain copyright information.

If you responded "YES", identify below the specific documents or pages containing copyright information.

Copyright Information: _____

_____

_____

(Attach additional sheets if needed.)

C. Consent to Release Confidential/Proprietary/Copyright Information to BuyBoard Members

BuyBoard members (Cooperative and nonprofit members) seeking to make purchases through the BuyBoard may wish to view information included in the Proposals of awarded Vendors. If you identified information on this form as confidential, proprietary, or subject to copyright, and you are awarded a BuyBoard contract, your acceptance of the BuyBoard contract award constitutes your consent to the disclosure of such information to BuyBoard members, including posting of such information on the secure BuyBoard website for members. Note: Neither the Cooperative nor its Administrator will be responsible for the use or distribution of information by BuyBoard members or any other party.

D. Consent to Release Proposal Tabulation

Notwithstanding anything in this Confidential/Proprietary Information form to the contrary, by submitting a Proposal, Vendor consents and agrees that, upon Contract award, the Cooperative may publically release, including posting on the public BuyBoard website, a copy of the proposal tabulation for the Contract including Vendor name; proposed catalog/pricelist name(s); proposed percentage discount(s), hourly labor rate(s), or other specified pricing; and Vendor award or non-award information.

By signature below, I certify that the information in this form is true, complete, and accurate and that I am authorized by my company to make this certification and all consents and agreements contained herein.

Big Ass Fans
Company Name

Joe Miller
Signature of Authorized Company Official

Joe Miller, General Counsel
Printed Name

July 10, 2020
Date

BuyBoard® Cooperative Purchasing
12007 Research Boulevard • Austin, Texas 78759-2439 · PH: 800-695-2919 • FAX: 800-211-5454 • buyboard.com

VENDOR BUSINESS NAME

By submitting a Proposal, Proposer is seeking to enter into a legal contract with the Cooperative. As such, a Proposer must be an individual or legal business entity capable of entering into a binding contract. Proposers, must completely and accurately provide the information requested below or your Proposal may be deemed non-responsive.

Name of Proposing Company: Delta T, LLC

(List the legal name of the company seeking to contract with the Cooperative. Do NOT list an assumed name, dba, aka, etc. here. Such information may be provided below. If you are submitting a joint proposal with another entity to provide the same proposed goods or services, each submitting entity should complete a separate vendor information form. Separately operating legal business entities, even if affiliated entities, which propose to provide goods or services separately must submit their own Proposals.)

Please check (√) one of the following:

Type of Business:

Individual/Sole Proprietor ____
Corporation ____
Limited Liability Company x
Partnership ____
Other ____ If other, identify ____

State of Incorporation (if applicable): Kentucky

Federal Employer Identification Number: 82-3022782
(Vendor must include a completed IRS W-9 form with their proposal)

List the Name(s) by which Vendor, if awarded, wishes to be identified on the BuyBoard: *(Note: If different than the Name of Proposing Company listed above, only valid trade names (dba, aka, etc.) of the Proposing Company may be used and a copy of your Assumed Name Certificate(s), if applicable, must be attached.)*

Big Ass Fans

Form **W-9**
(Rev. November 2017)
Department of the Treasury
Internal Revenue Service

Request for Taxpayer Identification Number and Certification

▶ Go to *www.irs.gov/FormW9* for instructions and the latest information.

Give Form to the requester. Do not send to the IRS.

Print or type. See Specific Instructions on page 3.

1 Name (as shown on your income tax return). Name is required on this line; do not leave this line blank

BIG ASS HOLDING, LLC

2 Business name/disregarded entity name, if different from above

DELTA T, LLC - D/B/A BIG ASS FANS, BIG ASS SOLUTIONS, HAIKU HOME

3 Check appropriate box for federal tax classification of the person whose name is entered on line 1 Check only one of the following seven boxes.

☐ Individual/sole proprietor or single-member LLC ☐ C Corporation ☐ S Corporation ☐ Partnership ☐ Trust/estate

☑ Limited liability company. Enter the tax classification (C=C corporation, S=S corporation, P=Partnership) ▶ P

Note: Check the appropriate box in the line above for the tax classification of the single-member owner. Do not check LLC if the LLC is classified as a single-member LLC that is disregarded from the owner unless the owner of the LLC is another LLC that is **not** disregarded from the owner for U.S. federal tax purposes. Otherwise, a single-member LLC that is disregarded from the owner should check the appropriate box for the tax classification of its owner

☐ Other (see instructions) ▶

4 Exemptions (codes apply only to certain entities, not individuals; see instructions on page 3):

Exempt payee code (if any) N/A

Exemption from FATCA reporting code (if any) N/A

(Applies to accounts maintained outside the U.S.)

5 Address (number, street, and apt. or suite no.) See instructions

PO BOX 638767

Requester's name and address (optional)

6 City, state, and ZIP code

CINCINNATI, OH 45263-8767

7 List account number(s) here (optional)

Part I Taxpayer Identification Number (TIN)

Enter your TIN in the appropriate box. The TIN provided must match the name given on line 1 to avoid backup withholding. For individuals, this is generally your social security number (SSN). However, for a resident alien, sole proprietor, or disregarded entity, see the instructions for Part I, later. For other entities, it is your employer identification number (EIN). If you do not have a number, see *How to get a TIN*, later.

Note: If the account is in more than one name, see the instructions for line 1. Also see *What Name and Number To Give the Requester* for guidelines on whose number to enter.

Social security number

☐☐☐ - ☐☐ - ☐☐☐☐

or

Employer identification number

8 2 - 3 0 2 2 7 8 2

Part II Certification

Under penalties of perjury, I certify that:

1. The number shown on this form is my correct taxpayer identification number (or I am waiting for a number to be issued to me); and
2. I am not subject to backup withholding because: (a) I am exempt from backup withholding, or (b) I have not been notified by the Internal Revenue Service (IRS) that I am subject to backup withholding as a result of a failure to report all interest or dividends, or (c) the IRS has notified me that I am no longer subject to backup withholding; and
3. I am a U.S. citizen or other U.S. person (defined below); and
4. The FATCA code(s) entered on this form (if any) indicating that I am exempt from FATCA reporting is correct.

Certification instructions. You must cross out item 2 above if you have been notified by the IRS that you are currently subject to backup withholding because you have failed to report all interest and dividends on your tax return. For real estate transactions, item 2 does not apply. For mortgage interest paid, acquisition or abandonment of secured property, cancellation of debt, contributions to an individual retirement arrangement (IRA), and generally, payments other than interest and dividends, you are not required to sign the certification, but you must provide your correct TIN. See the instructions for Part II, later.

Sign Here Signature of U.S. person ▶ [signature] Date ▶ 1/10/2020

General Instructions

Section references are to the Internal Revenue Code unless otherwise noted.

Future developments. For the latest information about developments related to Form W-9 and its instructions, such as legislation enacted after they were published, go to *www.irs.gov/FormW9.*

Purpose of Form

An individual or entity (Form W-9 requester) who is required to file an information return with the IRS must obtain your correct taxpayer identification number (TIN) which may be your social security number (SSN), individual taxpayer identification number (ITIN), adoption taxpayer identification number (ATIN), or employer identification number (EIN), to report on an information return the amount paid to you, or other amount reportable on an information return. Examples of information returns include, but are not limited to, the following:

- Form 1099-INT (interest earned or paid)
- Form 1099-DIV (dividends, including those from stocks or mutual funds)
- Form 1099-MISC (various types of income, prizes, awards, or gross proceeds)
- Form 1099-B (stock or mutual fund sales and certain other transactions by brokers)
- Form 1099-S (proceeds from real estate transactions)
- Form 1099-K (merchant card and third party network transactions)
- Form 1098 (home mortgage interest), 1098-E (student loan interest), 1098-T (tuition)
- Form 1099-C (canceled debt)
- Form 1099-A (acquisition or abandonment of secured property)

Use Form W-9 only if you are a U.S. person (including a resident alien), to provide your correct TIN.

If you do not return Form W-9 to the requester with a TIN, you might be subject to backup withholding. See What is backup withholding, *later.*

EDGAR VENDOR CERTIFICATION

(2 CFR Part 200 and Appendix II)

When a Cooperative member seeks to procure goods and services using funds under a federal grant or contract, specific federal laws, regulations, and requirements may apply in addition to those under state law. This includes, but is not limited to, the procurement standards of the Uniform Administrative Requirements, Cost Principles and Audit Requirements for Federal Awards, 2 CFR 200 (sometimes referred to as the "Uniform Guidance" or new "EDGAR"). All Vendors submitting proposals must complete this EDGAR Certification Form regarding Vendor's willingness and ability to comply with certain requirements which *may* be applicable to specific Cooperative member purchases using federal grant funds. This completed form will be made available to Cooperative members for their use while considering their purchasing options when using federal grant funds. Cooperative members may also require Vendors to enter into ancillary agreements, in addition to the BuyBoard contract's general terms and conditions, to address the member's specific contractual needs, including contract requirements for a procurement using federal grants or contracts.

For each of the items below, Vendor should certify Vendor's agreement and ability to comply, where applicable, by having Vendor's authorized representative complete and initial the applicable boxes and sign the acknowledgment at the end of this form. If you fail to complete any item in this form, the Cooperative will consider and may list the Vendor's response on the BuyBoard as "NO," the Vendor is unable or unwilling to comply. A "NO" response to any of the items may, if applicable, impact the ability of a Cooperative member to purchase from the Vendor using federal funds.

---

1. Vendor Violation or Breach of Contract Terms:

Contracts for more than the Simplified Acquisition Threshold, which is the inflation adjusted amount determined by the Civilian Agency Acquisition Council and the Defense Acquisition Regulations Council (Councils) as authorized by 41 USC 1908, must address administrative, contractual, or legal remedies in instances where contractors violate or breach contract terms, and provide for such sanctions and penalties as appropriate.

Provisions regarding Vendor default are included in the BuyBoard General Terms and Conditions, including Section E.18, Remedies for Default and Termination of Contract. Any Contract award will be subject to such BuyBoard General Terms and Conditions, as well as any additional terms and conditions in any Purchase Order, Cooperative member ancillary contract, or Member Construction Contract agreed upon by Vendor and the Cooperative member which must be consistent with and protect the Cooperative member at least to the same extent as the BuyBoard Terms and Conditions.

The remedies under the Contract are in addition to any other remedies that may be available under law or in equity. By submitting a Proposal, you agree to these Vendor violation and breach of contract terms.

---

2. Termination for Cause or Convenience:

For any Cooperative member purchase or contract in excess of $10,000 made using federal funds, you agree that the following term and condition shall apply:

The Cooperative member may terminate or cancel any purchase order under this Contract at any time, with or without cause, by providing seven (7) business days advance written notice to the Vendor. If this Agreement is terminated in accordance with this Paragraph, the Cooperative member shall only be required to pay Vendor for goods or services delivered to the Cooperative member prior to the termination and not otherwise returned in accordance with Vendor's return policy. If the Cooperative member has paid Vendor for goods or services not yet provided as of the date of termination, Vendor shall immediately refund such payment(s).

If an alternate provision for termination of a Cooperative member purchase for cause and convenience, including the manner by which it will be effected and the basis for settlement, is included in the Cooperative member's purchase order, ancillary agreement, or Member Construction Contract agreed to by the Vendor, the Cooperative member's provision shall control.

3. Equal Employment Opportunity:

Except as otherwise provided under 41 CFR Part 60, all Cooperative member purchases or contracts that meet the definition of "federally assisted construction contract" in 41 CFR Part 60-1.3 shall be deemed to include the equal opportunity clause provided under 41 CFR 60-1.4(b), in accordance with Executive Order 11246, "Equal Employment Opportunity" (30 FR 12319, 12935, 3 CFR Part, 1964-1965 Comp., p. 339), as amended by Executive Order 11375, "Amending Executive Order 11246 Relating to Equal Employment Opportunity," and implementing regulations at 41 CFR Part 60, "Office of Federal Contract Compliance Programs, Equal Employment Opportunity, Department of Labor."

The equal opportunity clause provided under 41 CFR 60-1.4(b) is hereby incorporated by reference. Vendor agrees that such provision applies to any Cooperative member purchase or contract that meets the definition of "federally assisted construction contract" in 41 CFR Part 60-1.3 and Vendor agrees that it shall comply with such provision.

4. Davis-Bacon Act:

When required by Federal program legislation, Vendor agrees that, for all Cooperative member prime construction contracts/purchases in excess of $2,000, Vendor shall comply with the Davis-Bacon Act (40 USC 3141-3144, and 3146-3148) as supplemented by Department of Labor regulations (29 CFR Part 5, "Labor Standards Provisions Applicable to Contracts Covering Federally Financed and Assisted Construction"). In accordance with the statute, Vendor is required to pay wages to laborers and mechanics at a rate not less than the prevailing wages specified in a wage determinate made by the Secretary of Labor. In addition, Vendor shall pay wages not less than once a week.

Current prevailing wage determinations issued by the Department of Labor are available at wdol.gov. Vendor agrees that, for any purchase to which this requirement applies, the award of the purchase to the Vendor is conditioned upon Vendor's acceptance of the wage determination.

Vendor further agrees that it shall also comply with the Copeland "Anti-Kickback" Act (40 USC 3145), as supplemented by Department of Labor regulations (29 CFR Part 3, "Contractors and Subcontractors on Public Building or Public Work Financed in Whole or in Part by Loans or Grants from the United States"). The Act provides that each contractor or subrecipient must be prohibited from inducing, by any means, any person employed in the construction, completion, or repair of public work, to give up any part of the compensation to which he or she is otherwise entitled.

5. Contract Work Hours and Safety Standards Act:

Where applicable, for all Cooperative member contracts or purchases in excess of $100,000 that involve the employment of mechanics or laborers, Vendor agrees to comply with 40 USC 3702 and 3704, as supplemented by Department of Labor regulations (29 CFR Part 5). Under 40 USC 3702 of the Act, Vendor is required to compute the wages of every mechanic and laborer on the basis of a standard work week of 40 hours. Work in excess of the standard work week is permissible provided that the worker is compensated at a rate of not less than one and a half times the basic rate of pay for all hours worked in excess of 40 hours in the work week. The requirements of 40 USC 3704 are applicable to construction work and provide that no laborer or mechanic must be required to work in surroundings or under working conditions which are unsanitary, hazardous or dangerous. These requirements do not apply to the purchases of supplies or materials or articles ordinarily available on the open market, or contracts for transportation or transmission of intelligence.

6. Right to Inventions Made Under a Contract or Agreement:

If the Cooperative member's Federal award meets the definition of "funding agreement" under 37 CFR 401.2(a) and the recipient or subrecipient wishes to enter into a contract with a small business firm or nonprofit organization regarding the substitution of parties, assignment or performance or experimental, developmental, or research work under that "funding agreement," the recipient or subrecipient must comply with the requirements of 37 CFR Part 401, "Rights to Inventions Made by Nonprofit Organizations and Small Business Firms Under Government Grants, Contracts and Cooperative Agreements," and any implementing regulations issued by the awarding agency.

Vendor agrees to comply with the above requirements when applicable.

7. Clean Air Act and Federal Water Pollution Control Act:
Clean Air Act (42 USC 7401-7671q.) and the Federal Water Pollution Control Act (33 USC 1251-1387), as amended – Contracts and subgrants of amounts in excess of $150,000 must contain a provision that requires the non-Federal award to agree to comply with all applicable standards, orders, or regulations issued pursuant to the Clean Air Act (42 USC 7401-7671q.) and the Federal Water Pollution Control Act, as amended (33 USC 1251-1387). Violations must be reported to the Federal awarding agency and the Regional Office of the Environmental Protection Agency (EPA).

When required, Vendor agrees to comply with all applicable standards, orders, or regulations issued pursuant to the Clean Air Act and the Federal Water Pollution Control Act.

---

8. Debarment and Suspension:
Debarment and Suspension (Executive Orders 12549 and 12689) – A contract award (see 2 CFR 180.220) must not be made to parties listed on the government-wide exclusions in the System for Award Management (SAM), in accordance with the OMB guidelines at 2 CFR 180 that implement Executive Orders 12549 (3 CFR Part 1966 Comp. p. 189) and 12689 (3 CFR Part 1989 Comp. p. 235), "Debarment and Suspension." SAM Exclusions contains the names of parties debarred, suspended, or otherwise excluded by agencies, as well as parties declared ineligible under statutory or regulatory authority other than Executive Order 12549.

Vendor certifies that Vendor is not currently listed on the government-wide exclusions in SAM, is not debarred, suspended, or otherwise excluded by agencies or declared ineligible under statutory or regulatory authority other than Executive Order 12549. Vendor further agrees to immediately notify the Cooperative and all Cooperative members with pending purchases or seeking to purchase from Vendor if Vendor is later listed on the government-wide exclusions in SAM, or is debarred, suspended, or otherwise excluded by agencies or declared ineligible under statutory or regulatory authority other than Executive Order 12549.

---

9. Byrd Anti-Lobbying Amendment:
Byrd Anti-Lobbying Amendment (31 USC 1352) -- Vendors that apply or bid for an award exceeding $100,000 must file the required certification. Each tier certifies to the tier above that it will not and has not used Federal appropriated funds to pay any person or organization for influencing or attempting to influence an officer or employee of any agency, a member of Congress, officer or employee of Congress, or an employee of a member of Congress in connection with obtaining any Federal contract, grant or any other award covered by 31 USC 1352. Each tier must also disclose any lobbying with non-Federal funds that takes place in connection with obtaining any Federal award. Such disclosures are forwarded from tier to tier up to the non-Federal award. As applicable, Vendor agrees to file all certifications and disclosures required by, and otherwise comply with, the Byrd Anti-Lobbying Amendment (31 USC 1352).

---

10. Procurement of Recovered Materials:
For Cooperative member purchases utilizing Federal funds, Vendor agrees to comply with Section 6002 of the Solid Waste Disposal Act, as amended by the Resource Conservation and Recovery Act where applicable and provide such information and certifications as a Cooperative member may require to confirm estimates and otherwise comply. The requirements of Section 6002 include procuring only items designated in guidelines of the Environmental Protection Agency (EPA) at 40 CFR Part 247 that contain the highest percentage of recovered materials practicable, consistent with maintaining a satisfactory level of competition, where the purchase price of the item exceeds $10,000 or the value of the quantity acquired during the preceding fiscal year exceeded $10,000; procuring solid waste management services in a manner that maximizes energy and resource recovery, and establishing an affirmative procurement program for procurement of recovered materials identified in the EPA guidelines.

---

11. Profit as a Separate Element of Price:
For purchases using federal funds in excess of the Simplified Acquisition Threshold, a Cooperative member may be required to negotiate profit as a separate element of the price. See, 2 CFR 200.323(b). When required by a Cooperative member, Vendor agrees to provide information and negotiate with the Cooperative member regarding profit as a separate element of the price for a particular purchase. However, Vendor agrees that the total price, including profit, charged by Vendor to the Cooperative member shall not exceed the awarded pricing, including any applicable discount, under Vendor's Cooperative Contract.

12. General Compliance and Cooperation with Cooperative Members:
In addition to the foregoing specific requirements, Vendor agrees, in accepting any Purchase Order from a Cooperative member, it shall make a good faith effort to work with Cooperative members to provide such information and to satisfy such requirements as may apply to a particular Cooperative member purchase or purchases including, but not limited to, applicable recordkeeping and record retention requirements.

Vendor Certification Item No.	Vendor Certification: **YES**, I agree or **NO**, I do NOT agree	Initial
1. Vendor Violation or Breach of Contract Terms	X	
2. Termination for Cause or Convenience	X	
3. Equal Employment Opportunity	X	
4. Davis-Bacon Act	X	
5. Contract Work Hours and Safety Standards Act	X	
6. Right to Inventions Made Under a Contract or Agreement	X	
7. Clean Air Act and Federal Water Pollution Control Act	X	
8. Debarment and Suspension	X	
9. Byrd Anti-Lobbying Amendment	X	
10. Procurement of Recovered Materials	X	
11. Profit as a Separate Element of Price	X	
12. General Compliance and Cooperation with Cooperative Members	X	

By signature below, I certify that the information in this form is true, complete, and accurate and that I am authorized by my company to make this certification and all consents and agreements contained herein.

Big Ass Fans
Company Name

Joe Miller
Signature of Authorized Company Official

Joe Miller, General Counsel
Printed Name

PROPOSAL INVITATION QUESTIONNAIRE

The Cooperative will use your responses to the questions below in evaluating your Proposal and technical and financial resources to provide the goods and perform the services ("Work") under the BuyBoard contract contemplated by this Proposal Invitation ("Contract"). Proposers must fully answer each question, numbering your responses to correspond to the questions/numbers below. Proposers must complete below or attach your responses to this questionnaire, sign where indicated below, and submit the signed questionnaire and your responses to all questions in one document with your Proposal. **You must submit the signed questionnaire and responses with your Proposal or the Proposal will not be considered.**

1. List the number of years Proposer has been in business and former business names (if applicable). Note whether your company is currently for sale or involved in any transaction that would significantly alter its business or result in acquisition by another entity.

26 Years

Delta T Corporation dba Big Ass Solutions

2. Describe Proposer's direct experience (not as a subcontractor) performing the work proposed under this contract. Include a brief description of the projects you have completed for Texas governmental entities in the last 5 years, and include for each the project name, scope, value, and date, and the name of the procuring government entity and entity contact person. Identify the contracts that best represent Proposer's capabilities relative to this contract.

St. Phillips Alamo Community College - $127k. Surveyed and scoped the facility for a fan recommendation. Had fans onsite and installed in a timely manner based on their schedule. Our capabilities include surveying the facility, providing a 3D layout with CFD analysis, producing and installing the fans in a timely manner.

3. Describe the resources Proposer has to manage staff and successfully perform the Work contemplated under this Contract. State the number and summarize the experience of company personnel who may be utilized for the Work, including those who will be available to Cooperative members for assistance with project development, technical issues, and product selection for Work associated with this Contract.

BAF has a trained sales staff that directly works with Education and Government divisions. BAF also has a national network of certified installers who complete all work in timely and efficient manners.

4. The Contract does not include architectural or engineering services, which must be procured separately, outside of the Cooperative, in accordance with Chapter 2254 of the Texas Government Code (Professional Services Procurement Act). If you are performing work under the contract on a project that requires the services of an architect or professional engineer, how will you work with a Cooperative member and its designated architect or engineer with respect to services that must be procured outside the contract?

BAF works with a structural engineering firm that will provide any structural drawings needed.

5. Describe the tasks and functions that can be completed by Proposer in-house without the use of a subcontractor or other third party.

BAF has Field Sales Rep across the country who can survey facilities to make fan recommendations.

BAF also has a network of certified installers who will perform the installation of the products.

6. Describe Proposer's financial capability to perform the Contract. State or describe the firm's financial strength and rating, bonding capacity, and insurance coverage limits. State whether the firm, or any of the firm's past or present owners, principal shareholders or stockholders, or officers, have been a debtor party to a bankruptcy, receivership, or insolvency proceeding in the last 7 years, and identify any such debtor party by name and relationship to or position with your firm.

Please see attached bank reference letter.

7. Does your company have any outstanding financial judgments and/or is it currently in default on any loan or financing agreement? If so, provide detailed information on the nature of such items and prospects for resolution.

N/A

8. List all contracts, if any, in the last 10 years on which Proposer has defaulted, failed to complete or deliver the work, or that have been terminated for any reason. Include any contract for which the surety was notified of a potential claim in regards to a payment or performance bond. For each such contract, provide the project name, scope, value and date and the name of the procuring entity. Fully explain the circumstances of the default, notice to surety, failure to complete or deliver the work, or termination.

N/A

9. List all litigation or other legal proceedings (including arbitration proceedings and/or claims filed with a surety in regards to a payment or performance bond), if any, in the last 10 years brought against your firm, or any of the firm's past or present owners, principal shareholders or stockholders, officers, agents or employees, that relates to or arises from a contract similar to this Contract or the work contemplated under this Contract. Provide the style of the lawsuit or proceeding (name of parties and court or tribunal in which filed), if applicable, nature of the claim, and resolution or current status.

A small number of cases brought, however, none of those relate to our products or services.

10. Describe in detail the quality control system Proposer will use, including third party auditing certification, to support the long-term performance and structural strength of the products to be used in a project under the Contract.

Our fans are one of a small number of fan manufacturers that have been tested and certified by AMCA.

11. If the work will require Proposer to tender performance or payment bonds, provide the name of the bonding company or surety that will issue such bonds.

N/A

12. Describe in detail all documented safety issues, if any, that have involved Proposer in the last three (3) years related to the type of work contemplated under this contract. Provide a 3-year history of your firm's workers compensation experience modifier.

N/A

By signature below, I certify that the information contained in and/or attached to this Proposal Invitation Questionnaire in response to the above questions is true and correct and that I am authorized by my company to make this certification.

Big Ass Fans
Company Name

Joe Miller
Signature of Authorized Company Official

BuyBoard® Cooperative Purchasing
12007 Research Boulevard • Austin, Texas 78759-2439 · PH: 800-695-2919 • FAX: 800-211-5454 • buyboard.com

REQUIRED FORMS CHECKLIST

(Please check (√) the following)

- ☐ Completed: **Proposer's Agreement and Signature**
- ☐ Completed: **Vendor Contact Information**
- ☐ Completed: **Felony Conviction Disclosure and Debarment Certification**
- ☐ Completed: **Resident/Nonresident Certification**
- ☐ Completed: **No Israel Boycott Certification**
- ☐ Completed: **No Excluded Nation or Foreign Terrorist Organization Certification**
- ☐ Completed: **Historically Underutilized Business (HUB) Certification**)
- ☐ Completed: **Construction Related Goods and Services Affirmation**
- ☐ Completed: **Deviation/Compliance**
- ☐ Completed: **Location/Authorized Seller Listings**
- ☐ Completed: **Manufacturer Dealer Designation**
- ☐ Completed: **Texas Regional Service Designation**
- ☐ Completed: **State Service Designation**
- ☐ Completed: **National Purchasing Cooperative Vendor Award Agreement**
- ☐ Completed: **Federal and State/Purchasing Cooperative Experience**
- ☐ Completed: **Governmental References**
- ☐ Completed: **Marketing Strategy**
- ☐ Completed: **Confidential/Proprietary Information**
- ☐ Completed: **Vendor Business Name with IRS Form W-9**
- ☐ Completed: **EDGAR Vendor Certification**
- ☐ Completed: **Proposal Invitation Questionnaire**
- ☐ Completed: **Proposal Specifications** *(Discount (%) off Catalog/Pricelist and/or other required pricing information including Catalogs/Pricelists (or no bid response) must be submitted with proposal response or response will not be considered.),* ***Manufacturer Authorization Letters and License***
- ☐ Completed: **Required Forms Checklist**

BuyBoard®
Cooperative Purchasing
12007 Research Boulevard • Austin, Texas 78759-2439 · PH: 800-695-2919 • FAX: 800-211-5454 • buyboard.com

PROPOSAL SPECIFICATION SUMMARY

The categories and items specified for this Proposal Invitation are summarized below. For full Proposal Specifications, you must review and complete the Proposal Specification information in the electronic proposal submission system in accordance with the Instructions to Proposers (or, if submitting a hard copy Proposal, timely request and complete the Proposal Specification Form in accordance with the Instructions to Proposers).

Section I: Equipment, Products, and Supplies

1. Discount (%) off catalog/pricelist for **HVAC Equipment** (all types - rooftop units, split systems, chillers, compressors, cooling towers, heat pumps, furnaces, unit heaters, duct furnaces, and related items).
2. Discount (%) off catalog/pricelist for **HVAC Controls, Software and Monitoring Systems** (all types).
3. Discount (%) off catalog/pricelist for **HVAC Air Handling Products** (all types - coils, fans, and related items).
4. Discount (%) off catalog/pricelist for **HVAC Supplies** (all types).
5. Discount (%) off catalog/pricelist for **HVAC Filters** (all types).
6. Discount (%) off catalog/pricelist for **HVAC Indoor Air Quality Products** (all types).
7. Discount (%) off catalog/pricelist for **HVAC Repair Parts** (all types).
8. Discount (%) off catalog/pricelist for **HVAC Refrigerants** (all types).
9. Discount (%) off catalog/pricelist for **HVAC Refrigerant Recovery Equipment** (all types).
10. Discount (%) off catalog/pricelist for **UVC Emitters/Lamps** (used to incorporate downstream of all cooling coils and above all drain pans to control airborne and surface microbial growth and transfer. Fixtures and lamps must be manufactured for this purpose and safety interlocks/features shall be provided to limit hazard to operating staff).
11. Discount (%) off catalog/pricelist for **Insulation Products for HVAC Equipment.**
12. Discount (%) off catalog/pricelist for **HVAC Maintenance Agreements.**

Section II: Installation and Repair Service

13. **Hourly Labor Rate for Installation of HVAC Filter Change Out Service** (including labor, filters and removal/ disposal of product), not to exceed hourly labor rate for Installation of HVAC Filter Products.
14. **Standard Hourly Labor Rate for Installation/Repair Service of HVAC Equipment and Products,** not to exceed standard hourly labor rate for Installation/Repair Service of HVAC Equipment and Products.
15. **Non-Standard Hourly Labor Rate for Installation/Repair Service of HVAC Equipment and Products**, not to exceed non-standard hourly labor rate for Installation of HVAC Equipment and Products.
16. **Coefficient for Standard Hours of Installation/Repair Service of HVAC Equipment and Products** - RSMeans Cost Data from the Total INCL O&P column (most current edition).
17. **Coefficient for Non-Standard Hours for Installation/Repair Service of HVAC Equipment and Products** - RSMeans Cost Data from the Total INCL O&P column (most current edition).

Line #	Type	Line Description	Big Ass Solutions (Delta T. Corporation)
1	State Name of Catalog/Pricelist	Section I: Equipment, Products, and Supplies- Discount (%) off catalog/pricelist for HVAC Equipment (all types - rooftop units, split systems, chillers, compressors, cooling towers, heat pumps, furnaces, unit heaters, duct furnaces, and related items). Catalog/Pricelist MUST be included or proposal will not be considered.	Pricelist is attached.
1	Exceptions to Discount		
2	State Name of Catalog/Pricelist	Section I: Equipment, Products, and Supplies- Discount (%) off catalog/pricelist for HVACControls, Software and Monitoring Systems(all types). Catalog/Pricelist MUST be included or proposal will not be considered.	
2	Exceptions to Discount		
3	State Name of Catalog/Pricelist	Section I: Equipment, Products, and Supplies- Discount (%) off catalog/pricelist for HVAC Air Handling Products (all types - coils, fans, and related items). Catalog/Pricelist MUST be included or proposal will not be considered.	Pricelist is attached.
3	Exceptions to Discount		
4	Exceptions to Discount		
5	State Name of Catalog/Pricelist	Section I: Equipment, Products, and Supplies- Discount (%) off catalog/pricelist for HVAC Filters(all types). Catalog/Pricelist MUST be included or proposal will not be considered.	
5	Exceptions to Discount		
6	State Name of Catalog/Pricelist	Section I: Equipment, Products, and Supplies- Discount (%) off catalog/pricelist for HVAC Indoor Air Quality Products (all types). Catalog/Pricelist MUST be included or proposal will not be considered.	Pricelist is attached.
6	Exceptions to Discount		
7	State Name of Catalog/Pricelist	Section I: Equipment, Products, and Supplies- Discount (%) off catalog/pricelist for HVAC Repair Parts (all types). Catalog/Pricelist MUST be included or proposal will not be considered.	
7	Exceptions to Discount		

Line #	Type	Line Description	Big Ass Solutions (Delta T. Corporation)
8	State Name of Catalog/Pricelist	Section I: Equipment, Products, and Supplies- Discount (%) off catalog/pricelist for HVACRefrigerants (all types). Catalog/Pricelist MUST be included or proposal will not be considered.	
8	Exceptions to Discount		
9	State Name of Catalog/Pricelist	Section I: Equipment, Products, and Supplies- Discount (%) off catalog/pricelist for HVACRefrigerant Recovery Equipment(all types). Catalog/Pricelist MUST be included or proposal will not be considered.	
9	Exceptions to Discount		
10	State Name of Catalog/Pricelist	Section I: Equipment, Products, and Supplies- Discount (%) off catalog/pricelist for UVC Emitters/Lamps (used to incorporate downstream of all cooling coils andabove all drain pans to control airborne and surface microbial growth and transfer. Fixtures and lamps must be manufactured for this purpose and safety interlocks/features shall be provided to limit hazard to operating staff). Catalog/Pricelist MUST be included or proposal will not be considered.	Pricelist is attached.
10	Exceptions to Discount		
11	State Name of Catalog/Pricelist	Section I: Equipment, Products, and Supplies- Discount (%) off catalog/pricelist for Insulation Products for HVAC Equipment. Catalog/Pricelist MUST be included or proposal will not be considered.	
11	Exceptions to Discount		
12	State Name of Catalog/Pricelist	Section I: Equipment, Products, and Supplies- Discount (%) off catalog/pricelist for HVAC Maintenance Agreements. Catalog/Pricelist MUST be included or proposal will not be considered.	
12	Exceptions to Discount		
13	Detailed Information on Hourly Labor Rate	Section II: Installation and Repair Service - Hourly Labor Rate for Installation of HVAC Filter Change Out Service (including labor, filters andremoval/disposal of product), not to exceed hourly labor rate for Installation of HVAC Filter Products.	

Line #	Type	Line Description	Big Ass Solutions (Delta T. Corporation)
13	Exceptions to Hourly Labor Rate		
14	Detailed Information on Hourly Labor Rate	Section II: Installation and Repair Service - Standard Hourly Labor Rate for Installation/Repair Service of HVAC Equipment and Products, not to exceed standardhourly labor rate for Installation/Repair Service of HVAC Equipment and Products.	
14	Exceptions to Hourly Labor Rate		
15	Detailed Information on Hourly Labor Rate	Section II: Installation and Repair Service - Non-Standard Hourly Labor Rate for Installation/Repair Service of HVAC Equipment and Products, not to exceed standardhourly labor rate for Installation/Repair Service of HVAC Equipment and Products.	
15	Exceptions to Hourly Labor Rate		
16	Detailed Information on Hourly Labor Rate	Section II: Installation and Repair Service - Coefficient for Standard Hours of Installation/Repair Service of HVAC Equipment and Products - RSMeans Cost Data from the Total INCL OP column (most current edition).	
16	Exceptions to Hourly Labor Rate		
17	Detailed Information on Hourly Labor Rate	Section II: Installation and Repair Service - Coefficient for Non-Standard Hours of Installation/Repair Service of HVAC Equipment and Products - RSMeans Cost Data from the Total INCL OP column (most current edition).	
17	Exceptions to Hourly Labor Rate		

Part Number	Manufacturer Name	Contract	Category	Short Description	Unit of Measure	Price	Item L
PFX3	Powerfoil X 3.0 Plus	631-20	Industrial HVLS Ceiling Fan	The Powerfoil®X3.0 is Big Ass Fans' biggest, strongest, most durable industrial fan. Powerfoil X3.0 features a patented system of aerospace-designed airfoils and winglets, and the purpose-built sealed NitroSeal Drive gearbox requires no maintenance – ever. Powerfoil X3.0 now ships with an intuitive, easy-to-use touchscreen controller. Power has never been so easy to control. All products are subject to pricing changes or additional fees for mounting hardware, hardware customization, appearance packages, and/or installation.	EA	$8,685	https:/
PFD	Powerfoil D	631-20	Industrial HVLS Ceiling Fan	For 20 years, Big Ass industrial fans have set the standard for powerful, efficient airflow that transforms uncomfortable facilities and lowers overhead costs. We led the way with direct-drive technology 10 years ago; now we're pacing the field with Powerfoil D, the only direct-drive overhead fan purpose-built for harsh industrial conditions. In the hot, dusty environments that put competitors' fans out of commission, Powerfoil D thrives with cool, quiet operation. All products are subject to pricing changes or additional fees for mounting hardware, hardware customization, appearance packages, and/or installation.	EA	$7,020.00	https:/
B6	Basic 6	631-20	Industrial HVLS Ceiling Fan	Basic 6® is the plain and simple fan for plain, simple air movement. If you're on a modest budget, don't need a 15-year warranty and don't want the bells and whistles that make up the Powerfoil®8 and Powerfoil®X3.0, Basic 6 is the fan for you. All products are subject to pricing changes or additional fees for mounting hardware, hardware customization, appearance packages, and/or installation.	EA	$5,693	https:/

Part Number	Manufacturer Name	Contract	Category	Short Description	Unit of Measure	Price	Item U
ES	Essence	631-20	Commercial HVLS Ceiling Fan	Ranging from 8- to 14-ft. (2.4 – to 4.3m) in diameter, Essence® is both an essential money-saving machine and a work of art for commercial spaces, indoors or out. With a gearless direct-drive motor that provides quiet, comforting air movement, Essence is ideal for any space from lobbies, pavilions and music venues to seaside dining and open-air theaters. All products are subject to pricing changes or additional fees for mounting hardware, hardware customization, appearance packages, and/or installation.	EA	$3,866	https:/
SB18	Sweat Bee 18	631-20	Portable/Directional Fan	Sweat Bee® utilizes heavy-duty industrial components and an efficient motor to eliminate uncomfortable working conditions. Mount it to a wall or column and select any position from its 360 degree swivel and 40 degree tilt to send air exactly where it's needed – to cool employees, clear smoke and fumes or keep pesky insects away. Thoroughly tested in the world's only fan research and development laboratory, Sweat Bee will stand up to the most rigorous of industrial environments.	EA	$733	https:/
SB30	Sweat Bee 30	631-20	Portable/Directional Fan	Sweat Bee® utilizes heavy-duty industrial components and an efficient motor to eliminate uncomfortable working conditions. Mount it to a wall or column and select any position from its 360 degree swivel and 40 degree tilt to send air exactly where it's needed – to cool employees, clear smoke and fumes or keep pesky insects away. Thoroughly tested in the world's only fan research and development laboratory, Sweat Bee will stand up to the most rigorous of industrial environments.	EA	$1,125	https:/

Part Number	Manufacturer Name	Contract	Category	Short Description	Unit of Measure	Price	Item U
YJ	Yellow Jacket	631-20	Portable/Directional Fan	Yellow Jacket® is the Smashingly Durable® portable and mountable fan that takes abuse and stays in use. Available 18- (45.7cm) and 36-inch (91.4cm) pedestals allow you to direct Yellow Jacket's airflow where it's needed to keep employees comfortable. Mount it to a column or wall to get airflow in areas with no floor space. If it gets dirty, don't worry — you can spray it down with a hose to get it squeaky clean. Need to dress it up? Yellow Jacket now comes in optional white and black appearance packages.	EA	$2,034	https:/
BJ	Blackjack	631-20	Portable/Directional Fan	We designed Black Jack® with a 6.5-ft (2m) frame to fit through standard interior doors and indoor/outdoor rubber wheels that could handle any terrain. Perfect for everywhere from narrow aisles and crowded auto shops to outdoor wedding venues and fitness centers, we gave it handles on both sides, and made it light and maneuverable enough for one person to easily push around.	EA	$5,310	https:/
AG	AirGo 2.0	631-20	Portable/Directional Fan	With an 8-ft. (2.4m) diameter and 360-degree angle adjustment capabilities, AirGo®2.0 is our biggest, most versatile vertical floor fan. Its compact design and durable construction make it an ideal air movement solution in the toughest of environments. Add the optional All Terrain Package and AirGo becomes the ultimate outdoor party animal. The All Terrain's oversized tires, wider base and four-wheel steering provide increased mobility.	EA	$7,155	https:/
HL	Haiku L	631-20	Residential/Commerical Ceiling Fan	Offering unprecedented energy efficiency and silent, wobble-free operation, the 52-inch (1.3-m) Haiku® is designed to fit smaller spaces like bedrooms, hotel rooms, offices and more. Sophisticated control options include seven speeds, an optional SenseME wall control, and special settings like Whoosh® mode, that simulates a natural breezes. All products are subject to pricing changes or additional fees for mounting hardware, hardware customization, appearance packages, and/or installation.	EA	$606.60	https:/

IMPORTANT: NO HTML CODES OR SYMBOLS IN TEXT FIELDS. THEY WILL CAUSE THE UPLOAD TO FAIL. CATALOG IS UPLOADED IN PLAIN TEXT.

Required - 25 character limit	Recommended - 50 character limit, used by Search feature, Proper Case	Contract number - needed for proper upload. 7 character limit	Required - used by Search feature. 255 character limit. Proper Case	Required - used by search feature, 255 character limit, Proper Case	Recommended - can be same as Short Description, used by Search feature, 8000 character limit, Proper Case	Required - unit in which item is being sold, default is EA, 4 character limit, upper case	Optional - numeric only field, number of items making up unit	Optional, 50 character limit	Required - Numeric field only, should be BuyBoard price	Optional - link to actual item, 255 character limit
Part Number	Manufacturer Name	Contract	Category	Short Description	Full Description	Unit of Measure	Pack_Qty	Pack_Weight	Price	Item URL
PFX4	Powerfoil X4	631-20	Industrial HVLS Ceiling Fan	Driven by this spirit of innovation, Powerfoil X4 has the industry-leading airflow, safety, and performance needed to transform harsh industrial environments into comfortable conditions. Featuring a high-efficiency motor, full-fan IP56 rating, and multiple redundant safety features, Powerfoil X4 is engineered to improve indoor air quality and occupant comfort far longer than the competition.		EA			$9,747.00	https://bigassfans.com/powerfoil-x4/
PF8	Powerfoil 8	631-20	Industrial HVLS Ceiling Fan	Powerfoil®8 is a heavy-duty ceiling fan designed using industrial-grade components. It is fully factory tested prior to shipping, ensuring a perfectly functioning system backed by a 12-year limited warranty. All products are subject to pricing changes or additional fees for mounting hardware, hardware customization, appearance packages, and/or installation. All products are subject to pricing changes or additional fees for mounting hardware, hardware customization, appearance packages, and/or installation.		EA			$7,947.00	http://www.bigassfans.com/products/powerfoil-8/
PFD	Powerfoil D	631-20	Industrial HVLS Ceiling Fan	We've raised the bar on direct-drive technology with our quietest, most efficient industrial fan ever. The groundbreaking Powerfoil D delivers airflow that radically changes the way people feel and work within your space. Rated IP66 for maximum protection in demanding environments, it takes on hot, gritty conditions with ease and has the specs to excel in any facility where comfort and quiet are valued.		EA			$8,937.00	https://bigassfans.com/powerfoil-d/
B6	Basic 6	631-20	Industrial HVLS Ceiling Fan	industrial fan ever. The groundbreaking Powerfoil D delivers airflow that radically		EA			$7,137.00	http://www.bigassfans.com/products/basic-6/
ES	Essence	631-20	Commerical HVLS Ceiling Fan	changes the way people feel and work within your space. Rated IP66 for maximum		EA			$4,490.10	http://www.bigassfans.com/products/essence/
YJ	Yellow Jacket	631-20	Portable/Directional Fan	protection in demanding environments, it takes on hot, gritty conditions with ease		EA			$2,937.60	http://www.bigassfans.com/products/yellow-jacket/
BJ	Blackjack	631-20	Portable/Directional Fan	and has the specs to excel in any facility where comfort and quiet are valued.		EA			$6,749.10	http://www.bigassfans.com/products/blackjack/
AG	AirGo	631-20	Portable/Directional Fan	With an 8-ft. (2.4m) diameter and 360-degree angle adjustment capabilities, AirGo® is our biggest, most versatile vertical floor fan. Its compact design and durable construction make it an ideal air movement solution in the toughest of environments. Add the optional All Terrain Package and AirGo becomes the ultimate outdoor party animal. The All Terrain's oversized tires, wider base and four-wheel steering provide increased mobility. All products are subject to pricing changes or additional fees for mounting hardware, hardware customization, appearance packages, and/or installation.		EA			$8,999.10	http://www.bigassfans.com/products/airgo/

HL	Haiku L-Series	631-20	Commercial Ceiling Fan	Offering unprecedented energy efficiency and silent, wobble-free operation, the 52-inch (1.3-m) Haiku® is designed to fit smaller spaces like bedrooms, hotel rooms, offices and more. Sophisticated control options include seven speeds, an optional SenseME wall control, and special settings like Whoosh® mode, that simulates a natural breezes. All products are subject to pricing changes or additional fees for mounting hardware, hardware customization, appearance packages, and/or installation.	EA	$675.00	http://www.bigassfans.com/for-home/haiku/
HH	Haiku	631-20	Commercial Ceiling Fan	Haiku is handcrafted from quality materials in a variety of finishes to suit your space – pick from sustainable Moso bamboo, glass-infused matrix composite and aircraft-grade aluminum (polished or powder-coated)! No matter what material you choose, it's all backed by a lifetime warranty. All products are subject to pricing changes or additional fees for mounting hardware, hardware customization, appearance packages, and/or installation.	EA	$1,260.00	http://www.bigassfans.com/for-home/haiku/
H84	Haiku 84	631-20	Commercial Ceiling Fan	Haiku 84® brings the same technology, quality construction and style of the award-winning 60-inch (1.5-m) Haiku ceiling fan to larger spaces. The Haiku 84's aircraft-grade aluminum and Moso bamboo airfoils offer maximum durability, efficiency and style. But it's not just about looking good; Haiku 84 is incredibly efficient and operates silently, so you'll see it and feel it but never hear it. Its 84-inch (2.1-m) diameter makes it ideal for lobbies, restaurants, great rooms, patios and more. It's big. It's beautiful. It's efficient. It solves your problem. It must be a Big Ass Fan®. All products are subject to pricing changes or additional fees for mounting hardware, hardware customization, appearance packages, and/or installation.	EA	$1,935.00	http://www.bigassfans.com/for-home/haiku/
AE	AirEye	631-20	Portable/Directional Fan	AirEye delivers powerful, motion-activated airflow right where you need it, increasing comfort and productivity in any industrial space. OSHA - compliant, steel wire cage and precision balanced blades provide 20% more airflow with 10% less noise than traditional induction motors. The AirEye is rated IP65. Offered in 20", 24" and 30" diameters, the AirEye can accommodate a wide range of mounting options including Wall mount, I-Beam mount, C-Channel mount, Mobile Pedestal and Swivel Mount.	EA	$1,259.10	https://www.bigassfans.com/fans/aireye/