City of Jacksonville, Florida

Lenny Curry, Mayor

Procurement Division
Ed Ball Building
214 N. Hogan Street, Suite 800
Jacksonville, Florida 32202

ONE CITY. ONE JACKSONVILLE.

MEMORANDUM

TO: **Competitive Sealed Proposal Evaluation Committee ("CSPEC")**

FROM: **Gregory Pease, Chief of Procurement**

DATE: **April 12, 2019**

RE: **REQUEST FOR APPROVAL TO UTILIZE COMPETITIVE SEALED PROPOSAL PROCESS**

Pursuant to Chapter 126, Part 2, § 126.204, approval is requested to utilize the Competitive Sealed Proposal process to formally procure services for **CECIL FIELD AUDIO VIDEO SYSTEM.** As a follow-up to the same, the CSPEC is now requested to review and approve the solicitation documents attached hereto.

More specifically, the CSPEC is requested to review and approve the evaluation criteria as outlined in the attached Request for Proposal ("RFP"). Procurement's review in this matter has revealed that:

> The attached Certification Letter and the Scope of Services received from the using agency appear to be in order.
>
> The RFP **has been** reviewed and approved by Risk Management regarding insurance and indemnification requirements.
>
> The RFP **has been** reviewed and approved by EBO regarding JSEB participation goals and EBO recommends: Encouragement Program

It is requested that the CSPEC take these issues into consideration in its review and/or approval in this matter.

CSPEC APPROVAL

Finance Director or designee	Procurement Director or designee
General Counsel or designee	Department/Agency Representative
Public Works Director or designee	

INFORMATION TECHNOLOGIES DIVISION

CITY OF JACKSONVILLE

March 28, 2019

TO: Greg Pease, Chief of Procurement Division

JP 3/28/19 **THRU:** Kenneth Lathrop, Chief of Information Technologies / CIO Kenneth E. Lathrop

FROM: Thomas Ossi, Technology Contract and Records Manager, ITD Thomas Ossi

SUBJECT: CSPEC Memorandum - RFP for Cecil Field Audio Video System

---

The Information Technologies Division, in conjunction with the Jacksonville Sheriff's Office and Jacksonville Fire Rescue Department, requests approval to proceed with issuance of a Request for Proposal (RFP) for the subject services. ITD is proposing this RFP for new Audio Video equipment and installation services at the Cecil Backup Public Safety Answering Point. The equipment will include video displays, projector, retractable screen and infrastructure equipment required to manage solution. Technical services include project management, staging, and installation.

ITD requests permission to utilize Section 126.204 Competitive Sealed Proposal Evaluation process in order to evaluate the differences among vendor's competencies and overall costs. The evaluation criteria and maximum points (100) are provided in the evaluation matrix, Attachment B. These services will be awarded upon selection of the winning vendor and will require a formal contract through the Office of General Counsel.

Bids will be evaluated by a sub-committee consisting of the following members: Chief Kimberly Moreland, Communications Manager, JFRD, 904-630-0202; Vickie Diaz, Communications Technical Coordinator, JSO, 904-630-2316; and Michael Young, Enterprise Architect, ITD, 904-255-8007.

Your favorable consideration of this request is appreciated.

CC: Gary Steffens, Enterprise Architect Manager, ITD
Robert Mirsky, Senior Enterprise Architect, ITD

Department of Finance and Administration
Procurement Division

CITY OF JACKSONVILLE

April 9, 2019

To: Greg Pease, Division Chief
Procurement Division

From: Teresa O. Bocchieri
Jacksonville Small and Emerging Businesses (JSEB) Compliance Office

RE: **Cecil Field Audio Video System**

The Jacksonville Small and Emerging Business & Contract Compliance (JSEB) Office has reviewed the scope of work, consulted the using agency, and contacted ready, willing, and available JSEBs.

Based upon our findings, we recommend the following:

- ☒ Encouragement
- ☐ Participation
- ☐ Set-Aside %

Our outreach efforts are documented and available upon request. Please let us know if you have any questions or concerns.

If you need additional information I may be reached at (904) 255-8833.

cc: Ruben Ola
Rose Nettles

214 North Hogan Street, Suite 800 □ Jacksonville, FL 32202 □ 904-255-8840 □ Fax 904-255-8842 □ www.jseb.coj.net

Ola, Ruben

From: Willis, Ann **On Behalf Of** RiskReview
Sent: Tuesday, April 09, 2019 4:05 PM
To: Ola, Ruben; RiskReview
Cc: Ossi, Thomas; Brown, Elizabeth; Mirsky, Robert; Freeman, Dustin
Subject: RE: Risk Management Review-CECIL FIELD AUDIO VIDEO SYSTEM

Attached please find Risk Management's redline of the above RFP.
Also attached is the stamped Risk Management pdf.
Risk Management has concluded our review unless further assistance is required.

Ann Willis, AINS, CRIS
Property and Casualty Compliance Administrator
Risk Management Division
Department of Finance
City of Jacksonville
117 W Duval Street, Suite 335
Jacksonville, Fl 32202
(904) 255-5314 (o)
(904)255-5347 (f)
This e-mail transmission and/or attachment(s) is confidential and the contents are intended only for the recipient(s) named. It may contain information that is privileged, confidential and exempt from disclosure under applicable law. Any review, discussion, dissemination, distribution, or copying of this transmission (including any attachments) is strictly prohibited. If you have received this communication in error, please notify us immediately by return e-mail and delete the original message and any copies of it from your computer system. Improper disclosure of the information in this communication can result in fines and penalties under Federal, State and Local Law.

From: Ola, Ruben
Sent: Tuesday, April 9, 2019 3:46 PM
To: RiskReview <RiskReview@coj.net>
Cc: Ossi, Thomas <TOssi@coj.net>; Brown, Elizabeth <ElizabethB@coj.net>; Mirsky, Robert <RMirsky@coj.net>; Freeman, Dustin <DustinF@coj.net>
Subject: Risk Management Review-CECIL FIELD AUDIO VIDEO SYSTEM

Good Afternoon,

Attached is document request for Risk Management review and recommendation for insurance coverage of ITD-CECIL FIELD AUDIO VIDEO SYSTEM.

Thank you,

Ruben Ola, Purchasing Analyst
City of Jacksonville
Procurement Division
Finance and Administration Department
214 N. Hogan Street, Suite 800
Jacksonville, FL 32202

Competitive Sealed Proposal Evaluation Committee

PROCUREMENT DIVISION

ONE CITY. ONE JACKSONVILLE.

RFP SPECIFICATIONS

FOR

CECIL FIELD AUDIO VIDEO SYSTEM

Information Technologies Division

BID NO: ESC- [BID NO]

OPEN DATE: [OPEN DATE]

TIME: [TIME] [AM OR PM]

PLACE: 1ST FLOOR, ED BALL BUILDING. 214 N. HOGAN ST, STE #110, JACKSONVILLE, FL

MANDATORY PRE-PROPOSAL CONFERENCE:
DATE: [PRE-PROPOSAL DATE(S)]
TIME: [TIME] [AM OR PM]
LOCATION: [PRE-PROPOSAL LOCATION]

CITY OF JACKSONVILLE
Procurement Division
Ed Ball Building
214 North Hogan Street, Suite 800 (8th Floor)
Jacksonville, Florida 32202
Phone: (904) 255-8800
Fax: (904) 255-8837

Lenny Curry
Mayor

Gregory Pease, Chief
Procurement Division

REQUEST FOR PROPOSAL

CECIL FIELD AUDIO VIDEO SYSTEM
ESC- [BID NO]

For

City of Jacksonville, Florida

SECTION 1

(Specific Information Regarding this RFP)

1.1 Introduction

The City of Jacksonville ("**Buyer**") intends to hire an individual or firm ("**Contractor**") to provide the services described in Section 1.2 of this Request for Proposal ("**RFP**"). Persons interested in submitting a response to this RFP (a "**Response**") should carefully review this RFP for instructions on how to respond and for the applicable contractual terms. This RFP is divided into the following sections:

Section 1	Specific Information Regarding This RFP
Section 2	General Instructions
Section 3	General Terms and Conditions of Agreement
Section 4	Description of Services (if referenced in Section 1.2 below)
Section 5	Exhibits
Attachment A	Response Format
Attachment B	Evaluation Criteria
Attachment C	Equal Business Opportunity Program Requirements
Attachment D	Sample Contract
Attachment E	Disqualified/Probationary Vendors List
Attachment F	Indemnification
Attachment G	Insurance Requirements
Attachment H	Protest Procedures
Form 1	Price Sheet
Form 2	Conflict of Interest Certificate
Form 3	Insurance Agent Acknowledgment
Form 4	Business/Corporate References
Form 5	No Bid Survey
Exhibit A	911 BACKUP FACILITY CALL CENTER – Diagram

In the event of conflicting provisions, the following sections of this RFP will have priority in the order listed: Section 1, Section 4, Section 2, Section 3, the Attachments, and the Forms.

1.2 Scope of Services.

The services sought under this RFP are generally described as follows: The Jacksonville City Information Technologies Division (ITD) of the City of Jacksonville, Florida is requesting proposals to install net new Audio Visual (AV) Equipment System in the new Cecil Field Facility.

Section 4, **Statement of Work (SOW) Requirements.**

1.3 Term of Agreement.

The term of agreement will commence upon execution of the Contract and will continue until project has been successfully completed and signed off by the ITD Project Manager and CIO (or designee). The Contract is subject to early termination as set forth elsewhere in this RFP.

1.4 Minimum Requirements for Contractors.

Contractors must satisfy the following mandatory minimum requirements in order to have their Responses evaluated. By submitting a Response, Contractor warrants and represents that it satisfies these requirements. Failure to meet these requirements will result in the Response not being evaluated and being rejected as non-responsive:

1. Contractor must be an Audio and Video Crestron Certified Partner and A/V integration provider.
    a. The Contractor shall provide all business licenses required by local, state, and federal law as applicable.
    b. Contractor must provide proof of up to date Audio and Video Gold Partner status from Crestron.
    c. Provide resume and qualifications of the resource(s) that will be used for the project.
    d. Contractor must have local office presence to include local support.
    e. If contractor uses sub-contractor resources, they must also be certified and insured.
    f. The Contractor must provide a minimum of **three (3) contactable references** of installed systems similar in scope (see Form 4 – Business/Corporate References). The City reserves the right to contact references. Government references are encouraged.

1.5 Equal Business Opportunity Program.

It is an official policy of the City of Jacksonville to encourage the maximum participation of Jacksonville Small and Emerging Businesses (JSEBs) in its contract awards based upon availability. To participate as a JSEB on Buyer projects, a company must be certified as a JSEB with the City's Equal Business Opportunity Office.

This RFP and the resulting Contract are subject to requirements of the "Encouragement Plan," which is fully described on Attachment C to this RFP.

Contractors may contact Buyer's Equal Business Opportunity Office at 904-255-8840 or find the JSEB directory on Buyer's website. Please contact the Contact Person identified in Section 1.12 if you are uncertain of Buyer's website address or if you experience problems accessing it.

1.6 Documents Available for Inspection.

Certifications of expertise

1.7 Federal Funds.

Federal funds will not be used as part of this solicitation.

1.8 Pre-Proposal Meeting.

There **will be one** (1) mandatory pre-proposal meetings scheduled for this RFP on **[DATE]** at **[Time] [AM OR PM]** located at **[Location Address]**.

1.9 Response Due Date.

The deadline for submitting responses to this RFP is **[DATE]** at **[Time] [AM OR PM]** ET. Please see Sections 2.3 and 2.4 for more details.

1.10 Response Delivery Location.

Responses must be delivered to the following location:

City of Jacksonville
Procurement Division
214 N. Hogan Street, Room 105
Jacksonville, Florida 32202

1.11 Response Presentation (mandatory)

Vendors shall be required to provide a presentation, up to 1 hour followed by a 30-minute Q&A session. The presentations will occur one (1) week after all bids have closed, they will be recorded and will be part of the scoring process.

1.12 Response Opening.

Responses received shall be publicly announced and recorded at 2:00 PM on the Response Due Date in meeting room #110, 1st Floor, Ed Ball Bldg., 214 N. Hogan Street.

1.13 Contact Person.

If any questions arise during the request for proposal period of this Project, contact Ruben Ola, Purchasing Analyst Procurement Division, at RubenO@coj.net.

Please refer to Section 2.9 for further information on who may and may not be contacted regarding this RFP.

1.14 **Questions and Requests for Amendments**

Any questions, requests for information or requests for amendments to this RFP must be submitted in accordance with Section 2.2 of this RFP.

1.15 **Special Instructions:**

The following special instructions shall apply to this RFP and shall supersede any conflicting provisions in Section 2 (General Instructions).

1.16 **Special Contract Terms:**

The following special contract terms shall apply to this RFP and shall supersede any conflicting provisions in Section 3 (General Terms and Conditions of Agreement):

A. **Performance Standards:** **N/A**

B. **Proposal Bond:** **N/A**

C. **Performance Bond:** **N/A**

D. **Other Provisions:** The City of Jacksonville reserves the right to terminate or renegotiate the contract if there are any industry changes that i) lower the fees or ii) requires new hardware.

(Remainder of page intentionally left blank)

Section 2

General Instructions
(RFP for CSPEC Services)

Contents

2.1 **Application of Chapter 126 and Other Laws.**
2.2 **Questions and Requests for Amendment to RFP.**
2.3 **Format/Content of Responses.**
2.4 **Submission of Responses.**
2.5 **Evaluation of Responses.**
2.6 **Award of Contract**
2.7 **Terms of Agreement.**
2.8 **Public Meetings and Special Accommodations.**
2.9 **Ex-Parte Communications.**
2.10 **Cost of Developing RFP Response.**
2.11 **Response Ownership.**
2.12 **Public Records Law; Process For Protecting Trade Secrets and Other Information.**
2.13 **Multiple Responses from Same Contractor; No Collusion.**
2.14 **Conflict of Interest.**
2.15 **Convicted Vendor List.**
2.16 **Discriminatory Vendor List.**
2.17 **Contractor Representations.**
2.18 **Protests.**

2.1 **Application of Chapter 126 and Other Laws.** The selection of and contracting with a Contractor under the RFP will be in accordance with Part 2 of Chapter 126, of the Jacksonville Ordinance Code. Other provisions of federal, state, county and local laws, and administrative procedures, policies or rules may apply to the RFP and any claims or disputes arising hereunder. Lack of knowledge of the law or administrative procedures, policies, or rules by any Contractor shall not constitute a cognizable defense against their effect.

2.2 **Questions and Requests for Amendment to RFP.** If a Contractor (i) has questions about the RFP, (ii) finds discrepancies, omissions or ambiguities in the RFP, or (iii) believes any term or condition of the RFP is unreasonable, Contractor should request an amendment to the RFP. The request should reference the RFP section at issue and include any specific language that Contractor recommends using.

All requests for amendment must be submitted to the Contact Person in writing (via US mail, courier, e-mail, or hand delivery) and, unless otherwise specified in the RFP, be received by the Contact Person at least **ten (10) calendar days** before the Response Due Date. Questions and requests for amendments directed to the Contact Person or to any other Buyer personnel shall not constitute a formal protest of the RFP. Failure to request an interpretation or change will be considered evidence that Contractor understands and agrees to the provisions of the RFP.

The posting of a written amendment is the only official method by which interpretations, clarifications, changes or additional information will be given by Buyer prior to the opening of Responses. Any other interpretation, clarification, change or information will have no legal effect.

Buyer reserves the right to amend, cancel or reissue the RFP at its discretion. This includes the right to change the Response Due Date and the Contract award date. Notice of all amendments and cancellations will be posted on Buyer's website (please contact the Contact Person if you are uncertain of the website address or if you experience problems accessing it). Contractor is responsible for monitoring this website for new or changing information.

2.3 Format/Content of Responses.

A. If a Response Format is specified in the RFP, Contractors should follow that format.

B. Responses should be prepared simply and economically, providing a straightforward, concise description of Contractor's ability to provide services sought by the RFP. Unnecessary brochures, artwork, expensive paper, and presentation aids are discouraged. Bindings and covers will be at Contractor's discretion.

C. When responding to specific questions, please reprint each question in its entirety before the response.

D. Responses shall be in ink or typewritten. All corrections must be initialed.

E. Response shall be limited to a page size of 8½" x 11". Font size less than 11-points is discouraged. The Response shall be indexed and all pages sequentially numbered.

F. **Except as may be specifically requested in the Response Format, Contractor may not impose any additional terms or conditions to any aspect of the RFP.** Buyer objects to and shall not be required to consider any additional terms or conditions submitted by Contractor, including any appearing in the Response. In submitting a Response, Contractor agrees that any additional terms or conditions shall have no force or effect. Any failure to comply with the terms and conditions of the RFP, including those specifying information that must be submitted with a Response, may result in rejection of the Response. **If Contractor desires a change or clarification to the terms or conditions of the RFP, Contractor must follow the process set forth in Section 2.2 ("Questions and Requests for Amendments").**

G. Unless otherwise requested by Buyer, Contractors should make only one proposal for each RFP item. Multiple offerings, alternates (unless any are specifically requested by Buyer) and/or stipulations may be cause for rejection of a Response C.

H. Price offerings shall be inclusive of ALL costs (including but not limited to administrative cost for submission of all required paperwork on Buyer's behalf and any other costs) and will be the only compensation given to Contractor for the required services herein.

I. All prices submitted under the RFP shall be indelible. The use of correction fluid or erasures to correct line item bid prices and/or quantities are not acceptable. Corrections must be by lineout of the incorrect figures, writing in of correct figures, and initialing of the corrections by the originator. Correction fluid or erasure corrected bids will be considered non-responsive for the corrected item(s) only and may render the entire Response as nonresponsive.

J. Failure to sign any form requiring a signature may be grounds for rejecting a Response.

2.4 Submission of Responses.

A. The location and deadline for submitting Responses is set forth in Section 1 of the RFP. Contractors are fully responsible for meeting these requirements. Reliance upon mail or public carrier is at Contractor's risk. **Late bids will not be considered.**

B. Contractor shall submit:

1) One (1) original signed version of its Response clearly marked as "ORIGINAL." The Response must be signed by an officer or employee having authority to legally bind Contractor.

2) Three (3) hard copies of the entire Response. c

3) One (1) digital scanned copy (in pdf format) of entire Response, on a separate CD- ROM or flash drive. Large files may be scanned as several separate PDF files.

All copies are to be placed in a sealed package. The outside must be marked with (i) the RFP title and number, and (ii) Contractor's name, address, contact person, and telephone number.

It is the sole responsibility of each Contractor to assure all copies are EXACT duplicates of the original Response. Photocopies or CD copies will be used for the purpose of evaluating the Responses. Any information contained in the original Response which has not been transferred to the CDs or photocopies will NOT be considered. The original document will be used solely for official record keeping and auditing purposes.

2.5 Evaluation of Responses.

A. Buyer will determine the qualifications, interest and availability of Contractors by reviewing all Responses and, when deemed necessary in the sole discretion of Buyer, by conducting formal interviews of selected Contractors.

B. Before making an award, Buyer reserves the right to seek clarifications, revisions, and information it deems necessary for the proper evaluation of Responses. Failure to provide any requested clarifications, revisions or information may result in rejection of the Response.

C. Buyer reserves the right to accept or reject any and all Responses, or separable portions thereof, and to waive any minor irregularity, technicality, or omission if Buyer determines that doing so will serve Buyer's best interests. Buyer may reject any Response not submitted in the manner specified by the RFP.

2.6 Award of Contract

A. The process for contract award is set forth in Jacksonville Ordinance Code Sections 126.204. Generally, Buyer will award the Contract to the responsible and responsive proposer whose Response is determined in writing to be the most advantageous to the City of Jacksonville, based solely on the relative importance assigned to price and of the criteria set forth in Attachment B. The award may be contingent on the outcome of direct negotiations under Section 126.201(d)(4) and 126.201(n), *Ordinance Code.* If an agreement cannot be reached with the highest ranked Contractor, Buyer reserves the right to make an award to the next highest ranked Contractor or subsequent Contractor(s) until an agreement is reached.

B. Buyer may make an award within sixty (60) days after the date of the Responses are due, during which period the Responses shall remain firm and shall not be withdrawn. Any Response that expresses a shorter duration may, in Buyer's sole discretion, be accepted or rejected. If award is not made within sixty (60) days, the Response shall remain firm until either the Contract is awarded, or Buyer receives from Contractor written notice that the Response is withdrawn. [Note: Withdrawal of a Response may be requested within 72 hours (excluding State holidays, Saturdays and Sundays) after the date and time Responses are due. Buyer will not accept an amended Response after the date and time Responses are due.]

C. Except as may otherwise be expressly set forth in the RFP, Buyer intends to award one contract, but reserves the right to enter into a contract with multiple Contractors or to reject all Responses.

D. Based on the evaluation results, Buyer shall electronically post a notice of intended award at Buyer's website. Please contact the Contact Person if you are uncertain of Buyer's website address or if you experience problems accessing it. Any person who is adversely affected by the decision shall file with Buyer a notice of protest in accordance with the Protest provisions of the RFP. Buyer does not intend to provide tabulations or notices of award by telephone.

2.7 Terms of Agreement. After award to the successful Contractor, Buyer and Contractor will promptly enter into a written agreement (the "Contract") incorporating the terms of the RFP, the successful Response, and other terms and conditions as may be agreed to between the parties. To the extent the Response contains exceptions to or modifications of the RFP, such exceptions or modifications are stricken unless Buyer affirmatively accepts the exceptions or modifications in the Contract. The Contract will be substantially in the form set forth in an attachment to the RFP. Buyer will not be obligated to pay Contractor for the RFP services until the Contract is signed by both parties. Buyer retains the right to reject all bids and/or amend its notice of award at any time prior to the full execution of the Contract.

If the successful Contractor fails to perform the Services as agreed, Buyer reserves the right to (i) issue a new solicitation for the Services; (ii) reopen the RFP for the purpose of awarding a second contract to another Contractor in accordance with the criteria and processes set forth herein; and/or (iii) take such other actions permitted by law.

2.8 **Public Meetings and Special Accommodations**. Any meetings of the RFP evaluation committee (i.e., the Competitive Sealed Proposal Evaluation Committee), shall be noticed on Buyer's website and shall comply with Florida's Open Meetings Laws. Please contact the Contact Person if you are uncertain of Buyer's website address or if you experience problems accessing it. Persons requiring a special accommodation because of a disability should contact the Contact Person identified in Section 1 at least forty-eight (48) hours prior to the meeting.

2.9 **Ex-Parte Communications**. Communications regarding the RFP by a potential vendor, service provider, bidder, lobbyist or consultant to city employees, staff, or hired consultants are prohibited. This prohibition includes communications with the Buyer's Office of General Counsel unless the Contact Person has authorized those communications in advance. Violations may result in the rejection/disqualification of a Response.

These prohibitions on ex-parted communications do not apply to the following:

- communications regarding the RFP to the Chief of the Procurement Division or the Contact Person, provided the communication is limited strictly to matters of process or procedure already contained in the RFP.
- communications with the city employee responsible for administering the Jacksonville Small Emerging Business Program, provided the communication is limited strictly to matters of programmatic process or procedures.
- communications at any pre-proposal conferences.
- communications with the Office of Inspector General and his/her staff regarding any perceived inefficiency, misconduct or abuse by City employees.
- presentations before publicly noticed committee meetings.
- contract negotiations during any duly noticed public meeting.
- any duly noticed site visits to determine competency of contractors during the period between RFP opening and issuance of the Chief of Procurement Division's written recommendation.
- communications that are necessary for, and solely related to, the ordinary course of business concerning Buyer's existing contract(s) for the materials or services addressed in the RFP.

The period for these prohibitions commences upon the advertisement of the RFP and terminates after the Chief of the Procurement Division issues a written recommendation to the corresponding awarding committee. If the awarding committee refers the Chief's recommendation back for further review, the prohibitions shall be reinstated until such time as the Chief issues a subsequent recommendation.

2.10 **Cost of Developing RFP Response.** All costs related to the preparation of Responses and any related activities are the sole responsibility of Contractor. Buyer assumes no liability for any costs incurred by Contractors throughout the entire selection process.

2.11 **Response Ownership.** All Responses, including attachments, supplementary materials, addenda, etc., shall become property of Buyer and shall not be returned to Contractor. Buyer will have the right to use any and all ideas or adaptation of ideas presented in any Response. Acceptance or rejection of a Response shall not affect this right.

2.12 **Public Records Law; Process For Protecting Trade Secrets and Other Information.** Article 1, Section 24, Florida Constitution, guarantees every person access to all public records, and Section 119.011, Florida Statutes, provides a broad definition of public records. As such, all responses to the RFP are public records unless exempt by law. If Contractor considers any portion of its Response to be exempt from disclosure under Florida law, Contractor must provide Buyer with a separate redacted copy of the Response and briefly describe in writing the grounds for claiming exemption from the public records law, including the specific statutory citation. Contractor shall be responsible for defending its determination that the redacted portions of its Response are confidential, trade secret or otherwise not subject to disclosure. Further, Contractor shall protect, defend, and indemnify Buyer for any and all claims arising from or relating to Contractor's determination that the redacted portions of its Response are confidential, trade secret or otherwise not subject to disclosure. If Contractor fails to submit a Redacted Copy with its Response in accordance with Section 2.4 above, Buyer is authorized to produce the entire Response in answer to a public records request.

In accordance with Section 119.0701, Florida Statutes, the Contractor shall:

(a) Keep and maintain public records required by City to perform the services; and

(b) Upon request from City's custodian of public records, provide City with a copy of the requested records or allow records to be inspected or copied within a reasonable time at a cost that does not exceed the cost provided for in Chapter 119, Florida Statutes, or as otherwise provided by law; and

(c) Ensure that public records that are exempt or confidential and exempt from public records disclosure requirements are not disclosed except as authorized by law for the duration of the Contract term and following completion of this Contract if Contractor does not transfer the records to City; and

(d) Upon completion of this Contract, transfer to City at no cost all public records in possession of Contractor or keep and maintain public records required by City to perform the service. If Contractor transfers all public records to City upon completion of this Contract, Contractor shall destroy any duplicate public records that are exempt or confidential and exempt from public records disclosure requirements. If Contractor keeps and maintains public records upon completion of this Contract, Contractor shall meet all applicable requirements for retaining public records. All records stored electronically must be provided to City upon request from City's custodian of public records in a format that is compatible with City's information technology systems.

The above requirements apply to a "Contractor" as defined in Section, 119.0701, Florida Statutes.
IF CONTRACTOR HAS QUESTIONS REGARDING THE APPLICATION OF CHAPTER 119, FLORIDA STATUTES, TO THE CONTRACTOR'S DUTY TO PROVIDE PUBLIC RECORDS RELATING TO THIS CONTRACT, CONTACT THE CITY'S CUSTODIAN OF PUBLIC RECORDS AT (904) 630-7678; PRR@COJ.NET; CITY OF JACKSONVILLE, PUBLIC RECORDS REQUEST, 214 N. HOGAN STREET, SUITE 1180, JACKSONVILLE, FLORIDA 32202.

2.13 **Multiple Responses from Same Contractor; No Collusion.** More than one Response from an individual, firm, partnership, corporation or association under the same or different names is not permitted. Reasonable grounds for believing that a Contractor is involved in more than one Response for the same work will be cause for rejection of all Responses in which such Contractor is believed to be involved. Any or all Responses will be rejected if there is reason to believe that collusion exists between Contractors. Responses in which the prices obviously are unbalanced will be grounds for rejection.

2.14 **Conflict of Interest.** Section 126.110 of the Jacksonville Ordinance Code requires that a public official who has a financial interest in a bid or contract make a disclosure at the time that the bid or contract is submitted or at the time that the public official acquires a financial interest in the bid or contract, including but not limited to the public official's name, public office or position held, bid or proposal number, and the position or relationship of the public official with the bidder or Contractor. The parties will follow the provisions of Section 126.110, Jacksonville *Ordinance Code,* with respect to required disclosures by public officials who have or acquire a financial interest in a bid or contract with Buyer, to the extent the parties are aware of the same. All Contractors must submit the Conflict of Interest Certificate attached to the RFP.

2.15 **Convicted Vendor List.** A person or affiliate placed on the State of Florida convicted vendor list pursuant to Section 287.133, Florida Statutes, following a conviction for a public entity crime may not do any of the following for a period of 36 months from the date of being placed on the convicted vendor list:

- submit a bid on a contract to provide any goods or services to a public entity;
- submit a bid on a contract with a public entity for the construction or repair of a public building or public work;
- submit bids on leases of real property to a public entity;
- be awarded or perform work as a contractor, supplier, subcontractor, or consultant under a contract with any public entity; and
- transact business with any public entity in excess of the Category Two threshold amount provided in Section 287.017, Florida Statutes.

2.16 **Discriminatory Vendor List.** An entity or affiliate placed on the State of Florida discriminatory vendor list pursuant to Section 287.134, Florida Statutes, may not:

- submit a bid on a contract to provide any goods or services to a public entity;

- submit a bid on a contract with a public entity for the construction or repair of a public building or public work;
- submit bids on leases of real property to a public entity;
- be awarded or perform work as a contractor, supplier, sub-contractor, or consultant under a contract with any public entity; or
- transact business with any public entity.

2.17 **Contractor Representations.** In submitting a Response, Contractor understands, represents, and acknowledges the following (if Contractor cannot so certify to any of following, Contractor shall submit with its Response a written explanation of why it cannot do so).

- Contractor currently has no delinquent obligations to the City of Jacksonville or any of its independent agencies.
- The Response is submitted in good faith and without any prior or future consultation or agreement with any other respondent or potential respondent;
- To the best of the knowledge of the person signing the Response, neither the Contractor, its affiliates, subsidiaries, owners, partners, principals or officers:
  - is currently under investigation by any governmental authority for conspiracy or collusion with respect to bidding on any public contract;
  - is currently under suspension or debarment by any governmental authority in the United States;
  - has within the preceding three years been convicted of or had a civil judgment rendered against it, or is presently indicted for or otherwise criminally or civilly charged, in connection with (i) obtaining, attempting to obtain, or performing a federal, state, or local government transaction or public contract; (ii) violation of federal or state antitrust statutes; or (iii) commission of embezzlement, theft, forgery, bribery, falsification or destruction of records, making false statements, or receiving stolen property; or
  - has within the preceding three-year period had one or more federal, state, or local government contracts terminated for cause or default.
- If this Agreement is for goods or services of $1 million or more, the City, pursuant to Section 287.135(3)(c), Florida Statutes, may terminate this Agreement at City's option if Contractor:

  (a). Is found to have submitted a false certification under Section 287.135(5), Florida Statutes;
  (b). Has been placed on the Scrutinized Companies that Boycott Israel List created pursuant to Section 215.4725, Florida Statutes, or is engaged in a boycott of Israel;
  (c). Has been placed on the Scrutinized Companies with Activities in Sudan List or the Scrutinized Companies with Activities in the Iran Petroleum Energy Sector List created pursuant to Section 215.473, Florida Statutes; or
  (d). Has been engaged in business operations in Cuba or Syria.

- Contractor has read and understands the RFP terms and conditions, and the Response is submitted in conformance with those terms and conditions.
- All representations made by Contractor to Buyer in connection with the RFP have been made after a diligent inquiry of its employees and agents responsible for preparing, approving, or submitting the Response.
- Contractor shall indemnify, defend, and hold harmless Buyer and its employees against any cost, damage, or expense which may be incurred or be caused by any error in the Response.
- All information provided by, and representations made by, Contractor are material and important and may be relied upon by Buyer in awarding the Contract.

2.18 **Protests.** Any protest concerning the RFP shall be made in accordance with the Procurement Protest Procedures established pursuant to Section 126.106(e) of the Jacksonville Ordinance Code. A full copy of the procedures is available on Buyer's website and can also be obtained by contacting Buyer's Contact Person. Please contact the Contact Person if you are uncertain of Buyer's website address or if you experience problems accessing it. Questions and requests made to the Contact Person shall not constitute formal Notice of Protest.

The Procurement Protest Procedures include the following provisions:

- a Protestant shall have 10 business days after the posting of a solicitation or 48 hours after the posted date and time of a pre-bid or pre-proposal conference, whichever is earlier, or 48 hours after the posting of an amendment, in which to file a written Notice of Protest in order to timely challenge the requirements, terms and/or conditions contained in bid or proposal documents, including without limitation any provisions governing or establishing: (i) the basis for making the award in question; (ii) evaluation criteria; (iii) equipment, product, or material specifications; (iv) proposed project schedules; (v) statements regarding participation goals or other equal opportunity measures; or (vi) other general solicitation or project requirements.
- a Protestant shall have 48 hours after either the posting or written notification of a decision or intended decision, whichever is earlier, in which to file a written Notice of Protest in order to timely challenge or seek relief from a recommended conclusion to any bid or proposal solicitation process, including without limitation: (i) a recommendation to reject a bid or proposal; (ii) a contract award; or (iii) the short-listing of bidders or proposers.
- A written Notice of Protest shall: (i) be addressed to the Chief [of Jacksonville's Procurement Division]; (ii) identify the solicitation, decision, or recommended award in question by number and title or any other language sufficient to enable the Chief to identify the same; (iii) state the timeliness of the protest; (iv) state Protestant's legal standing to protest; and (v) clearly state with particularity the issue(s), material fact(s) and legal authority upon which the protest is based.
- At the time of filing a timely Notice of Protest, a Protestant may request an extension of three (3) business days after the date its Notice of Protest is timely received, in which to provide supplemental protest documentation. Failure to do so or to timely submit the supplemental protest documentation shall constitute a waiver of any right to same.
- The timely filing of a Notice of Protest shall be accomplished when said notice is actually received by the Procurement Division within the applicable time limitation or period contained herein. Filing a notice may be accomplished by manual transfer via hand-delivery or mail to the Chief of Procurement Division at 214 North Hogan Street, Suite 899, Jacksonville, Florida 32202, or by electronic transfer via facsimile to (904) 255-8837. The responsibility and burden of proof that its Notice of Protest has been timely and properly received shall rest with the Protestant, regardless as to the method of delivery employed.

Section 3
General Terms and Conditions of Agreement

Contents

3.1 Provision of Services
3.2 Relationship of the Parties
3.3 Buyer's Right to Make Changes
3.4 Service Warranties
3.5 Buyer Will Assist Contractor
3.6 Location Requirements for Services
3.7 Use of Subcontractors; Flow-Down Provisions
3.8 Meetings and Reports
3.9 Ownership of Works
3.10 Intellectual Property
3.11 Software Development Processes and Standards
3.12 Limitation of Warranty for Buyer-Furnished Software
3.13 Loss of Data
3.14 Purchase Orders
3.15 Best Pricing for Comparable Services to Other Government Entities
3.16 Invoicing and Payment
3.17 Taxes
3.18 Right of Setoff
3.19 Retention of Records / Audits
3.20 Indemnification
3.21 Insurance
3.22 Buyer's Right to Suspend Work
3.23 Buyer's Right to Terminate for Convenience
3.24 Buyer's Remedies Upon Contractor Default.
3.25 Contractor Remedies Upon Buyer Default.
3.26 Transition Services
3.27 Force Majeure, Notice of Delay, and No Damages for Delay
3.28 No Waiver
3.29 Qualification of Contractor Employees, Subcontractors, and Agents
3.30 Security Procedures
3.31 Restrictions on the Use or Disclosure of Buyer's Information
3.32 Protection of Contractor's Trade Secrets and Other Confidential Information
3.33 Assignment
3.34 Notice and Approval of Changes in Ownership
3.35 Assignment of Antitrust Claims
3.36 Equal Employment Opportunity
3.37 Other Non-Discrimination Provisions
3.38 Prompt Payment to Subcontractors and Suppliers
3.39 Conflicts of Interest
3.40 Contingent Fees Prohibited
3.41 Truth in Negotiation Certificate
3.42 Compliance with Applicable Laws
3.43 Cooperative Purchasing
3.44 Warranty of Ability to Perform
3.45 Warranty of Authority to Sign Contract
3.46 Governing State Law/Severability/Venue/Waiver of Jury Trial
3.47 Construction

3.1. **Provision of Services.** Contractor shall provide Buyer with all of the services and deliverables described in the RFP, the Response and the resulting Contract (collectively, the "Services"). If any services, functions or responsibilities are not specifically described in the RFP, the Response or the resulting Contract but are necessary for the proper performance and provision of the Services, they shall be deemed to be implied by and included within the scope of the Services to the same extent and in the same manner as if specifically described herein.

3.2. **Relationship of the Parties.** In performance of the Services, Contractor shall be acting in the capacity of an independent contractor and not as an agent, employee, partner, joint venture or associate of Buyer. Contractor shall be solely responsible for the labor, supplies, materials, means, methods, techniques, sequences and procedures utilized to perform the Services in accordance with the Contract.

3.3. **Buyer's Right to Make Changes.** Buyer may unilaterally require, by written order, changes altering, adding to, or deducting from the Services ("Changes"), provided that such Changes are within the general scope of the Contract. Buyer will make an equitable adjustment in the Contract price or delivery date if the Change materially affects the cost or time of performance. Such equitable adjustments require the written consent of Contractor, which shall not be unreasonably withheld. The Parties will cooperate with each other in good faith in discussing the scope and nature of the Change, the availability of Contractor personnel, the expertise and resources to provide such Change, and the time period in which such Change will be implemented.

3.4. **Service Warranties.** Contractor warrants that the Services shall be performed and delivered in a professional, first-class manner in accordance with the Contract and the standards prevailing in the industry. Contractor shall also undertake the following actions without additional consideration during the term of the Contract and for one year thereafter: (i) promptly making necessary revisions or corrections to resolve any errors and omissions on the part of Contractor; and (ii) conferring with Buyer for the purpose of interpreting any of the Services or information furnished. Acceptance of the Services by Buyer shall not relieve Contractor of these responsibilities. The warranties and covenants in this paragraph will extend to all subcontractors as well.

The foregoing warranties and covenants shall not apply (i) with respect to any portions of the Service that have been produced by anyone other than Contractor or its subcontractors; (ii) to any modifications made by anyone other than Contractor or its subcontractors or without Contractor's specific prior written consent; or (iii) to any use of the Service in a manner or for any purpose other than those contemplated in the Contract. **EXCEPT AS EXPRESSLY STATED IN THE CONTRACT, THERE ARE NO WARRANTIES, EXPRESS OR IMPLIED, INCLUDING WITHOUT LIMITATION ANY IMPLIED WARRANTIES REGARDING MERCHANTABILITY OR FITNESS FOR A PARTICULAR PURPOSE. CONTRACTOR'S WARRANTIES EXTEND SOLELY TO BUYER.**

3.5. **Buyer Will Assist Contractor.** At Contractor's request, Buyer will provide reasonable assistance and cooperation to Contractor, including the supply of any data and information necessary for Contractor to provide the Services. Buyer will also designate a Contract Manager who will, on behalf of Buyer, work with Contractor and administer the Contract in accordance with its terms.

3.6. **Location Requirements for Services.** Unless otherwise stated in the RFP or the Response, the majority of the Services shall be performed within Duval County, Florida and no Services will be performed outside of the United States. These restrictions may be modified in writing if Buyer determines, in its sole discretion, that the restrictions impose an undue burden on Contractor's ability to perform the Services as contemplated in the Contract.

3.7. **Use of Subcontractors; Flow-Down Provisions.** Except to the extent the use of subcontractors is disclosed in the Response or consented to in writing by Buyer, Contractor shall not be allowed to subcontract or assign any of its duties and obligations hereunder. In all cases, Contractor will be responsible for the acts or omissions of its subcontractors. Contractor will ensure that all relevant contractual obligations will flow down to the subcontractors and will be incorporated into the subcontracts (including the obligations relating to insurance, indemnification, delays, intellectual property rights, public records, non-discrimination, audits, security, location of services, termination, transition assistance, warranties, and the manner in which the Services are to be performed).

3.8. **Meetings and Reports.** Contractor must attend all meetings and public hearings relative to the Services where its presence is determined to be necessary and requested by Buyer and Contractor can reasonably schedule its

appearance. Unless otherwise agreed, Contractor shall provide a monthly report summarizing Contractor's performance. Contractor shall provide other periodic reports respecting the Services as Buyer reasonably requests.

3.9. Ownership of Works.

(a) As used in Sections 3.9 and 3.10, the term "Work" shall mean each deliverable, drawing, design, specification, rendering, notebook, tracing, photograph, reference book, equipment, expendable equipment and material, negative, report, finding, recommendation, data and memorandum of every description, shared with or delivered to Buyer pursuant to the Contract.

(b) With the exception of Contractor's pre-existing intellectual capital and third-party intellectual capital as described in Section 3.10 below, Buyer shall own all right, title and interest, including ownership of copyright (limited to the extent permitted by the terms of any governing licenses), in and to each Work including, but not limited to, software, source code, reports, deliverable, or work product developed by Contractor specifically for Buyer in connection with the Contract, and derivative works relating to the foregoing. The use of these Works in any manner by Buyer shall not support any claim by Contractor for additional compensation.

(c) Each Work, and any portion thereof, shall be a "work made for hire" for Buyer pursuant to federal copyright laws. Any software, report, deliverable, or work product as used in connection with the Work, but previously developed by Contractor specifically for other customers of Contractor or for the purpose of providing substantially similar services to other Contractor customers, generally shall not be considered "work made for hire", so long as the foregoing are not first conceived or reduced to practice as part of the Work. To the extent any of the Works are not deemed works made for hire by operation of law, Contractor hereby irrevocably assigns, transfers, and conveys to Buyer, or its designee, without further consideration all of its right, title and interest in such Work, including all rights of patent, copyright, trade secret, trademark or other proprietary rights in such materials. Except as provided in the foregoing sentences, Contractor acknowledges that Buyer shall have the right to obtain and hold in its own name any intellectual property right in and to the Work. Contractor agrees to execute any documents or take any other actions as may reasonably be necessary, or as Buyer may reasonably request, to perfect or evidence Buyer's ownership of the Work.

3.10. Intellectual Property.

(a) Contractor grants to Buyer an irrevocable, perpetual, royalty free and fully paid-up right to use (and such right includes, without limitation, a right to copy, modify and create derivative works from the subject matter of the grant and the right to sublicense all, or any portion of, the foregoing rights to an affiliate or a third party who provides service to Buyer) Contractor's intellectual property (including, without limitation, all trade secrets, patents, copyright and know-how) that is contained or embedded in, required for the use of, that was used in the production of or is required for the reproduction, modification, maintenance, servicing, improvement or continued operation of any applicable unit of Work.

(b) If the Work contains, has embedded in, or requires for the use of, any third party intellectual property, or if the third party intellectual property is required for the reproduction, modification, maintenance, servicing, improvement or continued operation of the Work, Contractor shall secure for Buyer an irrevocable, perpetual, royalty free and fully paid-up right to use all third party intellectual property. Contractor shall secure such right at its expense and prior to incorporating any third party intellectual property (including, without limitation, all trade secrets, patents, copyright and know-how) into any Work, including, without limitation, all drawings or data provided under the Contract, and such right must include, without limitation, a right to copy, modify and create derivative works from the subject matter of the grant of the right and a right to sublicense all or any portion of the foregoing rights to an affiliate or a third party service provider. This subparagraph does not apply to standard office software (e.g., Microsoft Office).

(c) Should Buyer, or any third party obtaining such Work through Buyer, use the Work or any part thereof for any purpose other than that which is specified in the Contract, it shall be at Buyer's and such third party's sole risk.

3.11. Software Development Processes and Standards. To the extent any software is developed, modified, or otherwise procured under the Contract, Contractor will use commercially-accepted software development and documentation processes and standards.

3.12. Limitation of Warranty for Buyer-Furnished Software. In lieu of any other warranty expressed or implied herein, Buyer warrants that any programming aids and software packages supplied for Contractor use as Buyer-furnished

property shall be suitable for their intended use on the system(s) for which designed. In the case of programming aids and software packages acquired by Buyer from a commercial source, such warranty is limited to that set forth in the contractual document covering the product(s). Should Buyer furnish Contractor with any programming aids or software packages that are found not to be suitable for their intended use on the system(s) for which designed, Contractor shall notify Buyer and supply documentation regarding any defects and their effect on progress on the Contract. Buyer will consider equitably adjusting the delivery performance dates or compensation, or both, and any other contractual provision affected by the Buyer-furnished property in accordance with the procedures provided for in Section 3.3 above ("Buyer's Right to Make Changes").

3.13. **Loss of Data.** If any Buyer data or record is lost or corrupted due to the negligence of Contractor or any of its subcontractors or agents, Contractor shall be responsible for correcting and recreating all production, test, acceptance and training files or databases affected which are used in the provision of services, at no additional cost to the Customer in the manner and on the schedule set by Buyer. This remedy shall be in addition to any other remedy Buyer may be entitled to by law or the Contract.

3.14. **Purchase Orders.** If the Contract requires a Service to be ordered by Buyer via purchase order, Contractor shall not deliver or furnish the Service until a Buyer transmits a purchase order. All purchase orders shall bear the Contract or solicitation number, shall be placed by Buyer directly with Contractor, and shall be deemed to incorporate by reference the Contract. Any discrepancy between the Contract terms and the terms stated on the Contractor's order form, confirmation, or acknowledgement shall be resolved in favor of terms most favorable to Buyer.

3.15. **Best Pricing for Comparable Services to Other Government Entities**. Compensation for the Services shall be as set forth in the Contract. During the Contract term, if Contractor offers better pricing to other government entities for substantially the same or a smaller quantity of Services upon the same or similar terms of the Contract ("Better Pricing"), then the price under the Contract shall be immediately reduced to the better price. Buyer may require Contractor to certify on an annual basis that Better Pricing (as defined above) does not exist.

3.16. **Invoicing and Payment.**

(a) Unless otherwise specified in the RFP, payment to Contractor for Services shall be made on a monthly basis for the Services provided by Contractor for the preceding month. Invoices shall contain the Contract number, purchase order number if applicable, and the appropriate vendor identification number. Buyer may require any other information from Contractor that Buyer deems necessary to verify its obligation to pay under the Contract. Payments will be made to Contractor approximately forty-five (45) days after receipt and acceptance of a proper invoice. Buyer does not pay service charges, interest or late fees unless required by law.

(b) To the extent Contractor's fees include reimbursement for travel or travel- related expenses, such travel and travel-related expenses shall be subject to and governed by the provisions and limitations of Chapter 106, Part 7, Jacksonville Ordinance Code.

(c) Buyer's obligations to make payment are contingent upon availability of lawfully appropriated funds for the Services.

3.17. **Taxes.** Buyer is generally exempt from any taxes imposed by the State of Florida or the Federal Government. Exemption certificates will be provided upon request. Contractor shall not include any state, local and federal taxes in any prices quoted to Buyer.

3.18. **Right of Setoff.** Buyer may, in addition to other remedies available at law or equity and upon notice to Contractor, retain such monies from amounts due Contractor as may be necessary to satisfy any claim for damages, penalties, costs and the like asserted in good faith by Buyer (or any other local government entity or authority located in Duval County, Florida) against Contractor.

3.19. **Retention of Records / Audits.**

(a) Contractor must establish and maintain books, records, contracts, sub-contracts, papers, financial records, supporting documents, statistical records and all other documents pertaining to the Contract (collectively, the "Records"), in whatsoever form or format (including electronic storage media) is reasonable, safe and sufficient.

(b) Contractor must retain all Records for a minimum period of three (3) years after the final payment is made under the Contract. If an audit has been initiated and audit findings have not been resolved at the end of the three (3) year period, the Records shall be retained until resolution of the audit findings or any litigation which may be based on the terms of the Contract, at no additional cost to Buyer. Records shall be retained for longer periods when the retention period exceeds the time frames required by law or ordinance.

(c) At all reasonable times for as long as the Records are maintained, Contractor must allow persons duly authorized by Buyer (including Buyer's auditor and inspector general offices), and to have full access to and the right to examine, copy or audit any of the Records, regardless of the form in which kept. Contractor will not charge Buyer for any setup, supervision or space in connection with the examination and audit. Photocopying charges will not exceed the actual and reasonable cost of the copies to Contractor, and Buyer shall be permitted to bring its photocopying equipment if Buyer so desires.

(d) Contractor must comply with and cooperate in any audits or reports requested by Buyer, and must ensure that all related party transactions are disclosed to the auditor.

(e) Contractor must permit Buyer to interview any of Contractor's employees, subcontractors and subcontractor employees to assure Buyer of the satisfactory performance of the terms and conditions of the Contract. Unless the parties agree otherwise or Buyer is willing to pay for the employee's reasonable travel expenses, the interviews will be conducted at the employee's primary place of work. Contractor will not charge Buyer for any employee time unless the interview time for that employee exceeds eight (8) hours in a calendar year.

(f) Following any audit or review, if performance of Contractor is, in the opinion of Buyer, deficient, Buyer will deliver to Contractor a written report of the deficiencies and request for development by Contractor of a corrective action plan. Contractor hereby agrees to prepare and submit, to Buyer, said corrective plan within ten (10) days of receiving Buyer's written report. Thereafter, Contractor must correct all deficiencies in the corrective action plan within a reasonable time after Buyer's receipt of the corrective action plan.

(g) All reports and other information provided by Contractor pursuant to this Section shall be submitted under penalties of perjury, under Section 837.06, Florida Statutes.

(h) Contractor must include the aforementioned audit, inspection, investigation and record-keeping requirements in all subcontracts and Contract assignments.

(i) Contractor agrees to reimburse Buyer for the reasonable costs of investigation incurred by Buyer for audits, inspections and investigations that uncover a material violation of the Contract. Such costs shall include the salaries of investigators, including overtime, travel and lodging expenses, and expert witness and documentary fees. Contractor shall not be responsible for any costs of investigations that do not uncover a material violation of the Contract.

3.20. **Indemnification.** See Attachment G attached hereto.

3.21 **Insurance.** See Attachment H attached hereto.

3.22. **Buyer's Right to Suspend Work.** Buyer may in its sole discretion suspend any or all activities under the Contract by providing a written notice to Contractor at least five (5) days in advance that outlines the particulars of suspension. Within ninety (90) days of providing such notice, or within any longer period agreed to by Contractor, Buyer shall either (1) authorize the resumption of work, at which time activity shall resume, or (2) terminate the Contract in accordance with the applicable termination provisions. Suspension of work shall not entitle Contractor to any additional compensation. The parties will reasonably amend any schedules relating to performance of the Services to reflect the suspension of work hereunder. Contractor shall not be entitled to receive compensation for any work it performs after being excused from providing it hereunder.

3.23. **Buyer's Right to Terminate for Convenience.** Buyer reserves the right to terminate the Contract at any time and for any reason by giving written notice to Contractor. If the Contract is terminated for convenience as provided herein, Buyer will be relieved of all further obligations other than payment for that amount of Services actually performed to the date of termination. Access to any and all work papers will be provided to the Buyer after the termination of the Contract.

The parties understand and agree that Contractor shall not have a reciprocal right to terminate the Contract for convenience; it being understood that Buyer's payment for Services forms the consideration for Contractor not having this right. In the event of Buyer's termination of the Contract, Buyer (in its sole discretion) may also require Contractor to provide the Transition Services as set forth in Section 3.26 below.

3.24. Buyer's Remedies Upon Contractor Default. Any one or more of the following events, if not cured within ten (10) calendar days after Contractor's receipt of written notice thereof, shall constitute an "Event of Default" on the part of Contractor: (1) Contractor fails to perform the Services within the time specified in the Contract or any extension, (2) Contractor fails to maintain adequate progress, thus endangering performance of the Contract, (3) Contractor fails to honor any other material term of the Contract, or (4) Contractor fails to abide by any statutory, regulatory, or licensing requirement. Buyer may extend the 10-day cure period in its discretion.

In addition, the following shall constitute an immediate Event of Default with no right cure: (i) Contractor is found to have made a false representation or certification in its Response, or (ii) Contractor has been placed on the list maintained under Section 287.135, Florida Statutes, of companies with activities in Sudan or in Iran Petroleum Energy Sector.

Upon an "Event of Default" on the part of Contractor, Buyer will be entitled to terminate the Contract and pursue such other remedies available at law or equity, including the recovery of any re-procurement costs and delay damages. The rights and remedies available to Buyer under the Contract are distinct, separate and cumulative remedies, and no one of them, whether or not exercised by a party, shall be deemed to be in exclusion of any other.

If, after termination, it is determined that Contractor was not in default, or that the default was excusable, the rights and obligations of the parties shall be the same as if the termination had been issued for the convenience.

3.25. Contractor Remedies Upon Buyer Default. Buyer shall be in default if Buyer fails to honor any material term of the Contract, and such failure is not cured within forty-five (45) calendar days after receipt of written notice thereof from Contractor. In the event of Buyer's default, Contractor will be entitled to terminate the Contract and pursue such other remedies available at law or equity as it deems appropriate. **Except as expressly provided elsewhere in the Contract, Contractor will not be entitled to recover any lost profits or consequential damages.** The rights and remedies available to Contractor under the Contract are distinct, separate and cumulative remedies, and no one of them shall be deemed to be in exclusion of any other.

3.26. Transition Services. At any time prior to the date the Contract expires or terminates for any reason (the "Termination Date"), Buyer may direct Contractor to provide reasonable transition assistance services ("Transition Assistance"). Contractor shall provide such Transition Assistance until such time as Buyer notifies Contractor that Buyer no longer requires such Transition Assistance, but in no event for more than 180 days following the Termination Date.

Transition Assistance shall mean any services, functions or responsibilities that are ordinarily or customarily provided to a purchaser to ensure that the services provided to that purchaser by a contractor are fully transitioned in a smooth and efficient manner to a new service provider (either Buyer itself or a third party contractor). Transition Assistance includes the development and implementation of a detailed transition plan. To the extent that Transition Assistance will involve third parties hired by Buyer, those third parties shall cooperate with Contractor in its provision of Transition Assistance and sign any reasonable non-disclosure agreements required by Contractor.

Transition Assistance rendered before the Termination Date shall be provided at no additional cost to Buyer. Transition Assistance rendered after the Termination Date shall be provided at the rates negotiated by the parties prior to the rendering of such service, which rates shall not exceed the standard market rates that Contractor charges to government entities for comparable services; provided however, that if Buyer terminates the Contract because of a breach by Contractor, then (i) the Transition Assistance shall be provided at no cost to Buyer, and (ii) Buyer will be entitled to any other remedies available to it under law. Contractor may withhold Transition Assistance after the Termination Date if Buyer does not provide reasonable assurance that the charges for such Transition Assistance will be paid to Contractor in accordance with the invoicing and payment provisions of the Contract.

3.27. Force Majeure, Notice of Delay, and No Damages for Delay. Neither party shall be responsible for delays in performance if the delay was beyond that party's control (or the control of its employees, subcontractors or agents). Contractor shall notify Buyer in writing of any such delay or potential delay and describe the cause of the delay either (1)

within ten (10) calendar days after the cause that creates or will create the delay first arose, if Contractor could reasonably foresee that a delay could occur as a result, or (2) if delay is not reasonably foreseeable, within five (5) calendar days after the date Contractor first had reason to believe that a delay could result. Based upon such notice, Buyer will give Contractor a reasonable extension of time to perform; provided, however, that Buyer may elect to terminate the Contract in whole or in part if Buyer determines, in its sole judgment, that such a delay will significantly impair the value of the Contract to Buyer. Providing notice in strict accordance with this paragraph is a condition precedent to such remedy. **THE FOREGOING SHALL CONSTITUTE CONTRACTOR'S SOLE REMEDY OR EXCUSE WITH RESPECT TO DELAY.** No claim for damages, other than for an extension of time, shall be asserted against Buyer. Contractor shall not be entitled to an increase in the Contract price or payment of any kind from Buyer for direct, indirect, consequential, impact or other costs, expenses or damages, including but not limited to costs of acceleration or inefficiency arising because of delay, disruption, interference, or hindrance from any cause whatsoever.

3.28. **No Waiver.** The delay or failure by a party to exercise or enforce any of its rights under the Contract shall not constitute or be deemed a waiver of that party's right thereafter to enforce those rights, nor shall any single or partial exercise of any such right preclude any other or further exercise thereof or the exercise of any other right. Unless otherwise agreed in writing, Buyer's payment for the Services shall not release Contractor of its obligations under the Contract and shall not be deemed a waiver of Buyer's right to insist upon strict performance hereof.

3.29. **Qualification of Contractor Employees, Subcontractors, and Agents.** All Contractor employees, subcontractors and agents performing work under the Contract shall be properly trained and qualified. Upon request, Contractor shall furnish a copy of technical certification or other proof of qualification. All employees, subcontractors and agents performing work under the Contract must comply with all reasonable administrative requirements of Buyer and with all controlling laws and regulations relevant to the services they are providing under the Contract. Buyer may conduct, and Contractor shall cooperate in, a security background check or other assessment of any employee, subcontractor or agent furnished by Contractor. Buyer may refuse access to, or require replacement of, any personnel for reasonable cause.

Contractor shall take all actions necessary to ensure that Contractor's employees, subcontractors and agents are not considered employees of Buyer. Such actions include, but are not limited to, ensuring that Contractor's employees, subcontractors and agents receive payment and any legally mandated insurance (e.g., workers' compensation and unemployment compensation) from an employer other than Buyer.

As a condition to providing services to Buyer, Contractor (and any subcontractor) will enroll and participate in the federal E-Verify Program within thirty days of the effective date of the Contract. Proof of enrollment and participation will be made available to Buyer upon request.

3.30. **Security Procedures.** Contractor and its employees, subcontractors and agents shall comply fully with all generally applicable security procedures of the United States, the State of Florida and Buyer in performance of the Contract. Buyer agrees that any security procedures imposed by Buyer specifically for the Contract will be reasonable and will not impose any unreasonable costs or hardships.

3.31. **Restrictions on the Use or Disclosure of Buyer's Information.** Contractor shall not use, copy or disclose to third parties, except in connection with performing the Services, any information obtained by Contractor or its agents, subcontractors or employees in the course of performing the Services, including, but not limited to, security procedures, business operations information, or commercial proprietary information in the possession of Buyer. At Buyer's request, all information furnished by Buyer will be returned to Buyer upon completion of the Services. Contractor shall not be required to keep confidential any information that has already been made publicly available through no fault of Contractor or that Contractor developed independently without relying on Buyer's information. To ensure confidentiality, Contractor shall take appropriate steps as to its employees, agents, and subcontractors, including the insertion of these restrictions in any subcontract agreement. The warranties of this paragraph shall survive the Contract.

3.32. **Protection of Contractor's Trade Secrets and Other Confidential Information.** All documents received by Buyer in connection with this Agreement are subject to Chapter 119, Florida Statutes (the "Florida Public Records Law"). Any specific information that Contractor claims to be a trade secret or otherwise exempt from the Florida Public Records Law must be clearly identified as such by Contractor on all copies furnished to Buyer. Buyer agrees to notify Contractor of any third-party request to view such information, but it is Contractor's obligation to obtain a court order enjoining disclosure. If Contractor fails to obtain a court order enjoining disclosure within five (5) business days of Contractor's receiving notice of the request, Buyer may release the requested information. Such release shall be deemed for purposes of the Contract to

be made with Contractor's consent and will not be deemed to be a violation of law, including but not limited to laws concerning trade secrets, copy right or other intellectual property.

3.33. Assignment. Each party binds itself and its respective successors and assigns in all respects to all of the terms, conditions, covenants and provisions of the Contract. Contractor shall not sell, assign or transfer any of its rights (including rights to payment), duties or obligations under the Contract without the prior written consent of Buyer. In the event of any assignment, Contractor shall remain liable for performance of the Contract unless Buyer expressly waives such liability. Buyer may assign the Contract with prior written notice to Contractor of its intent to do so. Nothing herein shall be construed as creating any personal liability on the part of any officer, employee or agent of Buyer.

3.34. Notice and Approval of Changes in Ownership. Because the award of the Contract may have been predicated upon Contractor's ownership structure, Contractor agrees that any transfer of a substantial interest in Contractor by any of its owners shall require Buyer's prior written approval, which approval shall not be unreasonably withheld or unreasonably delayed. By execution of the Contract, Contractor represents that it has no knowledge of any intent to transfer a substantial interest in Contractor. A substantial interest shall mean at least 25% of the voting shares in Contractor. This section shall not apply to (i) transfers occurring upon the incapacitation or death of an owner; (ii) transfers associated with an initial public offering on the NYSE or NASDAQ markets; or (iii) transfers to a company whose stock is publicly traded on the NYSE or NASDAQ markets.

3.35. Assignment of Antitrust Claims. Contractor and Buyer recognize that in actual economic practice, overcharges resulting from antitrust violations are in fact usually borne by Buyer. Therefore, Contractor hereby assigns to Buyer any and all claims under the antitrust laws of Florida or the United States for overcharges of goods, materials or services purchased in connection with the Contract.

3.36. Equal Employment Opportunity. The Equal Opportunity clause in Title 41, Part 60-1.4 of the Code of Federal Regulations (Paragraphs 1 through 7 of President's Executive Order 11246), the provisions of the Equal Opportunity for Individuals with Disabilities Act in 42 U.S.C. Section 12112, the Listing of Employment Openings for Veterans Clause in Title 41, Part 50-260.2 of the Code of Federal Regulations and the Disabled Veterans and Veterans of the Vietnam era Clause in Title 41, Part 60-250.5 of the Code of Federal Regulations, are incorporated herein by reference if and to the extent applicable. If Contractor is exempt from any of the above cited terms, written evidence of such exempt status must be provided to Buyer.

3.37. Other Non-Discrimination Provisions. As required by Section 126.404, Jacksonville Ordinance Code, contractor represents that it has adopted and will maintain throughout the term of this contract a policy of nondiscrimination or harassment against any person with regard to race, color, sex (including pregnancy), sexual orientation, gender identity or expression, religion, political affiliation, national origin, disability, age, marital status, veteran status, or any other impermissible factor in recruitment, hiring, compensation, training, placement, promotion, discipline, demotion, transfers, layoff, recall, termination, working conditions and related terms and conditions of employment. Contractor agrees that, on written request, it will permit reasonable access to its records of employment, employment advertisement, application forms and other pertinent data and records, by the Executive Director of the Community Relations Commission, or successor agency or commission, for the purpose of investigation to ascertain compliance with the non-discrimination provisions of the Contract; *provided however*, that Contractor shall not be required to produce, for inspection, records covering periods of time more than one (1) year prior to the effective date of the Contract. Contractor agrees that, if any of the products or Services to be provided pursuant to the Contract are to be provided by a subcontractor, the provisions of this Section shall be incorporated into and become a part of the subcontract.

3.38. Prompt Payment to Subcontractors and Suppliers. The following is required by Chapter 126, Part 6, Jacksonville Ordinance Code; provided however, if Contractor does not use JSEB subcontractors, as identified below, this Section 3.38 shall not apply:

(a) *Generally.* When Contractor receives payment from Buyer for labor, services or materials furnished by subcontractors and suppliers hired by Contractor, Contractor shall remit payment due (less proper retainage) to those subcontractors and suppliers within fifteen (15) calendar days after Contractor's receipt of payment from Buyer. Nothing herein shall prohibit Contractor from disputing, pursuant to the terms hereof, all or any portion of a payment alleged to be due to its subcontractors and suppliers. In the event of such dispute, Contractor may dispute the disputed portion of any such payment only after Contractor has provided notice to the Buyer and to the subcontractor or supplier whose payment is in dispute, which notice shall: (i) be in writing; (ii) state the amount in dispute; (iii) specifically describe the

actions required to cure the dispute; and (iv) be delivered to Buyer and said subcontractor or supplier within ten (10) calendar days after Contractor's receipt of payment from Buyer. Contractor shall pay all undisputed amounts due within the time limits imposed by this Section.

(b) *Jacksonville Small and Emerging Business Enterprise and Minority Business Enterprise Participation.* Notwithstanding Chapter 126, Part 6 of the Jacksonville Ordinance Code, Contractor shall pay all contracts awarded with certified Jacksonville Small and Emerging Business Enterprises ("JSEB"), as defined therein, their pro rata share of their earned portion of the progress payments made by Buyer under the Contract within seven (7) business days after Contractor's receipt of payment from Buyer (less proper retainage). The pro-rata share shall be based on all work completed, materials and equipment furnished, or services performed by the certified JSEB at the time of payment. As a condition precedent to progress and final payments to Contractor, Contractor shall provide to Buyer, with its requisition for payment, documentation that sufficiently demonstrates that Contractor has made proper payments to its certified JSEB's from all prior payments Contractor has received from Buyer. Contractor shall not unreasonably withhold payments to certified JSEB's if such payments have been made to Contractor. If Contractor withholds payment to its certified JSEB's, which payment has been made by Buyer to Contractor, Contractor shall return said payment to Buyer. Contractor shall provide notice to Buyer and to the certified JSEB's whose payment is in dispute, which notice shall: (i) be in writing; (ii) state the amount in dispute; (iii) specifically describe the actions required to cure the dispute; and (iv) be delivered to Buyer and said JSEB's within five (5) calendar days after Contractor's receipt of payment from Buyer. Contractor shall pay all undisputed amounts due within the time limits imposed in this Section. The failure to pay undisputed amounts to the JSEB's within seven (7) business days shall be a breach of the Contract, compensable by one per-cent (1%) of the outstanding invoice being withheld by Buyer, not as a penalty, but as liquidated damages to compensate for the additional contract administration by Buyer.

(c) *Third Party Liability.* The Prompt Payment requirements hereunder shall in no way create any contractual relationship or obligation between Buyer and any subcontractor, supplier, JSEB or any third party or create any Buyer liability for Contractor's failure to make timely payments hereunder. However, Contractor's failure to comply with the Prompt Payment requirements shall constitute a material breach of Contractor's contractual obligations to Buyer. As a result of said breach, Buyer, without waiving any other available remedy it may have against Contractor, may: (i) issue joint checks; and (ii) charge Contractor a 0.2% daily late payment charge or the charges specified in said Chapter 126 of the Jacksonville Ordinance Code for JSEB's and in Chapter 218, Florida Statutes, for non-JSEB's, whichever is greater.

3.39. **Conflicts of Interest**. Contractor acknowledges that Section 126.110 of the Jacksonville Ordinance Code requires that a public official who has a financial interest in a bid or contract make a disclosure at the time that the bid or contract is submitted or at the time that the public official acquires a financial interest in the bid or contract, including but not limited to the public official's name, public office or position held, bid or proposal number, and the position or relationship of the public official with the bidder or contractor.

3.40. **Contingent Fees Prohibited.** Contractor warrants that it has not employed or retained any company or person, other than a bona fide employee working solely for Contractor, to solicit or secure the Contract and that it has not paid or agreed to pay any person, company, corporation, individual or firm, other than a bona- fide employee working solely for Contractor, any fee, commission, percentage, gift or any other consideration, contingent upon or resulting from the award or making of the Contract. For the breach or violation of these provisions, Buyer shall have the right to terminate the Contract without liability and, at its discretion, to deduct from the contract price, or otherwise recover, the full amount of such fee, commission, percentage, gift or consideration.

3.41. **Truth in Negotiation Certificate**. The execution of the Contract by Contractor shall be deemed to be a simultaneous execution of a Truth-In-Negotiation Certificate, whereby Contractor states that the wage rates and other factual unit costs supporting the compensation hereunder are accurate, complete and current at the time of contracting. Further Contractor agrees that the compensation hereunder shall be adjusted to exclude any significant sums where Buyer determines the contract price was increased due to inaccurate, incomplete or non-current wage rates and other factual unit costs, provided that any and all such adjustments shall be made within one (1) year following the completion date of the Contract.

3.42. **Compliance with Applicable Laws.** Contractor (and any subcontractors) must comply with all applicable federal, state and local laws, rules and regulations as the same exist and as may be amended from time to time, including, but not limited to:

- Chapter 119, Florida Statutes (the Florida Public Records Law);
- Section 286.011, Florida Statutes (the Florida Sunshine Law);
- Chapter 602, Jacksonville Ordinance Code (the Jacksonville Ethics Code);
- Chapter 126, Jacksonville Ordinance Code (the Jacksonville Purchasing Code); and
- All licensing and certification requirements applicable to performing the Services.

3.43. **Cooperative Purchasing.** Pursuant to their own governing laws, and subject to the agreement of Contractor, other entities may be permitted to make purchases at the terms and conditions contained herein. These purchases are independent of the agreement between Buyer and Contractor, and Buyer shall not be a party to such transactions.

3.44. **Warranty of Ability to Perform.** Contractor warrants that (i) it is ready, willing and able to perform its obligations under the Contract, and (ii) to the best of Contractor's knowledge, there are no pending or threatened actions, proceedings, investigations or any other legal or financial conditions that would in any way prohibit, restrain, or diminish Contractor's ability to satisfy its Contract obligations. Contractor shall immediately notify Buyer in writing if its ability to perform is compromised in any manner during the term of the Contract.

3.45. **Warranty of Authority to Sign Contract.** Each person signing the Contract warrants that he or she is duly authorized to do so and to bind the respective party to the Contract.

3.46. **Governing State Law/Severability/Venue/Waiver of Jury Trial.** The rights, obligations and remedies of the parties as specified under the Contract shall be interpreted and governed in all aspects by the laws of the State of Florida. Should any provision of the Contract be determined by the courts to be illegal, unenforceable or in conflict with any applicable law, the validity of the remaining provisions shall not be impaired. Venue for litigation of the Contract shall be exclusively in courts of competent jurisdiction located in Jacksonville, Duval County, Florida. The parties waive any and all rights to a jury trial with respect to disputes arising under the Contract.

3.47. **Construction.** Both parties acknowledge that they have had the opportunity to provide meaningful input into the terms and conditions contained in the Contract. Therefore any doubtful or ambiguous provisions contained herein shall not be construed against the party who physically prepared the Contract. Article headings appearing herein are inserted for convenience or reference only and shall in no way be construed to be interpretations of text.

(Remainder of page intentionally left blank)

Section 4

Description of Services and Deliverables

4.1. Background

The Information Technologies Division (ITD) of the City of Jacksonville, Florida is currently accepting bids to obtain source(s) of supply for the item(s) / service(s) as outlined in the bid documents provided. The purpose of this bid invitation is to obtain information about your firm, its ability to provide these items, and to obtain pricing commitments for the purchase of Professional/Technical Services to install new Audio Visual (AV) Equipment System in the new Cecil Field facility with installation of new equipment facilitating the broadcast of customizable content.

4.2. Scope of Services

The services sought under this RFP are generally described as follows: Information Technologies Division (ITD) of the City of Jacksonville, Florida is requesting proposals to install new Audio Visual (AV) Equipment System in the new Cecil Field facility with installation of new equipment that facilitates the broadcast of customizable content.

4.3. Statement of Work (SOW)-Requirements.

Contractor shall provide all labor (inclusive of project management fees), materials, equipment, software, hardware, hardware installation, custom plenum cable, custom connectors, custom installation hardware, custom programming, tools of trade, supervision and transportation as per statement of work, plans and drawings.

1. Contractor must provide a separate project plan and statement of work (SOW) with associated timelines for each item in Statement of Work (SOW) Requirements. The complete project must be ready for final testing by a date that shall be mutually agreed upon after award, vendor must be on-site at [Time] [AM OR PM] EST to monitor systems during the live facility activity.
2. Contractor must provide a document showing Project Manager contact information for the duration of the project.
3. A documented Solution Warranty of 12 months will be activated on Go-Live date.
4. Evidence to be provided by the contractor that the Audio and Video systems and applications will be supported for a minimum of 5 years.
5. 911 BACKUP FACILITY CALL CENTER will be in-service 24 hours a day starting June 2019. Non-customer impacting work can be performed and completed prior to in-service date. Customer impacting work will need to be scheduled and approved as per our Jacksonville Information Technologies Division (ITD) - Change Management process while facility rooms are not in use.
6. Project plan and time-line: cabling infrastructure must be installed by a date to be mutually agreed upon after award. Hardware, software and equipment must be on-site and ready to be installed and configured to begin on a date to be mutually agreed upon after award, then proceed with installation throughout a date to be mutually agreed upon after award (Completion).

Call Center Room:

Vendor shall install part of the AV system equipment in Call Center Room (room 109). The AV system shall have ten (10) 86-inch commercial display monitors. The system shall be able to be controlled via two (2) Touch-Screens (15.6-inch display) in the Call Center room, located at the JSO and JFRD command stations, to control display output to the Call Center Room commercial displays. The Call Center Room Touch-Screens shall be able to control and be able to receive/display video. The AV system shall be able to receive input from ten (10) computer generated signal, two (2) Wi-Fi connected devices and four cable tuners (not part of RFP) to be managed via the Touch-Screens located in the Call Center Room.

Multipurpose Room:

Vendor shall install part of the AV system equipment in Multipurpose Room (room 112). The AV system shall have two (2) 86-inch commercial display monitors and a commercial projector (HD DLP 3500 Lumen)/fabric-display. The audio system shall have four (4) ceiling mounted speakers that receive its input from three (3) inputs, Projector and the two (2) display monitors. The system shall be able to be controlled via one (1) Touch-Screen (7-inch display) located in the Multipurpose Room.

Break Room:
Vendor shall install part of the AV system equipment in Break Room (room 111). The AV system shall have one (1) 55-inch commercial display that will receive input from one (1) cable tuners (not part of RFP).

Server Room:
Vendor shall install SERVER ROOM equipment in City Of Jacksonville provided equipment racks located in the SERVER ROOM, room number 104, 5847 AVIATION AVENUE, JACKSONVILLE, FLORIDA, 32221.

Bid Requirements:

a) Non-network rack equipment shall be installed by vendor in existing/provided **SERVER ROOM ITD RACK SR2-CABINET 6.**
b) Network rack equipment (network switches) shall be installed by vendor in existing/provided **SERVER ROOM ITD RACK NR1-RACK 3.**
c) **Use the following table provided part numbers as a reference to equivalent COJ approved vendor equipment:**

Part Number	Description	Qty	Notes/Location
Projector/Display and Accessories:			
C861Q	NEC 86" Ultra High Definition Commercial Display	**12**	10 - Call Center 2 - Multipurpose Room
XTM1U	Chief X-Large Fusion Micro-Adjustable Tilt Wall Mount	**12**	10 - Call Center 2 - Multipurpose Room
55F1600	Hisense 55" Class Full HD Commercial TV	**1**	Break Room
MTM1U	Chief Medium Fusion Micro-Adjustable Tilt Wall Mount	**1**	Break Room
FCA800	Chief Fusion 8" Above/Below Shelf for Large Displays	**1**	Break Room
PX747-4K	ViewSonic 4K Ultra HD DLP 3500 Lumen Projector	**1**	Multipurpose Room (North Wall)
SYS474UW	Chief Suspended Ceiling Projector System w/ Storage - White	**1**	Multipurpose Room (North Wall)
21796LSI	DaLite Tensioned Advantage Electrol - 58" x 104" (119" diag) HD Progressive 1.1 Fabric with Projector Interface	**1**	Multipurpose Room (North Wall)
Video:			
M720Q	LENOVO	**11**	10 – SERVER ROOM RACK (SR2-CABINET 6) 1 – Multi Purpose Room
R9861520NA	Barcos CSE-200 Wireless Presenter, incl CS-200 Base, Tray, 2 Buttons	**3**	2 – SERVER ROOM RACK (SR2-CABINET 6) 1 – Multipurpose Room
DM-NVX-350	Crestron DigitalMedia 4K60 4:4:4 HDR Network AV Encoder/Decoder	**13**	10 – Call Center (BEHIND TV) 3 – Multipurpose Room * *BEHIND TV/wall boxes (Call Center) and Projector; POE powered
DM-NVX-350C	Crestron DigitalMedia 4K60 4:4:4 HDR Network AV Encoder/Decoder Card	**2**	SERVER ROOM RACK (SR2-CABINET 6) DMF-CI-8-1 (1) DMF-CI-8-2 (1) 2 – Touch-Screens Call Center Room
DMF-CI-8	Crestron DigitalMedia Card Chassis for DM-NVX-C & DMCF, 8 Slots	**4**	SERVER ROOM RACK (SR2-CABINET 6)
DM-NVX-E30	DigitalMedia 4K60 4:4:4 HDR Network AV Encoder	**2**	Multipurpose Room* 1– PC 1 – Barco * POE powered
DM-NVX-E30C	DigitalMedia 4K60 4:4:4 HDR Network AV Encoder Card	**26**	SERVER ROOM RACK (SR2-CABINET 6) DMF-CI-8-1 (6) DMF-CI-8-2 (6) DMF-CI-8-3 (6) DMF-CI-8-4 (8)

Part Number	Description	Qty	Notes/Location
			10 – PCs 4 – Tuners 2 – Barcos 10 – Multiwindow Processors
DM-TX-4K-202-C	Crestron 4K DigitalMedia 8G+ Transmitter 202	**2**	SERVER ROOM RACK (SR2-CABINET 6) 2 - Touch-Screens Call Center Room
HD-WP-4K-401-C	Crestron 4K Multi-Window Video Processor with HDBaseT & HDMI Outputs	**2**	SERVER ROOM RACK (SR2-CABINET 6)
Audio:			
AMP-HD2SIC64	OWI Three Source, Integratable, 6" Amplified, In Ceiling Speakers - Four Speaker Package	**1**	Multipurpose Room (ceiling)
Control:			
TSW-760-B-S	Crestron 7" Touch Screen - Black	**1**	Multipurpose Room
TS-1542-TILT-B-S	Crestron 15.6" HD Touch Screen, Tabletop Tilt, Black	**2**	Call Center (JSO/JFRD lead desks)
PWE-4803RU	Crestron PoE Injector	**1**	SERVER ROOM RACK (SR2-CABINET 6) * POE to Multipurpose Room/Touch-Screen
CP3N	Crestron 3-Series Control System	**1**	SERVER ROOM RACK (SR2-CABINET 6)
DM-XIO-DIR-80	Crestron DigitalMedia XiO Director – Virtual Switching Appliance for 80 Endpoints	**1**	SERVER ROOM RACK (SR2-CABINET 6)
DM-PSU-ULTRA-MIDSPAN	Crestron DigitalMedia Ultra Midspan PoDM++ Injector	**2**	SERVER ROOM RACK (SR2-CABINET 6) POE to Call Center Room/Touch-Screens
PD-9524G	Microsemi 24-port Managed Gigabit Midspan Power Injector	**1**	SERVER ROOM RACK (NR1-RACK 3) * *POE to Call Center Room
16701	Extreme X460-G2-24t-10GE4-Base-Unit	**1**	SERVER ROOM RACK (NR1-RACK 3)
16702	Extreme X460-G2-48t-10GE4-Base-Unit	**1**	SERVER ROOM RACK (NR1-RACK 3)
16710	Extreme X460-G2 VIM-2q (Module)	**2**	SERVER ROOM RACK (NR1-RACK 3) 1 – 16701 1 – 16702
10943	Extreme 300W AC PSU FB (Module)	**2**	SERVER ROOM RACK (NR1-RACK 3) 1 – 16701 1 – 16702
10946	Extreme X460-G2 Fan Module FB (Module)	**2**	SERVER ROOM RACK (NR1-RACK 3) 1 – 16701 1 – 16702
10311	Extreme QSFP+ passive copper cable, 0.5M	**2**	SERVER ROOM RACK (NR1-RACK 3) 1 – 16701 1 – 16702

4.4. Delivery

Vendor shall store and stage equipment which shall be delivered to the customer location as the project phases require equipment inventory, delivery and installation on location: 5847 AVIATION AVENUE, JACKSONVILLE, FLORIDA, 32221. Contacts: Information Technologies Division (ITD) Gary Steffens, Enterprise Architect Manager garys@coj.net (w) 904-860-2499, ITD Robert Gray, Infrastructure Manager grayr@coj.net, (w) 904-255-8065, ITD Pieter Jansen Sr. Project Manager pjansen@coj.net (w) 904-255-8099

If applicable, a packing list shall accompany all shipments, which shall indicate, at a minimum, the following; purchase order number, item number and description, date of shipment, quantity ordered and shipped, unit prices, and unit of measure.

Attachment A – Response Format

To maintain comparability and facilitate the evaluation process, Responses shall be organized in the manner set forth below. Tab delineations for each of the five sections would be helpful.

1) **Title Page:** Include RFP Title, RFP Number, Contractor's full name, address, phone number.

2) **Cover Letter:** Include the following:

   - Date of Letter.
   - RFP Title and Number.
   - Contractor's full name, address and phone number.
   - Names of the persons who will be authorized to make representations for the Contractor, their titles, addresses (including email address) and telephone numbers.
   - Contractor's Federal Employer ID Number.
   - Acknowledgement that (i) the Response is based on the terms set forth in the RFP and all amendments thereto posted on Buyer's website as of the date of the Response, and (ii) the Contractor will be responsible for monitoring Buyer's website for subsequent amendments and for either maintaining, amending or withdrawing the Response prior to the Response Due Date based on those subsequent amendments.
   - Signature of Authorized Representative.

3) **Required Forms.** Attach all forms identified in Section 1 or in Attachments C or F, each signed by an authorized representative. Examples of the forms that may be required include:

   - Price Sheet. (Form 1)
   - Conflict of Interest Certificate. (Form 2)
   - Insurance Agent Acknowledgment. (Form 3)
   - Business References. (Form 4)
   - Equal Business Opportunity Program Forms (if required, in Attachment C).
   - Federal Forms (if required, in Exhibit A and B).
   - Proposal Bond (if applicable).

4) **Proof of Minimum Requirements.** Responses will ONLY be accepted from companies meeting the minimum requirements in Section 1.4 of the RFP. Contractor must provide clear documentation on Company letterhead with a maximum of 2 pages of how the minimum requirements will be met.

5) **Statement of Qualifications.** This portion of the Response will be used to provide the information Buyer needs to evaluate how well the Contractor meets the criteria listed in Attachment B – Evaluation Criteria. Failure to provide adequate information on any criterion will result in lower scores and could result in rejection of the Response as non-responsive. Please divide this portion of the Response into subsections that correspond to each of the listed criteria.

Attachment B– Evaluation Criteria

The evaluations shall be based upon the following criteria, and Contractors are requested to provide, as a minimum, the information listed under each criterion. Failure to provide adequate information on any criterion shall result in lower scores and could result in rejection of the proposal as non-responsive. The response to each of the criterion shall be evaluated relative to the other responses received and the contract shall be awarded to the highest scoring, responsive, responsible Contractor for the Evaluation Criteria. Contractors are encouraged to arrange their responses in a format that shall offer ready review and evaluation of each criterion. Please note that **100** points is the maximum total.

MAXIMUM POINTS	EVALUATION CRITERIA
60	Form 1 –LUMP SUM PRICE/PRICE SHEET (lowest price receives a higher score) (The contractor submitting the lowest cost to the City shall receive the maximum number of points for cost, 60 points. Each sub-sequentially higher cost shall be divided into the lowest cost received and the products score % will be multiplied by the maximum points available to render the points.) Score = (Lowest Bid/The Bid) X 60)
10	Installation References - Form 4 (more Public Sector Audio Video integrations receive a higher score)
20	Project Plan, SOW and Timeline to meet the requirements (see Section 4.3.6)
10	Project Resource Resume and Qualifications (see Section 1.4, Item 1c)

Attachment C – Equal Business Opportunity Program Requirements

Encouragement Plan

It is an official policy of the City of Jacksonville to encourage the maximum participation of **Jacksonville Small Emerging Business (JSEB)** in its contract awards based upon availability.

This project has been designated to be under the Equal Business Opportunity Program and has been selected to utilize the following method for achieving JSEB utilization and goals under the Equal Business Opportunity Program: **The Encouragement Plan.**

Under the encouragement plan, vendors are required to make all efforts reasonably necessary to ensure that City certified JSEB have a full and fair opportunity to compete for performance on this project.

Bidders/Suppliers/Consultants or any entity doing business with the City shall not discriminate on the basis of race, ethnicity, national origin or gender in the award and performance of the work under this contract.

Please use the attached form (Schedule of Participation) to submit JSEB Participation on this Bid. You may contact the City's Equal Business Opportunity Office for a copy of the JSEB directory or visit our web site at www.JSEB.coj.net.

(REMAINDER OF THIS PAGE LEFT INTENTIONALLY BLANK)

JSEB FORM 1
CITY OF JACKSONVILLE SMALL & EMERGING BUSINESSES PROGRAM

SCHEDULE OF JSEB SUBCONTRACTOR/SUBCONSULTANT

NAME OF BIDDER _____

PROJECT TITLE _____

BID NUMBER _____ TOTAL BASE BID AMOUNT _____

***Please list all JSEBs**

NAME OF SUB FIRM	ADDRESS OF FIRM	TYPE OF SUB (if certified)	TYPE OF WORK TO BE PERFORMED	TOTAL CONTRACT VALUE

The undersigned acknowledges and agrees that, if any of the above-listed JSEBs are not, for any reason, properly certified with the City, in accordance with Ordinance 2004-602, at the time of bid opening, the same will not be counted toward meeting the participation percentage goal as defined herein.

The undersigned will enter into a formal Agreement with the JSEB Suppliers/Consultants/Subcontractors identified herein for work listed in this schedule, as well as any applicable alternates, conditioned upon execution of a contract with the City of Jacksonville. Under penalties of perjury I declare that I have read the foregoing conditions and instructions and the facts are true to the best of my knowledge and beliefs.

Signature: _____ Title: _____ Date: _____
(Signature of Prime Contractor)

Print Name: _____

Attach additional list of subcontractors/sub-consultants as needed

JSEB FORM 2
CITY OF JACKSONVILLE SMALL & EMERGING BUSINESSES PROGRAM
LETTER OF INTENT

TO PERFORM AS A SUPPLIER/CONSULTANT/SUBCONTRACTOR and **to be utilized by JSEBs only**

_____

(Name of JSEB Supplier/Consultant/Subcontractor)

NAME OF PROJECT: _____ BID NO _____

I, the undersigned, understand that the price below is representative of my intent to perform the scope of work stated below. I further understand that this price is subject to increase or decrease due to the City of Jacksonville bid requirements. All work must meet the City of Jacksonville bid specifications.

***Scope of Work**	***Total Price of work to be performed or materials to be supplied including Sales Tax**
_____	_____
_____	

_____ _____ _____

Signature of JSEB Supplier/Consultant/Subcontractor Title Date

*Scope of Work and Price are covered under Base Bid only.

Total price must be filled in on this form in order for participation to be considered valid. This form must be used for Letter of Intent.

JSEB FORM 3

CITY OF JACKSONVILLE SMALL & EMERGING BUSINESS PROGRAM

FINANCE & ADMINISTRATION DEPARTMENT CONSULTANT AND CONTRACTOR'S MONTHLY REPORT

PRIME CONTRACTOR NAME: _____ PROJECT TITLE: _____

PROFESSIONAL SERVICES NO. _____ - OR - CITY BID NO.:

CURRENT CONTRACT TOTAL AMOUNT $_____ CITY CONTRACT NO. _____

INVOICE INFORMATION

INVOICE NO.: _____ CURRENT INVOICE $: _____

FOR PERIOD ENDING DATE: _____ CUMULATIVE INVOICED $: _____

CONTRACT % COMPLETE:

CONTRACT GOAL TRACKING

JSBE/MBE GOAL $: *PRIOR MONTH* _____ **JSEB/MBE GOAL % :**

CUMULATIVE **JSEB/MBE $:** *PRIOR MONTH* _____

CUMULATIVE **NON-JSEB/MBE $:** _____ *FORMULA FOR CUMULATIVE MONTH %:* **CUMULATIVE $ / CUMULATIVE $ INVOICED**

CUMULATIVE **JSEB/MBE $:** _____ CUMULATIVE **JSEB/MBE %** : _____

CUMULATIVE **NON-JSEB $:** _____ CUMULATIVE **NON-JSEB %** : _____

JSEB/MBE SUBCONTRACTORS TO BE PAID FROM THIS INVOICE

COMPANY NAME	FEDERAL I.D. NO.	ZIP CODE	SDBE TYPE [1]	TYPE OF WORK [2]	$ THIS PAYMENT
Use Sheet 2 if additional lines are needed.				TOTAL	

NON-JSEB SUBCONTRACTORS TO BE PAID FROM THIS INVOICE

COMPANY NAME	FEDERAL I.D. NO.	ZIP CODE		TYPE OF WORK	$ THIS PAYMENT
Use Sheet 3 if additional lines are needed.				TOTAL	

MBE (Minority Business Enterprise)/**JSEB** (Jacksonville Small Emerging Business) **TYPES: AA:** African- American; **WBE:** Woman; **HA**: Hispanic-American; **AS**: Asian-American; **NA**: Native-American; **JSBE:** Jacksonville Small Emerging Business **TYPE OF WORK**: Examples: Catering, Clerical, Consulting, Engineering, Hauling, Janitorial, Masonry, Site Clearing, Technical Support

FOR CITY OF JACKSONVILLE USE ONLY

DATE PROCESSED	DOCUMENT NO.	INDEX CODE – SUBOBJECT - PROJECT NO. – DETAIL	$ THIS PAYMENT

Notes:

1. THIS MONTHLY FORM MUST BE COMPLETED AND SUBMITTED WITH ALL REQUESTS FOR PAYMENT AND FINAL PAYMENT.
2. Contractor shall attach to this form a typewritten explanation of any differences in JSEB/MBE participation from original contract commitment.

JSEB FORM 4
CITY OF JACKSONVILLE SMALL & EMERGING BUSINESS PROGRAM

JSEB GOOD FAITH EFFORT DOCUMENTATION

The intent of this form is to document the good faith effort attempts made by the apparent low bidder in soliciting JSEB firms to meet the JSEB project goal. Please note that the project goal will not be waived and the contractor must make efforts to achieve the goal throughout the life of the contract.

Every work type where there is a certified JSEB, the apparent low bidder must submit the form as follows:
1 available JSEB – must contact 1 JSEB
2-5 available JSEB – must contact 3 JSEBs minimum 6-7
available JSEBs – must contact 4 JSEBs minimum 8-9
available JSEBs – must contact 5 JSEBs minimum
10 or more available JSEBs – must contact 6 JSEBs minimum

All information submitted on this form is subject to audit by the JSEB Office

Date Submitted: _____ Bid Number:_____ Agency:_____

Contractor Name:_____Company Address:_____

City_____ State:_____Zip code:_____Phone:_____

Goal Percentage:_____Commitment Percentage:_____ Unattained Percentage:_____

I certify that the information contained in this good faith effort documentation form is true and correct to the best of my knowledge. I further understand that any willful falsification, fraudulent statement or misrepresentation will result in appropriate sanctions which may involve debarment and/or prosecution under applicable State and Federal laws.

Bidder/Authorized Representative Signature: _____

Representative Title:_____Date:_____

Witness:_____Date: _____

JSEB FORM 4 (Cont.)
CITY OF JACKSONVILLE SMALL & EMERGING BUSINESSES PROGRAM

GOOD FAITH EFFORT DOCUMENTATION

Work Type Number	Description of Work, Service or	JSEB Firm Name		
Contact Name (First and Last)	Contact Date	Contact Method	Contact Results	Bid Amount
1.				
2.				
3.				
Comments:				

Work Type Number	Description of Work, Service or Material	JSEB Firm Name		
Contact Name (First and Last)	Contact Date	Contact Method	Contact Results	Bid Amount
1.				
2.				
3.				
Comments:				

Work Type Number	Description of Work, Service or	JSEB Firm Name		
Contact Name (First and Last)	Contact Date	Contact Method	Contact Results	Bid Amount
1.				
2.				
3.				
Comments:				

JSEB FORM 4 (Cont.)
CITY OF JACKSONVILLE SMALL & EMERGING BUSINESSES PROGRAM

GOOD FAITH EFFORT DOCUMENTATION

GOOD FAITH EFFORTS

Proposers who fail to meet the stated JSEB participation goals set forth in Section "J" are required to submit with their proposal all efforts that would demonstrate a "Good Faith Effort" in the solicitation of subcontractors to meet the JSEB participation goals on this project.

The following categories, without limitations, may be utilized in considering Good Faith Efforts as outlined in Chapter 126, Jacksonville Ordinance code:

(1) A contact log showing the name, address, and contact number (phone or fax) used to contact the proposed certified subcontractors, nature of work requested for quote, date of contact, person making the effort;

(2) The description of work for which a quote was requested;

(3) The amount of the quote given, if one was obtained;

(4) The list of divisions of work not subcontracted and an explanation why not; and

(5) Subcontractor information as requested by forms developed by the Department.

NOTE: The City will investigate and verify information submitted in determining Good Faith Effort, and will compare the same with the performance of other proposers' attempts to meet the participation goals defined herein.

SOLICITATION EFFORTS - should include your efforts to solicit quotes, through all reasonable and available means, the interest of all certified firms who have the capability to perform the work of the contract. The bidder should ensure that the requests are made within sufficient time to allow JSEB firms to respond. The contractor should take the initiative to contact firms which have indicated an interest in participating as a subcontractor/supplier.

ADDITIONAL EFFORTS - Utilizing the services offered by the City of Jacksonville Small and Emerging Business Office for assistance with recruitment efforts. Contractors are encouraged to undertake and document any other efforts taken in their attempt to fulfill the project goal.

Attachment D

SERVICES CONTRACT
BETWEEN
[THE CITY OF JACKSONVILLE]
AND
INSERT CORPORATE NAME OF CONTRACTOR
FOR
INSERT SUMMARY OF SERVICES TO BE PERFORMED

THIS CONTRACT, made and entered into this ___ day of _____, 201__ (the "Effective Date"), by and between the CITY OF JACKSONVILLE (the "CITY"), a municipal corporation existing under the Constitution and the laws of the State of Florida, and _____(the "CONTRACTOR"), a _____corporation authorized to transact business in Florida and with its principal offices at _____.

WHEREAS, the CITY (as the "Buyer") issued a Request for Proposal No. _____ (the "RFP") for certain services described in the RFP (the "Services"); and

WHEREAS, based on CONTRACTOR'S response to the RFP dated _____, consisting of ____ pages (the "Response"), the CITY has awarded this Contract to CONTRACTOR;

NOW THEREFORE, in consideration of the premises and the mutual covenants contained below, the parties agree as follows:

1. **Performance of Services.** The Services will be performed by CONTRACTOR as specified in the RFP and the Response.

2. **Compensation**. CONTRACTOR will be paid by the CITY for the Services [as follows: _____] or [as specified on the Price Sheets attached as Form 1].

3. **Maximum Indebtedness.** As required by Section 106.431, *Ordinance Code*, the CITY's maximum indebtedness, for all products and services under this Contract shall be a fixed monetary amount not-to-exceed _____($_____).

4. **Term.** The initial term of this Contract shall commence on the Effective Date and shall expire on _____, unless sooner terminated by either party in accordance with the terms of the RFP. This Contract may be renewed for up to _____additional one (1) year periods by (i) the CITY, it its sole discretion, upon written notice to CONTRACTOR at least sixty (60) days prior to end of the then-current term, or (ii) upon the mutual agreement of the parties.

5. **Contract Documents.** This Contract consists of the following documents which are hereby incorporated as if fully set forth herein and which, in case of conflict, shall have priority in the order listed:
   - This document, as modified by any subsequent signed amendments
   - Any amendments to the RFP
   - Specific Information Regarding The RFP (Section 1 of the RFP)
   - Description of Services and Deliverables (Section 4 of the RFP)
   - General Instructions to Respondents (Section 2 of the RFP)
   - General Contract Conditions (Section 3 of the RFP)
   - Any Purchase Order under the Contract
   - The Response, provided that any terms in the Response that are prohibited under the RFP shall not be included in this Contract.

6. **Notices.** All notices under this Agreement shall be in writing and shall be delivered by certified mail, return receipt requested, or by other delivery with receipt to the following:

As to the CITY:

_____
_____
_____

As to the CONTRACTOR:

_____
_____
_____

7. **Contract Managers.** Each Party will designate a Contract Manager during the term of this Contract whose responsibility shall be to oversee the Party's performance of its duties and obligations pursuant to the terms of this Contract. As of the Effective Date, CITY'S Contract Manager is __[Insert Name and Address]__, and the CONTRACTOR'S Contract Manager is __[Insert Name and Address]__. Each Party shall provide prompt written notice to the other Party of any changes to the Party's Contract Manager or his or her contact information; provided, such changes shall not be deemed Contract amendments and may be provided via email.

8. **Entire Agreement.** This Contract constitutes the entire agreement between the parties hereto for the Services to be performed and furnished by the CONTRACTOR. No statement, representation, writing, understanding, agreement, course of action or course of conduct, made by either party or any representative of either party, which is not expressed herein shall be binding. CONTRACTOR may not unilaterally modify the terms of this Contract by affixing additional terms to materials delivered to the CITY (e.g., "shrink wrap" terms accompanying or affixed to a deliverable) or by including such terms on a purchase order or payment document. CONTRACTOR acknowledges that it is entering into this Contract for its own purposes and not for the benefit of any third party.

9. **Amendments.** All changes to, additions to, modifications of, or amendment to this Contract, or any of the terms, provisions and conditions hereof, shall be binding only when in writing and signed by the authorized officer, agent or representative of each of the parties hereto.

10. **Counterparts.** This Contract, and all amendments thereto, may be executed in several counterparts, each of which shall be deemed an original, and all of such counterparts together shall constitute one and the same instrument.

[Remainder of page left blank intentionally. Signature page follows immediately.]

IN WITNESS WHEREOF, the parties have executed this Contract as of the day and year first above written.

ATTEST:

By _____
James R. McCain, Jr.
Corporation Secretary

CITY OF JACKSONVILLE

By _____
Lenny Curry
Mayor

In accordance with the *Ordinance Code*, of the City of Jacksonville, I do hereby certify that there is an unexpended, unencumbered, and un-impounded balance in the appropriation sufficient to cover the foregoing agreement; and that provision has been made for the payment of monies provided therein to be paid.

_____
Director of Finance
CITY Contract Number:_____

Form Approved:

_____
Office of General Counsel

ATTEST:

By_____
Signature

_____
Type/Print Name

_____
Title

INSERT NAME OF CONTRACTOR.

By_____
Signature

_____
Type/Print Name

_____
Title

Attachment E

DISQUALIFIED/PROBATIONARY VENDORS LIST

In accordance with the City's Procurement Code 126.201 (1) (1), the Chief of Procurement and all agencies are advised to cease doing business with disqualified vendors as they appear on this list. However, any existing contracts held by the vendors listed below should be completed.

VENDOR	VENDOR-FEIN #	Date of Disqualification	Eligibility Reinstatement Date
Able Lumber and Supply	593198312	07/18/1997	07/18/1998
*Aquino Construction Company, Inc.	00001424	04/19/2018	04/19/2021
Armored Car Services	593191058	02/10/2000	02/10/2001
*Arnett Contracting, Inc.	223965485	06/04/2010	06/04/2013
*Aztec American Builders, Inc.	00012849	01/10/2018	01/10/2021
** B. Robinson Corporation	00008704	10/24/2018	10/24/2019
**B & H Full Service Cleaning, Inc.	*****3840	11/19/2010	11/19/2011
C & H Construction	593216284	03/07/2002	03/07/2003
Carolina Paper Mill	593579372	10/20/1980	10/20/1981
*Cleft Landscape Mgmt.	590036843	10/26/2000	10/26/2001
Concerned Citizens of Developing the Disable, Inc. d/b/a A.I.C.R.		07/23/1998	07/23/1999
Court Yard Concepts	593198312	05/07/1997	05/07/1998
Creed Company	45357941	03/07/1990	03/07/1991
D&D Site Work, Inc.		10/9/2013	10/9/2016
Elite Public Safety		03/25/2000	03/25/2001
Fire Defense Centers	593035606	06/08/1987	06/08/1988
*First Coast Site Contractors	273995727	10/26/2012	10/26/2013
**Francbeth, Inc.	593658944	7/9/2014	7/9/2015
*GA Janitorial Cleaning Svcs., Inc.	010684614	08/31/2009	08/31/2010
George Patterson & Assoc.	59317759	06/05/1998	06/05/1999
G K Solutions	593541756	09/08/1999	09/08/2000
**J&J Recycling and Demo, LLC	*****1758	4/21/2015	10/21/2015
Kingdom Cleaning	*****6694/*****9588	10/20/2015	10/20/2017
*Process Server Enterprises, LLC	263336079	04/29/2010	04/29/2011
**Ray T. Freiha Construction, Inc.	593615599	06/01/2010	06/01/2012
*The Real Dirt Busters	*****3042	10/26/2012	10/26/2015
**Sheza General Contractors, Inc.	593430930	11/02/2010	11/02/2011
** Synot Roofing & Construction LLC	*****6145	08/28/2018	02/28/2019
Tiger Tale Publication		05/21/1998	05/21/1999
Whittle & Sons		07/25/1980	07/25/1981

***Vendors disqualified/debarred from bidding as Prime and/or Sub Contractors**
****Vendors placed on probation for a period of 6 months or more**

Revised 3/11/19

Attachment F

Indemnification

Vendor shall hold harmless, indemnify, and defend the City of Jacksonville and City's members, officers, officials, employees and agents (collectively the "City Indemnified Parties") from and against, without limitation, any and all claims, suits, actions, losses, damages, injuries, liabilities, fines, penalties, costs and expenses of whatsoever kind or nature, which may be incurred by, charged to or recovered from any of the foregoing City Indemnified Parties for:

1. General Tort Liability, for any negligent act, error or omission, recklessness or intentionally wrongful conduct on the part of the Vendor that causes injury (whether mental or corporeal) to persons (including death) or damage to property, whether arising out of or incidental to the Vendor's performance of the Contract, operations, services or work performed hereunder; and

2. Intellectual Property Liability, arising directly or indirectly out of any allegation that the Services, any product generated by the Services, or any part of the Services as contemplated in this Contract, constitutes an infringement of any copyright, patent, trade secret or any other intellectual property right. If in any suit or proceeding, the Services, or any product generated by the Services, is held to constitute an infringement and its use is permanently enjoined, the Vendor shall, immediately, make every reasonable effort to secure within 60 days, for the City Indemnified Parties a license, authorizing the continued use of the Service or product. If the Vendor fails to secure such a license for the City Indemnified Parties, then the Vendor shall replace the Service or product with a non-infringing Service or product or modify such Service or product in a way satisfactory to Buyer, so that the Service or product is non-infringing.

If a Vendor exercises its rights and obligations under this Contract, the Vendor will (1) provide reasonable notice to the City Indemnified Parties of the applicable claim or liability, and (2) allow City Indemnified Parties, at their own expense, to participate in the litigation of such claim or liability to protect their interests. **The scope and terms of the indemnity obligations herein described are separate and apart from, and shall not be limited by any insurance provided pursuant to the Contract or otherwise. Such terms of indemnity shall survive the expiration or termination of the Contract.**

Attachment G

Insurance Requirements

Without limiting its liability under this Contract, Vendor shall at all times during the term of this Contract procure prior to commencement of work and maintain at its sole expense during the life of this Contract (and Vendor shall require its, subcontractors, laborers, materialmen and suppliers to provide, as applicable), insurance of the types and limits not less than amounts stated below:

Insurance Coverages

Schedule	Limits
Cyber Liability & Data Storage	$1,000,000 per Claim and Aggregate

Such insurance shall be on a form acceptable to the City and shall cover, at a minimum, the following:

- Data Loss and System Damage Liability (when applicable)
- Security Liability
- Privacy Liability
- Privacy/Security Breach Response Coverage, including Notification Expenses

Such Cyber Liability coverage must be provided on an Occurrence Form or, if on a Claims Made Form, the retroactive date must be no later than the first date of this Contract and such claims-made coverage must respond to all claims reported within three years following the period for which coverage is required and which would have been covered had the coverage been on an occurrence basis.

Commercial General Liability	$2,000,000	General Aggregate
	$2,000,000	Products & Comp. Ops. Agg.
	$1,000,000	Personal/Advertising Injury
	$1,000,000	Each Occurrence
	$ 50,000	Fire Damage
	$ 5,000	Medical Expenses

Such insurance shall be no more restrictive than that provided by the most recent version of the standard Commercial General Liability Form (ISO Form CG 00 01) as filed for use in the State of Florida without any restrictive endorsements other than those reasonably required by the City's Office of Insurance and Risk Management. An Excess Liability policy or Umbrella policy can be used to satisfy the above limits.

If Vendor will be performing its services onsite then the Vendor must maintain the additional below coverages:

Automobile Liability $1,000,000 Combined Single Limit
(Coverage for all automobiles, owned, hired or non-owned used in performance of the Contract)

Such insurance shall be no more restrictive than that provided by the most recent version of the standard Business Auto Coverage Form (ISO Form CA0001) as filed for use in the State of Florida without any restrictive endorsements other than those which are required by the State of Florida, or equivalent manuscript form, must be attached to the policy equivalent endorsement as filed with ISO (i.e., mandatory endorsement).

Worker's Compensation	Florida Statutory Coverage
Employer's Liability	$ 100,000 Each Accident
	$ 500,000 Disease Policy Limit
	$ 100,000 Each Employee/Disease

This insurance shall cover the Vendor (and, to the extent they are not otherwise insured, its subcontractors) for those sources of liability which would be covered by the latest edition of the standard Workers' Compensation policy, as filed for use in the State of Florida by the National Council on Compensation Insurance (NCCI),

without any restrictive endorsements other than the Florida Employers Liability Coverage Endorsement (NCCI Form WC 09 03), those which are required by the State of Florida, or any restrictive NCCI endorsements which, under an NCCI filing, must be attached to the policy (i.e., mandatory endorsements). In addition to coverage for the Florida Workers' Compensation Act, where appropriate, coverage is to be included for the Federal Employers' Liability Act, USL&H and Jones, and any other applicable federal or state law.

Additional Insurance Provisions

A. Certificates of Insurance. Vendor_shall deliver the City Certificates of Insurance that shows the corresponding **City Contract or Bid Number** in the Description, **Additional Insureds, Waivers of Subrogation** and **Primary & Non-Contributory statement** as provided below. The certificates of insurance shall be mailed to the City of Jacksonville (Attention: Chief of Risk Management), 117 W. Duval Street, Suite 335, Jacksonville, Florida 32202.

B. Additional Insured: All insurance except Worker's Compensation shall be endorsed to name the City of Jacksonville and City's members, officials, officers, employees and agents as Additional Insured. Additional Insured for General Liability shall be in a form no more restrictive than CG2010 and CG2037, Automobile Liability CA2048.

C. Waiver of Subrogation. All required insurance policies shall be endorsed to provide for a waiver of underwriter's rights of subrogation in favor of the City of Jacksonville and its members, officials, officers employees and agents.

D. Vendor's Insurance Primary. The insurance provided by the Vendor shall apply on a primary basis to, and shall not require contribution from, any other insurance or self-insurance maintained by the City or any City members, officials, officers, employees and agents.

E. Deductible or Self-Insured Retention Provisions. All deductibles and self-insured retentions associated with coverages required for compliance with this Contract shall remain the sole and exclusive responsibility of the named insured Vendor. Under no circumstances will the City of Jacksonville and its members, officers, directors, employees, representatives, and agents be responsible for paying any deductible or self-insured retentions related to this Contract.

F. Vendor's Insurance Additional Remedy. Compliance with the insurance requirements of this Contract shall not limit the liability of the Vendor or its Subcontractors, employees or agents to the City or others. Any remedy provided to City or City's members, officials, officers, employees or agents shall be in addition to and not in lieu of any other remedy available under this Contract or otherwise.

G. Waiver/Estoppel. Neither approval by City nor failure to disapprove the insurance furnished by Vendor shall relieve Vendor of Vendor's full responsibility to provide insurance as required under this Contract.

H. Carrier Qualifications. The above insurance shall be written by an insurer holding a current certificate of authority pursuant to chapter 624, Florida State or a company that is declared as an approved Surplus Lines carrier under Chapter 626 Florida Statutes. Such Insurance shall be written by an insurer with an A.M. Best Rating of A- VII or better.

I. Notice. The Vendor shall provide an endorsement issued by the insurer to provide the City thirty (30) days prior written notice of any change in the above insurance coverage limits or cancellation, including expiration or non-renewal. If such endorsement is not provided, the Vendor, as applicable, shall provide said a thirty (30) days written notice of any change in the above coverages or limits, coverage being suspended, voided, cancelled, including expiration or non-renewal.

J. Survival. Anything to the contrary notwithstanding, the liabilities of the Vendor under this Contract shall survive and not be terminated, reduced or otherwise limited by any expiration or termination of insurance coverage.

K. Additional Insurance. Depending upon the nature of any aspect of any project and its accompanying exposures and liabilities, the City may reasonably require additional insurance coverages in amounts responsive to those liabilities, which may or may not require that the City also be named as an additional insured.

Attachment H

Protest Procedures

CITY OF JACKSONVILLE

PROCUREMENT DIVISION

214 N. Hogan Street - 8th floor, Jacksonville, Florida 32202
(904) 255-8800-Ph; (904) 255-8837-Fax; www.coj.net

PROCUREMENT PROTEST PROCEDURES

126.106(e) PROTEST PROCEDURES

126.106(e)(1) Purpose and Scope
126.106(e)(2) Definitions
126.106(e)(3) Timely Notice of Protest
126.106(e)(4) Extension Request / Supplemental Protest Documentation
126.106(e)(5) Delivery
126.106(e)(6) Process
126.106(e)(7) Protest Hearing Rules and Procedures
126.106(e)(8) Independent Agency, Board or Delegated Authority

126.106(e)(1) Purpose and Scope

(a) These protest procedures are promulgated pursuant to § 126.106(e) of the Jacksonville Ordinance Code (the "Code"), which authorizes the Chief of the Procurement Division (the "Chief") to "prepare and publish rules and regulations governing bid protests." In the event a court of competent jurisdiction declares any provision of these Procurement Protest Procedures to be unconstitutional, invalid, or otherwise unenforceable, then all remaining provisions shall be severable, valid and enforceable regardless of the invalidity of any other provision.

(b) In accordance with the procedures contained herein, any person or entity that is adversely affected by a decision or an intended decision concerning a solicitation, solicitation documents, award, or any other process or procedure prescribed in the Code and who has standing to protest said decision or intended decision under Florida law (the "Protestant"), must timely file a written Notice of Protest seeking to challenge the decision or intended decision. The issue(s) raised and the information contained in the Notice of Protest and any supplemental documentation filed in accordance with § 126.106(e)(4), hereof, must clearly identify and explain the factual and legal basis for any relief sought, and shall be the only issue(s) and information the Protestant may present for consideration before the applicable committee.

126.106(e)(2) Definitions

For the purpose of these Bid Protest Procedures, the following definitions are provided:

(a) "Competitive solicitation" or "solicitation" shall include without limitation an invitation to bid, competitive sealed bid, multi-step competitive sealed bid, competitive sealed proposal, or a request for proposals and/or qualifications.

(b) "Posting" means the notification of solicitations, decisions or intended decision, or other matters relating to procurement on a centralized Internet website, by placing the same on the bulletin board(s) designated by the Procurement Division for this purpose, or as may be consistent with § 126.102(m) of the Code.

(c) "Exceptional purchase" means any purchase excepted by law or rule from the requirements for competitive solicitation, including without limitation purchases pursuant to §§ 126.107, 126.206, 126.207, 126.211, 126.307, 126.309, 126.311, 126.312, or 126.313 of the Code.

Revision and Effective Date: 03/13/2012

(d) "Electronic transfer" is limited solely to facsimile transmissions that appear legibly on paper at the place of filing.

(e) "Final Agency Action" means a final decision that results from a proceeding hereunder, and includes actions which are affirmative, negative, injunctive, or declaratory in form.

(f) "Procurement process" has the same meaning as "contract solicitation or award process."

126.106(e)(3) Timely Notice of Protest

(a) Recommendations of Award and/or Bid Rejection. A Protestant shall have 48 hours after either the posting or written notification of a decision or intended decision, whichever is earlier, in which to file a written Notice of Protest in order to timely challenge or seek relief from a Procurement Division recommended award of an exceptional purchase or an award or recommended conclusion to any bid or proposal solicitation process, including without limitation: (i) a recommendation to reject a bid or proposal; (ii) a contract award; or (iii) the short-listing of bidders or proposers.

(b) Bid/Proposal Specifications and/or Requirements. A Protestant shall have 10 business days after the posting of a solicitation or 48 hours after the posted date and time of a pre-bid or pre-proposal conference, whichever is earlier, or 48 hours after the posting of an addendum, in which to file a written Notice of Protest in order to timely challenge the requirements, terms and/or conditions contained in bid or proposal documents, including without limitation any provisions governing or establishing: (i) the basis for making the award in question; (ii) evaluation criteria; (iii) equipment, product, or material specifications; (iv) proposed project schedules; (v) statements regarding participation goals or other equal opportunity measures; or (vi) other general solicitation or project requirements.

(c) Computation of Time • The computation of the time limitations or periods contained herein shall be governed by and shall be pursuant to Florida Rule of Civil Procedure 1.090(a). Failure to file a written Notice of Protest within the applicable time limitation or period shall constitute a waiver of any right, remedy, or relief available hereunder.

(d) Form and Content of the Notice of Protest - A written Notice of Protest shall: (i) be addressed to the Chief; (ii) identify the solicitation, decision, or recommended award in question by number and title or any other language sufficient to enable the Chief to identify the same; (iii) state the timeliness of the protest; (iv) state Protestant's legal standing to protest; and (v) clearly state with particularity the issue(s), material fact(s) and legal authority upon which the protest is based.

126.106(e)(4) Request for Extension to File Supplemental Protest Documentation

At the time of filing a timely Notice of Protest hereunder, a Protestant may request an extension of three (3) business days after the date its Notice of Protest is timely received, in which to provide supplemental protest documentation. Failure to do so or to timely submit the supplemental protest documentation shall constitute a waiver of any right to the same.

126.106(e)(5) Delivery

The timely filing of a Notice of Protest shall be accomplished when said notice is actually received by the Procurement Division within the applicable time limitation or period contained herein. Filing a notice may be accomplished by manual transfer via hand-delivery or mail to the Chief of Procurement at 214 N. Hogan Street, 8th floor, Jacksonville, Florida 32202 or by electronic transfer via facsimile to (904) 255-8837. The responsibility and burden of proof that its Notice of Protest has been timely and properly received shall rest with the Protestant, regardless as to the method of delivery employed.

126.106(e)(6) Process

(a) Upon receipt of a timely filed written Notice of Protest, the Chief or his/her designee shall schedule and provide notice of the time, date and place that the protest will be heard. The protest will be heard before the General Governmental Awards Committee ("GGAC"), the Professional Services Evaluation Committee ("PSEC"), or the Competitive Sealed Proposal Evaluation Committee ("CSPEC"), whichever is applicable. The Chief or his/her designee shall have the discretion to proceed with the solicitation or contract award process in question or to suspend the same pending the resolution of the protest. To the extent the Chief or his/her designee decides to exercise his/her discretion not to suspend the solicitation or contract award process pending the resolution of the protest, the Chief or his/her designee shall set forth in writing the particular facts and/or circumstances upon which his/her decision is based.

(b) Those persons or entities, other than the Protestant, who will be directly affected by the resolution of the protest shall be given notice of the protest hearing, and the Notice of Protest and any supplemental protest

documentation shall be made available to them upon a written request for the same.

(c) When a Notice of Protest is filed pursuant to § 126.106(e)(3)(b), hereof, the Chief or applicable awards committee chairperson shall have the discretion to direct that the solicitation in question not be opened pending the resolution of the protest.

126.106(e)(7) Protest Hearing Rules and Procedures

(a) Hearings hereunder shall be heard before the applicable committee, and shall begin with a general statement of the rules and procedures prescribed herein by a representative of the committee, followed by a general statement of the facts by a representative of the Procurement Division. Representatives of the Protestant, limited solely to its owners, officers, employees and/or legal counsel, will then be required to present its case based solely upon the issue(s) and information contained in the Notice of Protest and any timely submitted supplemental protest documentation. Those persons or entities, other than the Protestant, who have legal standing and will be directly affected by the resolution of the protest will be given an opportunity to be heard and to present information before the committee, which will be followed by a statement and the presentation of information from the Procurement Division and other governmental representatives. The Protestant must establish by the preponderance of the evidence that the protest should be granted based upon the law, facts and information presented. The committee is entitled to ask questions of any party at any time during the hearing.

(b) For hearings hereunder, the formal rules of evidence pursuant to the Florida Evidence Code may be relaxed at the sole discretion of the presiding chairperson of the applicable committee. Hearsay evidence may be admissible and used to supplement or explain other evidence.

(c) Unless otherwise provided by the Code, the burden of proof shall rest with the Protestant. The standard of proof for proceedings hereunder shall be whether a Procurement Division recommendation or the decision or intended decision in question was clearly erroneous, arbitrary or capricious, fraudulent, or otherwise without any basis in fact or law. In any protest proceeding challenging a decision or intended decision to reject all bids, proposals, or replies, the standard of review shall be whether the decision or intended decision is illegal, arbitrary, dishonest, or fraudulent.

(d) A majority vote of the members of the applicable committee shall be required to grant a protest, hereunder; otherwise, the protest shall be denied, and, upon execution by the Mayor or his designee, said vote and/or decision of the applicable awards committee shall be posted and shall represent final agency action.

126.106(e)(8) Independent Agency, Board or Delegated Authority

If a protest is filed and the solicitation is for the benefit of an independent agency, board, or delegated authority that has its own established procurement procedure and does not use the City's procurement process and/or protest procedures, then the person or entity protesting must follow the protest procedures of that independent agency, board, or delegated authority.

CERTIFICATE OF ADOPTION AND IMPLEMENTATION

The preceding Procurement Protest Procedures are hereby adopted this 1st day of October, 2011, by the undersigned Chief of Procurement for immediate implementation, and will remain in full force and effect until such time as they may be formally revised, amended, supplemented, superseded, or abolished.

Procurement Division

Gregory Pease, Chief
City of Jacksonville
214 N. Hogan Street, 8th floor
Jacksonville, Florida 32202
(904) 255-8800 - Phone
(904) 255-8837 - Facsimile
gpease@coj.net

Revision and Effective Date: 03/13/2012

FORM 1

Price Sheet

ITEM NO.	DESCRIPTION	PRICE
01	Contractor to provide all labor, project management fees, materials, equipment, software, hardware, tools of trade, supervision and transportation for the completion of Cecil Field Audio Video System project, as per Statement of Work, plans and drawings, as listed on Section 4.3.	$
	LUMP SUM PRICE	$

FORM 2
CONFLICT OF INTEREST CERTIFICATE

Bidder must execute either Section I or Section II hereunder relative to Section 126.201, *Ordinance Code*, and Section 112.313(12), *Florida Statutes*. Failure to execute either Section may result in rejection of this proposal.

SECTION I

I hereby certify that no official or employee of the City or independent agency requiring the goods or services described in these specifications has a material financial interest in this company.

_____	_____
Signature	Company Name
_____	_____
Name of Official (Type or Print)	Business Address
	_____
	City, State, Zip Code

SECTION II

I hereby certify that the following named City official(s) and employee(s) having material financial interest(s) (in excess of 5%) in this company have filed Conflict of Interest Statements with the Supervisor of Elections, 105 East Monroe Street, Jacksonville, Duval County Florida, prior to bid opening.

Name	Title or Position	Date of Filing
_____	_____	_____
_____	_____	_____

_____	_____
Signature	Company Name
_____	_____
Name of Official (Type or Print)	Business Address
	_____
	City, State, Zip Code

PUBLIC OFFICIAL DISCLOSURE

Section 126.110 of the Purchasing Code requires that a public official who has a financial interest in a bid or contract make a disclosure at the time that the bid or contract is submitted or at the time that the public official acquires a financial interest in the bid or contract. Please provide disclosure, if applicable.

Public Official _____

Position Held: _____

Position or Relationship with Bidder: _____

FORM 3
INSURANCE AGENT ACKNOWLEDGMENT

RFP No. **ESC- [BID NO]**

Bidder must have their insurance agent execute the below statement. Failure to execute this statement may result in rejection of this bid proposal.

As insurance agent for_____,

I have read the Indemnification and Insurance Requirements relating to the above referenced bid and do certify that I can provide evidence of all required coverages, limits and additional provisions as stated in those documents.

_____	_____
Agent's Signature	Insurance Agency Name
_____	_____
Agent's Name (Type or Print)	Agent's License Number (Type or Print)

FORM 4
Business/Corporate References

Organization: _____

Contact Name: _____

Address: _____

Phone Number: _____

Email Address: _____

Industry: _____

Date and Scope of Successful Public Sector Audio and Video Installations:

_____

_____

_____

_____

_____

_____

_____

_____

_____

_____

_____

_____

_____

_____

FORM 4 (Continued)

Organization: _____

Contact Name: _____

Address: _____

Phone Number: _____

Email Address: _____

Industry: _____

Date and Scope of Successful Public Sector Audio and Video Installations:

_____

_____

_____

_____

_____

_____

_____

_____

_____

_____

_____

_____

_____

_____

FORM 4 (Continued)

Organization: _____

Contact Name: _____

Address: _____

Phone Number: _____

Email Address: _____

Industry: _____

Date and Scope of Successful Public Sector Audio and Video Installations:

_____

_____

_____

_____

_____

_____

_____

_____

_____

_____

_____

_____

_____

_____

FORM 5
NO BID FORM

UNABLE TO SUBMIT A BID? WE SINCERELY HOPE THIS IS NOT THE CASE.

If your firm cannot submit a bid at this time, please provide the information requested in the space provided below and return it to:

City of Jacksonville
Procurement Division
214 North Hogan St, Ste #105
Jacksonville, Florida 32202

We are unable to submit a bid at this time due to the following reasons:

_____

_____

_____

Name of Firm: _____

Signature & Title: _____

Street: _____

City: _____ State: _____ Zip: _____

PLEASE SUBMIT THIS FORM ONLY; DO NOT SEND BACK THE BID PACKAGE

EXHIBIT A

911 BACKUP FACILITY CALL CENTER - Diagrams

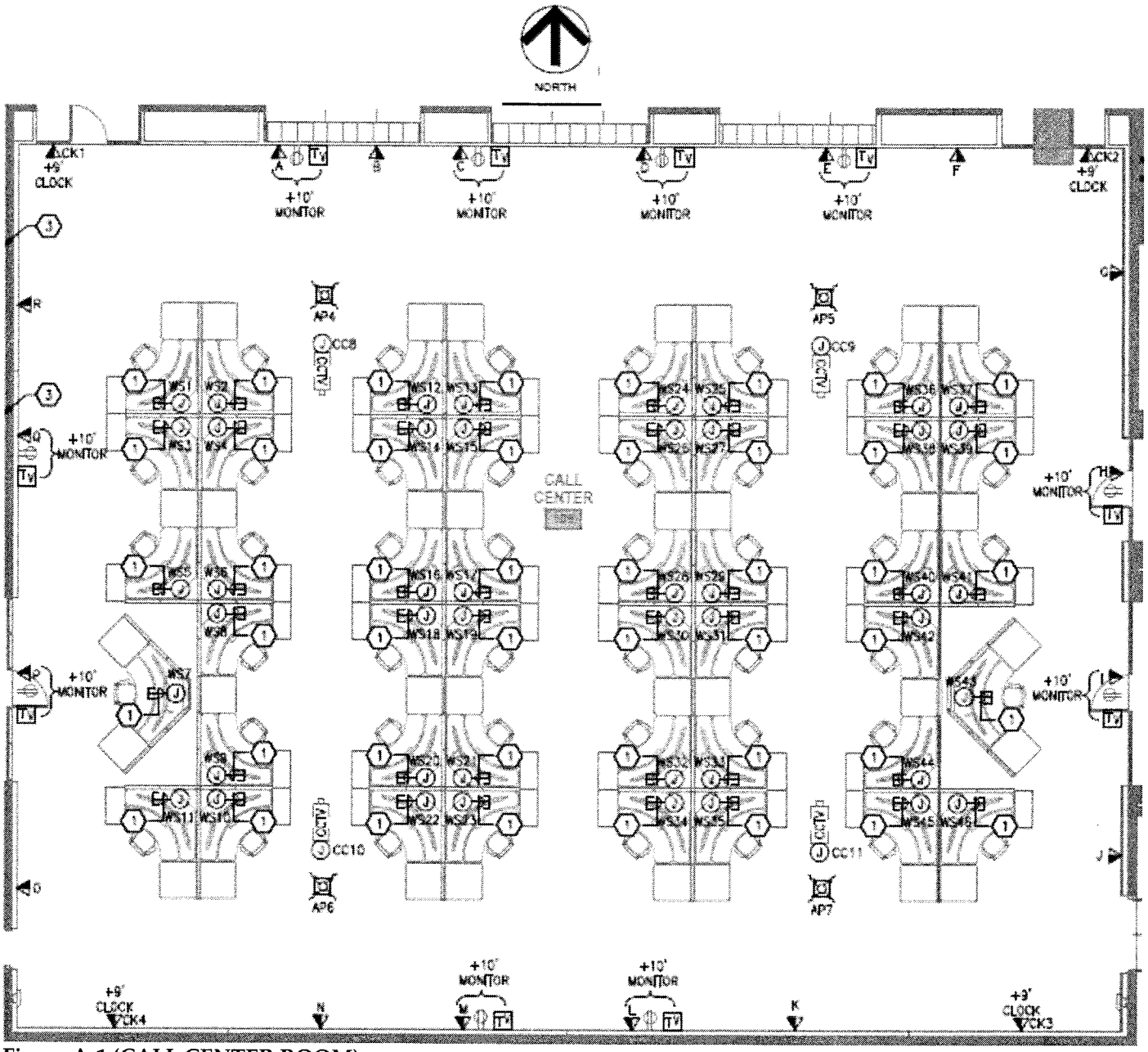

Figure A-1 (CALL CENTER ROOM)

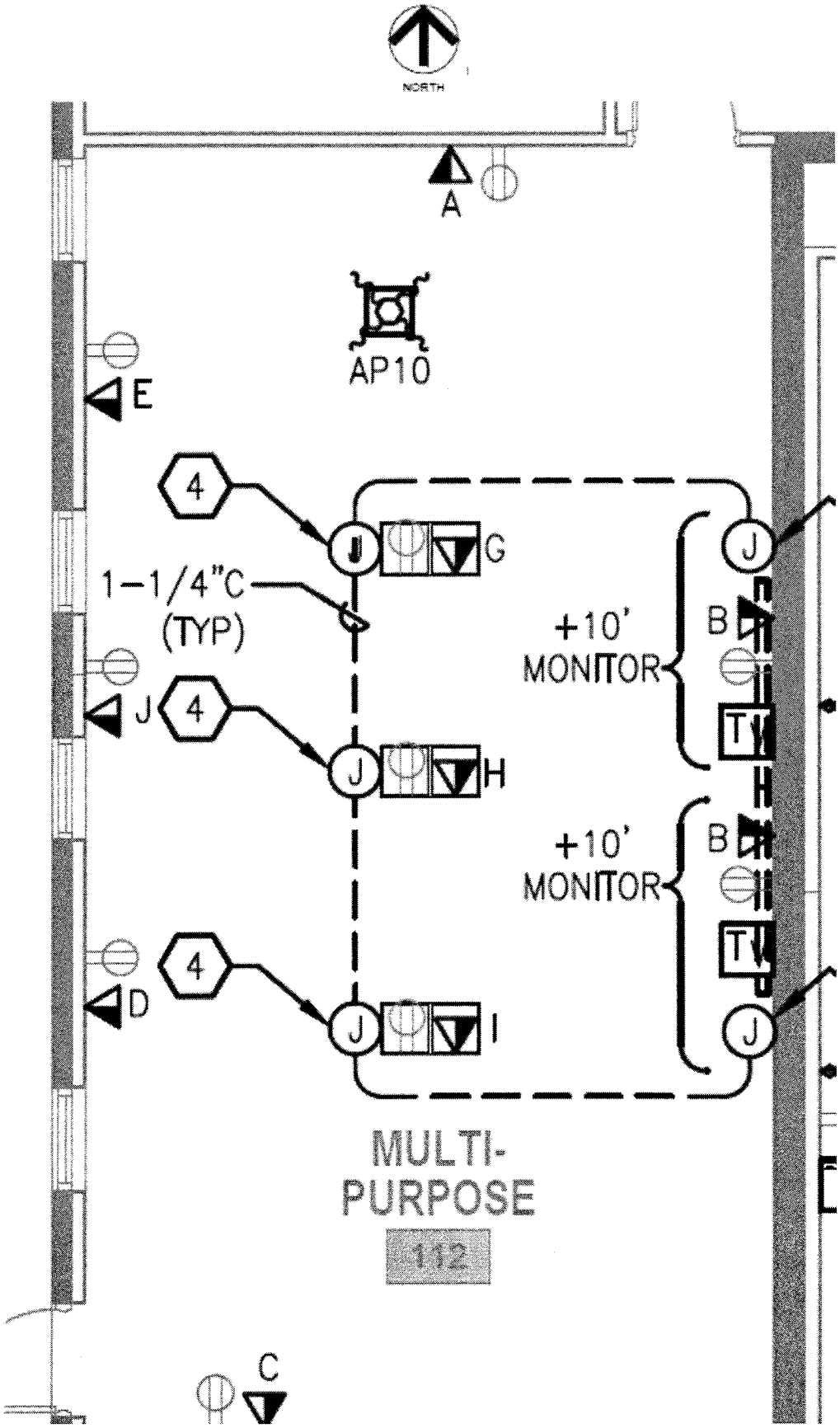

Figure A-2 (MULTI-PURPOSE ROOM)

EXHIBIT A (Continued)

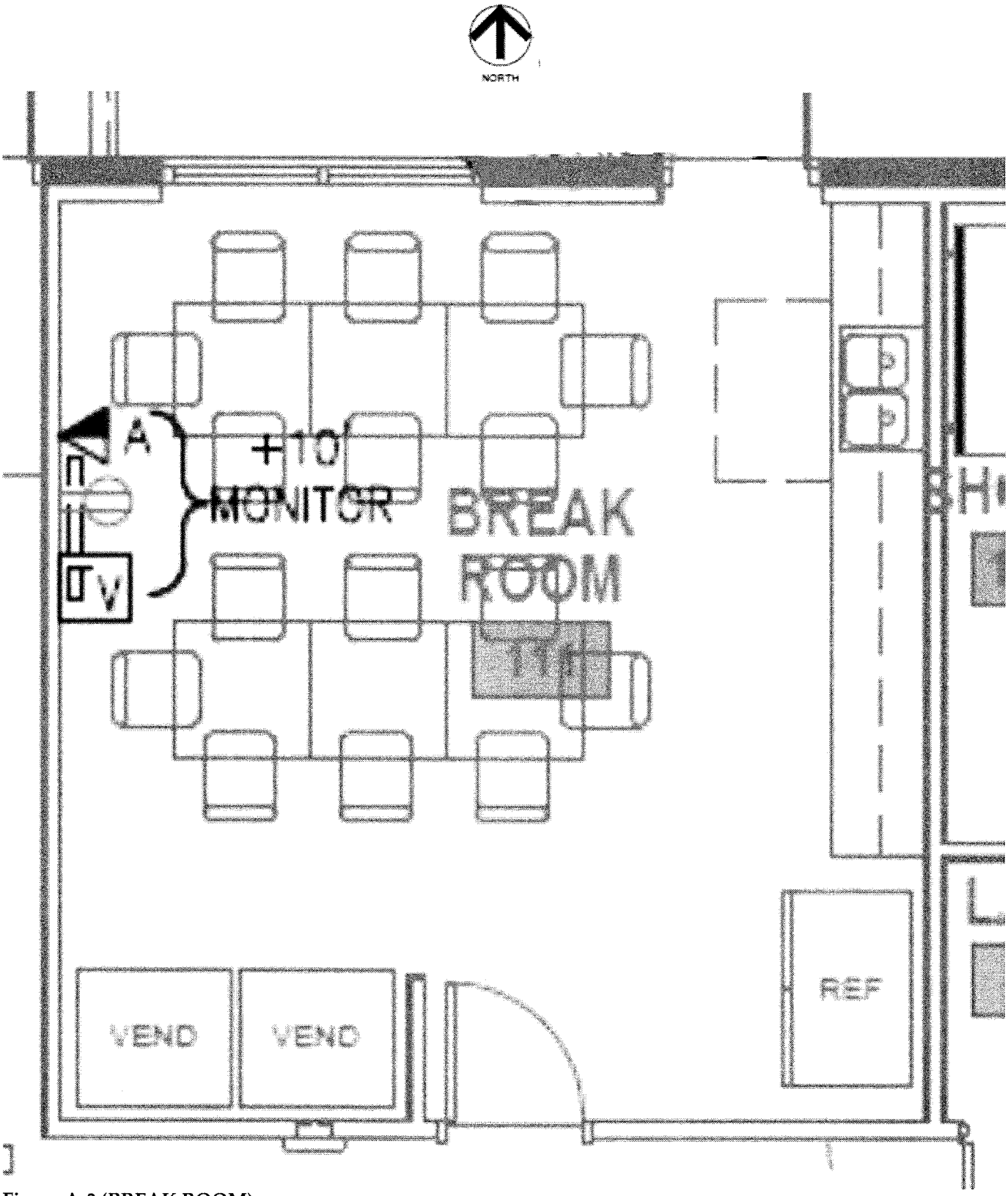

Figure A-3 (BREAK ROOM)

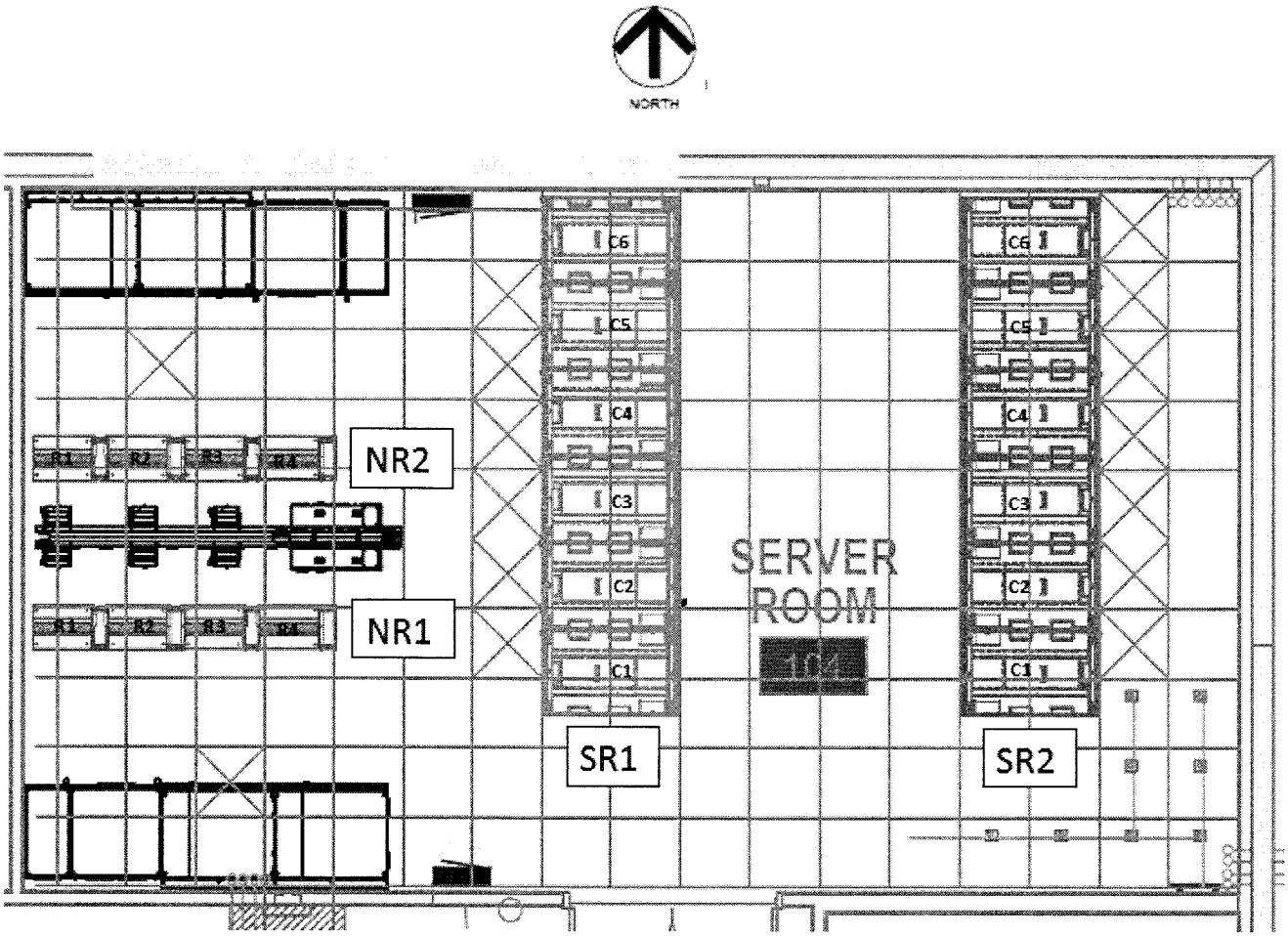

Figure A-4 (SERVER ROOM)

APPROVED
By Ann Willis at 4:03 pm, Apr 09, 2019

Competitive Sealed Proposal Evaluation Committee

PROCUREMENT DIVISION

ONE CITY. ONE JACKSONVILLE.

RFP SPECIFICATIONS

FOR

CECIL FIELD AUDIO VIDEO SYSTEM

Jacksonville City Information Technologies Division

BID NO: ESC- [BID NO]

OPEN DATE: [OPEN DATE]

TIME: [TIME] [AM OR PM]

PLACE: 1ST FLOOR, ED BALL BUILDING. 214 N. HOGAN ST, STE #110, JACKSONVILLE, FL

MANDATORY PRE-PROPOSAL CONFERENCE:
DATE: [PRE-PROPOSAL DATE(S)]
TIME: [TIME] [AM OR PM]
LOCATION: [PRE-PROPOSAL LOCATION]

CITY OF JACKSONVILLE
Procurement Division
Ed Ball Building
214 North Hogan Street, Suite 800 (8th Floor)
Jacksonville, Florida 32202
Phone: (904) 255-8800
Fax: (904) 255-8837

Lenny Curry
Mayor

Gregory Pease, Chief
Procurement Division

REQUEST FOR PROPOSAL

CECIL FIELD AUDIO VIDEO SYSTEM
ESC- [BID NO]
For
City of Jacksonville, Florida

SECTION 1

(Specific Information Regarding this RFP)

1.1 Introduction

The City of Jacksonville ("**Buyer**") intends to hire an individual or firm ("**Contractor**") to provide the services described in Section 1.2 of this Request for Proposal ("**RFP**"). Persons interested in submitting a response to this RFP (a "**Response**") should carefully review this RFP for instructions on how to respond and for the applicable contractual terms. This RFP is divided into the following sections:

Section 1	Specific Information Regarding This RFP
Section 2	General Instructions
Section 3	General Terms and Conditions of Agreement
Section 4	Description of Services (if referenced in Section 1.2 below)
Section 5	Exhibits
Attachment A	Response Format
Attachment B	Evaluation Criteria
Attachment C	Equal Business Opportunity Program Requirements
Attachment D	Sample Contract
Attachment E	Disqualified/Probationary Vendors List
Attachment F	Indemnification
Attachment G	Insurance Requirements
Attachment H	Protest Procedures
Form 1	Price Sheet
Form 2	Conflict of Interest Certificate
Form 3	Insurance Agent Acknowledgment
Form 4	Business/Corporate References
Form 5	No Bid Survey
Exhibit A	911 BACKUP FACILITY CALL CENTER – Diagram

In the event of conflicting provisions, the following sections of this RFP will have priority in the order listed: Section 1, Section 4, Section 2, Section 3, the Attachments, and the Forms.

1.2 Scope of Services.

The services sought under this RFP are generally described as follows: The Jacksonville City Information Technologies Division (ITD) of the City of Jacksonville, Florida is requesting proposals to install net new Audio Visual (AV) Equipment System in the new Cecil Field Facility.

Section 4, **Statement of Work (SOW) Requirements.**

1.3 Term of Agreement.

The term of agreement will commence upon execution of the Contract and will continue until project has been successfully completed and signed off by the ITD Project Manager and CIO (or designee). The Contract is subject to early termination as set forth elsewhere in this RFP.

1.4 Minimum Requirements for Contractors.

Contractors must satisfy the following mandatory minimum requirements in order to have their Responses evaluated. By submitting a Response, Contractor warrants and represents that it satisfies these requirements. Failure to meet these requirements will result in the Response not being evaluated and being rejected as non-responsive:

1. Contractor must be an Audio and Video Crestron Certified Partner and A/V integration provider
    a. The Contractor shall provide current proof of all business licenses required by local, state, and federal law as applicable.
    b. Contractor must provide proof of up to date Audio and Video Gold Partner status from Crestron
    c. Provide resume and qualifications of the resource(s) that will be used for the project
    d. Contractor must have local office presence to include local support
    e. Contractor must submit Insurance Agent Acknowledgement (Form 3) completed and signed by their insurance agent with their RFP response..
    f. If contractor uses sub-contractor resources, they must also be certified and insured
    g. The Contractor must provide a minimum of **three (3) contactable references** of installed systems similar in scope (see Form 4 - Business/Corporate References). The City reserves the right to contact references. Government references are encouraged. Provide reference information including but not limited to:
        i. Customer Contact Name, Phone Number, and Title
        ii. Organization Name and Address
        iii. Industry
        iv. Briefly describe the nature of the Audio / Video services provided
2. Project plan and time-line: cabling infrastructure must be installed by a date to be mutually agreed upon after award. Hardware, software and equipment must be on-site and ready to be installed and configured to begin on a date to be mutually agreed upon after award, then proceed with installation throughout a date to be mutually agreed upon after award (Completion).

Deleted: have the ability to obtain and maintain liability insurance as required by the City of Jacksonville and must submit with their response, a signed affidavit from their insurance provider stating they can provide all required coverage at the levels required by the RFP or a "FOR BID PURPOSES ONLY" certificate of insurance evidencing all coverages, limits and additional provisions as required by the RFP

1.5 Equal Business Opportunity Program.

It is an official policy of the City of Jacksonville to encourage the maximum participation of Jacksonville Small and Emerging Businesses (JSEBs) in its contract awards based upon availability. To participate as a JSEB on Buyer projects, a company must be certified as a JSEB with the City's Equal Business Opportunity Office.

This RFP and the resulting Contract are subject to requirements of the "Encouragement Plan," which is fully described on Attachment C to this RFP.

Contractors may contact Buyer's Equal Business Opportunity Office at 904-255-8840 or find the JSEB directory on Buyer's website. Please contact the Contact Person identified in Section 1.12 if you are uncertain of Buyer's website address or if you experience problems accessing it.

1.6 Documents Available for Inspection.

Certifications of expertise

1.7 Federal Funds.

Federal funds will not be used as part of this solicitation.

1.8 Pre-Proposal Meeting.

There **will be one** (1) mandatory pre-proposal meetings scheduled for this RFP on **[DATE]** at **[Time] [AM OR PM]** located at **[Location Address]**.

1.9 Response Due Date.

The deadline for submitting responses to this RFP is **[DATE]** at **[Time] [AM OR PM]** ET. Please see Sections 2.3 and 2.4 for more details.

1.10 Response Delivery Location.

Responses must be delivered to the following location:

City of Jacksonville
Procurement Division
214 N. Hogan Street, Room 105
Jacksonville, Florida 32202

1.11 Response Presentation (mandatory)

Vendors shall be required to provide a presentation, up to 1 hour followed by a 30-minute Q&A session. The presentations will occur one (1) week after all bids have closed, they will be recorded and will be part of the scoring process.

1.12 **Response Opening.**
Responses received shall be publicly announced and recorded at 2:00 PM on the Response Due Date in meeting room #110, 1st Floor, Ed Ball Bldg., 214 N. Hogan Street.

1.13 **Contact Person.**
If any questions arise during the request for proposal period of this Project, contact Ruben Ola, Purchasing Analyst Procurement Division, at RubenO@coj.net.

Please refer to Section 2.9 for further information on who may and may not be contacted regarding this RFP.

1.14 **Questions and Requests for Amendments**
Any questions, requests for information or requests for amendments to this RFP must be submitted in accordance with Section 2.2 of this RFP.

1.15 **Special Instructions:**
The following special instructions shall apply to this RFP and shall supersede any conflicting provisions in Section 2 (General Instructions).

1.16 **Special Contract Terms:**
The following special contract terms shall apply to this RFP and shall supersede any conflicting provisions in Section 3 (General Terms and Conditions of Agreement):

A. **Performance Standards:** **N/A**

B. **Proposal Bond:** **N/A**

C. **Performance Bond:** **N/A**

D. **Other Provisions:** The City of Jacksonville reserves the right to terminate or renegotiate the contract if there are any industry changes that i) lower the fees or ii) requires new hardware.

(Remainder of page intentionally left blank)

Section 2

General Instructions
(RFP for CSPEC Services)

Contents

2.1 **Application of Chapter 126 and Other Laws.**
2.2 **Questions and Requests for Amendment to RFP.**
2.3 **Format/Content of Responses.**
2.4 **Submission of Responses.**
2.5 **Evaluation of Responses.**
2.6 **Award of Contract**
2.7 **Terms of Agreement.**
2.8 **Public Meetings and Special Accommodations.**
2.9 **Ex-Parte Communications.**
2.10 **Cost of Developing RFP Response.**
2.11 **Response Ownership.**
2.12 **Public Records Law; Process For Protecting Trade Secrets and Other Information.**
2.13 **Multiple Responses from Same Contractor; No Collusion.**
2.14 **Conflict of Interest.**
2.15 **Convicted Vendor List.**
2.16 **Discriminatory Vendor List.**
2.17 **Contractor Representations.**
2.18 **Protests.**

2.1 **Application of Chapter 126 and Other Laws.** The selection of and contracting with a Contractor under the RFP will be in accordance with Part 2 of Chapter 126, of the Jacksonville Ordinance Code. Other provisions of federal, state, county and local laws, and administrative procedures, policies or rules may apply to the RFP and any claims or disputes arising hereunder. Lack of knowledge of the law or administrative procedures, policies, or rules by any Contractor shall not constitute a cognizable defense against their effect.

2.2 **Questions and Requests for Amendment to RFP.** If a Contractor (i) has questions about the RFP, (ii) finds discrepancies, omissions or ambiguities in the RFP, or (iii) believes any term or condition of the RFP is unreasonable, Contractor should request an amendment to the RFP. The request should reference the RFP section at issue and include any specific language that Contractor recommends using.

All requests for amendment must be submitted to the Contact Person in writing (via US mail, courier, e-mail, or hand delivery) and, unless otherwise specified in the RFP, be received by the Contact Person at least **ten (10) calendar days** before the Response Due Date. Questions and requests for amendments directed to the Contact Person or to any other Buyer personnel shall not constitute a formal protest of the RFP. Failure to request an interpretation or change will be considered evidence that Contractor understands and agrees to the provisions of the RFP.

The posting of a written amendment is the only official method by which interpretations, clarifications, changes or additional information will be given by Buyer prior to the opening of Responses. Any other interpretation, clarification, change or information will have no legal effect.

Buyer reserves the right to amend, cancel or reissue the RFP at its discretion. This includes the right to change the Response Due Date and the Contract award date. Notice of all amendments and cancellations will be posted on Buyer's website (please contact the Contact Person if you are uncertain of the website address or if you experience problems accessing it). Contractor is responsible for monitoring this website for new or changing information.

2.3 Format/Content of Responses.

A. If a Response Format is specified in the RFP, Contractors should follow that format.

B. Responses should be prepared simply and economically, providing a straightforward, concise description of Contractor's ability to provide services sought by the RFP. Unnecessary brochures, artwork, expensive paper, and presentation aids are discouraged. Bindings and covers will be at Contractor's discretion.

C. When responding to specific questions, please reprint each question in its entirety before the response.

D. Responses shall be in ink or typewritten. All corrections must be initialed.

E. Response shall be limited to a page size of 8½" x 11". Font size less than 11-points is discouraged. The Response shall be indexed and all pages sequentially numbered.

F. **Except as may be specifically requested in the Response Format, Contractor may not impose any additional terms or conditions to any aspect of the RFP.** Buyer objects to and shall not be required to consider any additional terms or conditions submitted by Contractor, including any appearing in the Response. In submitting a Response, Contractor agrees that any additional terms or conditions shall have no force or effect. Any failure to comply with the terms and conditions of the RFP, including those specifying information that must be submitted with a Response, may result in rejection of the Response. **If Contractor desires a change or clarification to the terms or conditions of the RFP, Contractor must follow the process set forth in Section 2.2 ("Questions and Requests for Amendments").**

G. Unless otherwise requested by Buyer, Contractors should make only one proposal for each RFP item. Multiple offerings, alternates (unless any are specifically requested by Buyer) and/or stipulations may be cause for rejection of a Response C.

H. Price offerings shall be inclusive of ALL costs (including but not limited to administrative cost for submission of all required paperwork on Buyer's behalf and any other costs) and will be the only compensation given to Contractor for the required services herein.

I. All prices submitted under the RFP shall be indelible. The use of correction fluid or erasures to correct line item bid prices and/or quantities are not acceptable. Corrections must be by lineout of the incorrect figures, writing in of correct figures, and initialing of the corrections by the originator. Correction fluid or erasure corrected bids will be considered non-responsive for the corrected item(s) only and may render the entire Response as nonresponsive.

J. Failure to sign any form requiring a signature may be grounds for rejecting a Response.

2.4 Submission of Responses.

A. The location and deadline for submitting Responses is set forth in Section 1 of the RFP. Contractors are fully responsible for meeting these requirements. Reliance upon mail or public carrier is at Contractor's risk. **Late bids will not be considered.**

B. Contractor shall submit:

1) One (1) original signed version of its Response clearly marked as "ORIGINAL." The Response must be signed by an officer or employee having authority to legally bind Contractor.

2) Three (3) hard copies of the entire Response. c

3) One (1) digital scanned copy (in pdf format) of entire Response, on a separate CD- ROM or flash drive. Large files may be scanned as several separate PDF files.

All copies are to be placed in a sealed package. The outside must be marked with (i) the RFP title and number, and (ii) Contractor's name, address, contact person, and telephone number.

It is the sole responsibility of each Contractor to assure all copies are EXACT duplicates of the original Response. Photocopies or CD copies will be used for the purpose of evaluating the Responses. Any information contained in the original Response which has not been transferred to the CDs or photocopies will NOT be considered. The original document will be used solely for official record keeping and auditing purposes.

2.5 **Evaluation of Responses.**

A. Buyer will determine the qualifications, interest and availability of Contractors by reviewing all Responses and, when deemed necessary in the sole discretion of Buyer, by conducting formal interviews of selected Contractors.

B. Before making an award, Buyer reserves the right to seek clarifications, revisions, and information it deems necessary for the proper evaluation of Responses. Failure to provide any requested clarifications, revisions or information may result in rejection of the Response.

C. Buyer reserves the right to accept or reject any and all Responses, or separable portions thereof, and to waive any minor irregularity, technicality, or omission if Buyer determines that doing so will serve Buyer's best interests. Buyer may reject any Response not submitted in the manner specified by the RFP.

2.6 **Award of Contract**

A. The process for contract award is set forth in Jacksonville Ordinance Code Sections 126.204. Generally, Buyer will award the Contract to the responsible and responsive proposer whose Response is determined in writing to be the most advantageous to the City of Jacksonville, based solely on the relative importance assigned to price and of the criteria set forth in Attachment B. The award may be contingent on the outcome of direct negotiations under Section 126.201(d)(4) and 126.201(n), *Ordinance Code.* If an agreement cannot be reached with the highest ranked Contractor, Buyer reserves the right to make an award to the next highest ranked Contractor or subsequent Contractor(s) until an agreement is reached.

B. Buyer may make an award within sixty (60) days after the date of the Responses are due, during which period the Responses shall remain firm and shall not be withdrawn. Any Response that expresses a shorter duration may, in Buyer's sole discretion, be accepted or rejected. If award is not made within sixty (60) days, the Response shall remain firm until either the Contract is awarded, or Buyer receives from Contractor written notice that the Response is withdrawn. [Note: Withdrawal of a Response may be requested within 72 hours (excluding State holidays, Saturdays and Sundays) after the date and time Responses are due. Buyer will not accept an amended Response after the date and time Responses are due.]

C. Except as may otherwise be expressly set forth in the RFP, Buyer intends to award one contract, but reserves the right to enter into a contract with multiple Contractors or to reject all Responses.

D. Based on the evaluation results, Buyer shall electronically post a notice of intended award at Buyer's website. Please contact the Contact Person if you are uncertain of Buyer's website address or if you experience problems accessing it. Any person who is adversely affected by the decision shall file with Buyer a notice of protest in accordance with the Protest provisions of the RFP. Buyer does not intend to provide tabulations or notices of award by telephone.

2.7 **Terms of Agreement.** After award to the successful Contractor, Buyer and Contractor will promptly enter into a written agreement (the "Contract") incorporating the terms of the RFP, the successful Response, and other terms and conditions as may be agreed to between the parties. To the extent the Response contains exceptions to or modifications of the RFP, such exceptions or modifications are stricken unless Buyer affirmatively accepts the exceptions or modifications in the Contract. The Contract will be substantially in the form set forth in an attachment to the RFP. Buyer will not be obligated to pay Contractor for the RFP services until the Contract is signed by both parties. Buyer retains the right to reject all bids and/or amend its notice of award at any time prior to the full execution of the Contract.

If the successful Contractor fails to perform the Services as agreed, Buyer reserves the right to (i) issue a new solicitation for the Services; (ii) reopen the RFP for the purpose of awarding a second contract to another Contractor in accordance with the criteria and processes set forth herein; and/or (iii) take such other actions permitted by law.

2.8 **Public Meetings and Special Accommodations**. Any meetings of the RFP evaluation committee (i.e., the Competitive Sealed Proposal Evaluation Committee), shall be noticed on Buyer's website and shall comply with Florida's Open Meetings Laws. Please contact the Contact Person if you are uncertain of Buyer's website address or if you experience problems accessing it. Persons requiring a special accommodation because of a disability should contact the Contact Person identified in Section 1 at least forty-eight (48) hours prior to the meeting.

2.9 **Ex-Parte Communications**. Communications regarding the RFP by a potential vendor, service provider, bidder, lobbyist or consultant to city employees, staff, or hired consultants are prohibited. This prohibition includes

communications with the Buyer's Office of General Counsel unless the Contact Person has authorized those communications in advance. Violations may result in the rejection/disqualification of a Response.

These prohibitions on ex-parted communications do not apply to the following:

- communications regarding the RFP to the Chief of the Procurement Division or the Contact Person, provided the communication is limited strictly to matters of process or procedure already contained in the RFP.
- communications with the city employee responsible for administering the Jacksonville Small Emerging Business Program, provided the communication is limited strictly to matters of programmatic process or procedures.
- communications at any pre-proposal conferences.
- communications with the Office of Inspector General and his/her staff regarding any perceived inefficiency, misconduct or abuse by City employees.
- presentations before publicly noticed committee meetings.
- contract negotiations during any duly noticed public meeting.
- any duly noticed site visits to determine competency of contractors during the period between RFP opening and issuance of the Chief of Procurement Division's written recommendation.
- communications that are necessary for, and solely related to, the ordinary course of business concerning Buyer's existing contract(s) for the materials or services addressed in the RFP.

The period for these prohibitions commences upon the advertisement of the RFP and terminates after the Chief of the Procurement Division issues a written recommendation to the corresponding awarding committee. If the awarding committee refers the Chief's recommendation back for further review, the prohibitions shall be reinstated until such time as the Chief issues a subsequent recommendation.

2.10 **Cost of Developing RFP Response.** All costs related to the preparation of Responses and any related activities are the sole responsibility of Contractor. Buyer assumes no liability for any costs incurred by Contractors throughout the entire selection process.

2.11 **Response Ownership.** All Responses, including attachments, supplementary materials, addenda, etc., shall become property of Buyer and shall not be returned to Contractor. Buyer will have the right to use any and all ideas or adaptation of ideas presented in any Response. Acceptance or rejection of a Response shall not affect this right.

2.12 **Public Records Law; Process For Protecting Trade Secrets and Other Information.** Article 1, Section 24, Florida Constitution, guarantees every person access to all public records, and Section 119.011, Florida Statutes, provides a broad definition of public records. As such, all responses to the RFP are public records unless exempt by law. If Contractor considers any portion of its Response to be exempt from disclosure under Florida law, Contractor must provide Buyer with a separate redacted copy of the Response and briefly describe in writing the grounds for claiming exemption from the public records law, including the specific statutory citation. Contractor shall be responsible for defending its determination that the redacted portions of its Response are confidential, trade secret or otherwise not subject to disclosure. Further, Contractor shall protect, defend, and indemnify Buyer for any and all claims arising from or relating to Contractor's determination that the redacted portions of its Response are confidential, trade secret or otherwise not subject to disclosure. If Contractor fails to submit a Redacted Copy with its Response in accordance with Section 2.4 above, Buyer is authorized to produce the entire Response in answer to a public records request.

In accordance with Section 119.0701, Florida Statutes, the Contractor shall:

(a) Keep and maintain public records required by City to perform the services; and

(b) Upon request from City's custodian of public records, provide City with a copy of the requested records or allow records to be inspected or copied within a reasonable time at a cost that does not exceed the cost provided for in Chapter 119, Florida Statutes, or as otherwise provided by law; and

(c) Ensure that public records that are exempt or confidential and exempt from public records disclosure requirements are not disclosed except as authorized by law for the duration of the Contract term and following completion of this Contract if Contractor does not transfer the records to City; and

(d) Upon completion of this Contract, transfer to City at no cost all public records in possession of Contractor or keep and maintain public records required by City to perform the service. If Contractor transfers all public records to City upon completion of this Contract, Contractor shall destroy any duplicate public records that are exempt or confidential and exempt from public records disclosure requirements. If Contractor keeps and maintains public records upon completion of this Contract, Contractor shall meet all applicable requirements for retaining public records. All records stored electronically must be provided to City upon request from City's custodian of public records in a format that is compatible with City's information technology systems.

The above requirements apply to a "Contractor" as defined in Section, 119.0701, Florida Statutes.
IF CONTRACTOR HAS QUESTIONS REGARDING THE APPLICATION OF CHAPTER 119, FLORIDA STATUTES, TO THE CONTRACTOR'S DUTY TO PROVIDE PUBLIC RECORDS RELATING TO THIS CONTRACT, CONTACT THE CITY'S CUSTODIAN OF PUBLIC RECORDS AT (904) 630-7678; PRR@COJ.NET; CITY OF JACKSONVILLE, PUBLIC RECORDS REQUEST, 214 N. HOGAN STREET, SUITE 1180, JACKSONVILLE, FLORIDA 32202.

2.13 **Multiple Responses from Same Contractor; No Collusion.** More than one Response from an individual, firm, partnership, corporation or association under the same or different names is not permitted. Reasonable grounds for believing that a Contractor is involved in more than one Response for the same work will be cause for rejection of all Responses in which such Contractor is believed to be involved. Any or all Responses will be rejected if there is reason to believe that collusion exists between Contractors. Responses in which the prices obviously are unbalanced will be grounds for rejection.

2.14 **Conflict of Interest.** Section 126.110 of the Jacksonville Ordinance Code requires that a public official who has a financial interest in a bid or contract make a disclosure at the time that the bid or contract is submitted or at the time that the public official acquires a financial interest in the bid or contract, including but not limited to the public official's name, public office or position held, bid or proposal number, and the position or relationship of the public official with the bidder or Contractor. The parties will follow the provisions of Section 126.110, Jacksonville *Ordinance Code,* with respect to required disclosures by public officials who have or acquire a financial interest in a bid or contract with Buyer, to the extent the parties are aware of the same. All Contractors must submit the Conflict of Interest Certificate attached to the RFP.

2.15 **Convicted Vendor List.** A person or affiliate placed on the State of Florida convicted vendor list pursuant to Section 287.133, Florida Statutes, following a conviction for a public entity crime may not do any of the following for a period of 36 months from the date of being placed on the convicted vendor list:

- submit a bid on a contract to provide any goods or services to a public entity;
- submit a bid on a contract with a public entity for the construction or repair of a public building or public work;
- submit bids on leases of real property to a public entity;
- be awarded or perform work as a contractor, supplier, subcontractor, or consultant under a contract with any public entity; and
- transact business with any public entity in excess of the Category Two threshold amount provided in Section 287.017, Florida Statutes.

2.16 **Discriminatory Vendor List.** An entity or affiliate placed on the State of Florida discriminatory vendor list pursuant to Section 287.134, Florida Statutes, may not:

- submit a bid on a contract to provide any goods or services to a public entity;
- submit a bid on a contract with a public entity for the construction or repair of a public building or public work;
- submit bids on leases of real property to a public entity;
- be awarded or perform work as a contractor, supplier, sub-contractor, or consultant under a contract with any public entity; or

- transact business with any public entity.

2.17 **Contractor Representations.** In submitting a Response, Contractor understands, represents, and acknowledges the following (if Contractor cannot so certify to any of following, Contractor shall submit with its Response a written explanation of why it cannot do so).

- Contractor currently has no delinquent obligations to the City of Jacksonville or any of its independent agencies.
- The Response is submitted in good faith and without any prior or future consultation or agreement with any other respondent or potential respondent;
- To the best of the knowledge of the person signing the Response, neither the Contractor, its affiliates, subsidiaries, owners, partners, principals or officers:
  - is currently under investigation by any governmental authority for conspiracy or collusion with respect to bidding on any public contract;
  - is currently under suspension or debarment by any governmental authority in the United States;
  - has within the preceding three years been convicted of or had a civil judgment rendered against it, or is presently indicted for or otherwise criminally or civilly charged, in connection with (i) obtaining, attempting to obtain, or performing a federal, state, or local government transaction or public contract; (ii) violation of federal or state antitrust statutes; or (iii) commission of embezzlement, theft, forgery, bribery, falsification or destruction of records, making false statements, or receiving stolen property; or
  - has within the preceding three-year period had one or more federal, state, or local government contracts terminated for cause or default.
- If this Agreement is for goods or services of $1 million or more, the City, pursuant to Section 287.135(3)(c), Florida Statutes, may terminate this Agreement at City's option if Contractor:

  (a). Is found to have submitted a false certification under Section 287.135(5), Florida Statutes;
  (b). Has been placed on the Scrutinized Companies that Boycott Israel List created pursuant to Section 215.4725, Florida Statutes, or is engaged in a boycott of Israel;
  (c). Has been placed on the Scrutinized Companies with Activities in Sudan List or the Scrutinized Companies with Activities in the Iran Petroleum Energy Sector List created pursuant to Section 215.473, Florida Statutes; or
  (d). Has been engaged in business operations in Cuba or Syria.

- Contractor has read and understands the RFP terms and conditions, and the Response is submitted in conformance with those terms and conditions.
- All representations made by Contractor to Buyer in connection with the RFP have been made after a diligent inquiry of its employees and agents responsible for preparing, approving, or submitting the Response.
- Contractor shall indemnify, defend, and hold harmless Buyer and its employees against any cost, damage, or expense which may be incurred or be caused by any error in the Response.
- All information provided by, and representations made by, Contractor are material and important and may be relied upon by Buyer in awarding the Contract.

2.18 **Protests.** Any protest concerning the RFP shall be made in accordance with the Procurement Protest Procedures established pursuant to Section 126.106(e) of the Jacksonville Ordinance Code. A full copy of the procedures is available on Buyer's website and can also be obtained by contacting Buyer's Contact Person. Please contact the Contact Person if you are uncertain of Buyer's website address or if you experience problems accessing it. Questions and requests made to the Contact Person shall not constitute formal Notice of Protest.

The Procurement Protest Procedures include the following provisions:

- a Protestant shall have 10 business days after the posting of a solicitation or 48 hours after the posted date and time of a pre-bid or pre-proposal conference, whichever is earlier, or 48 hours after the posting of an amendment, in which to file a written Notice of Protest in order to timely challenge the requirements, terms and/or conditions contained in bid or proposal documents, including without limitation any provisions governing or establishing: (i) the basis for making the award in question; (ii) evaluation criteria; (iii) equipment, product, or material specifications; (iv) proposed project schedules; (v) statements regarding

participation goals or other equal opportunity measures; or (vi) other general solicitation or project requirements.

- a Protestant shall have 48 hours after either the posting or written notification of a decision or intended decision, whichever is earlier, in which to file a written Notice of Protest in order to timely challenge or seek relief from a recommended conclusion to any bid or proposal solicitation process, including without limitation: (i) a recommendation to reject a bid or proposal; (ii) a contract award; or (iii) the short-listing of bidders or proposers.
- A written Notice of Protest shall: (i) be addressed to the Chief [of Jacksonville's Procurement Division]; (ii) identify the solicitation, decision, or recommended award in question by number and title or any other language sufficient to enable the Chief to identify the same; (iii) state the timeliness of the protest; (iv) state Protestant's legal standing to protest; and (v) clearly state with particularity the issue(s), material fact(s) and legal authority upon which the protest is based.
- At the time of filing a timely Notice of Protest, a Protestant may request an extension of three (3) business days after the date its Notice of Protest is timely received, in which to provide supplemental protest documentation. Failure to do so or to timely submit the supplemental protest documentation shall constitute a waiver of any right to same.
- The timely filing of a Notice of Protest shall be accomplished when said notice is actually received by the Procurement Division within the applicable time limitation or period contained herein. Filing a notice may be accomplished by manual transfer via hand-delivery or mail to the Chief of Procurement Division at 214 North Hogan Street, Suite 899, Jacksonville, Florida 32202, or by electronic transfer via facsimile to (904) 255-8837. The responsibility and burden of proof that its Notice of Protest has been timely and properly received shall rest with the Protestant, regardless as to the method of delivery employed.

Section 3
General Terms and Conditions of Agreement

Contents

3.1 Provision of Services
3.2 Relationship of the Parties
3.3 Buyer's Right to Make Changes
3.4 Service Warranties
3.5 Buyer Will Assist Contractor
3.6 Location Requirements for Services
3.7 Use of Subcontractors; Flow-Down Provisions
3.8 Meetings and Reports
3.9 Ownership of Works
3.10 Intellectual Property
3.11 Software Development Processes and Standards
3.12 Limitation of Warranty for Buyer-Furnished Software
3.13 Loss of Data
3.14 Purchase Orders
3.15 Best Pricing for Comparable Services to Other Government Entities
3.16 Invoicing and Payment
3.17 Taxes
3.18 Right of Setoff
3.19 Retention of Records / Audits
3.20 Indemnification
3.21 Insurance
3.22 Buyer's Right to Suspend Work
3.23 Buyer's Right to Terminate for Convenience
3.24 Buyer's Remedies Upon Contractor Default.
3.25 Contractor Remedies Upon Buyer Default.
3.26 Transition Services
3.27 Force Majeure, Notice of Delay, and No Damages for Delay
3.28 No Waiver
3.29 Qualification of Contractor Employees, Subcontractors, and Agents
3.30 Security Procedures
3.31 Restrictions on the Use or Disclosure of Buyer's Information
3.32 Protection of Contractor's Trade Secrets and Other Confidential Information
3.33 Assignment
3.34 Notice and Approval of Changes in Ownership
3.35 Assignment of Antitrust Claims
3.36 Equal Employment Opportunity
3.37 Other Non-Discrimination Provisions
3.38 Prompt Payment to Subcontractors and Suppliers
3.39 Conflicts of Interest
3.40 Contingent Fees Prohibited
3.41 Truth in Negotiation Certificate
3.42 Compliance with Applicable Laws
3.43 Cooperative Purchasing
3.44 Warranty of Ability to Perform
3.45 Warranty of Authority to Sign Contract
3.46 Governing State Law/Severability/Venue/Waiver of Jury Trial
3.47 Construction

3.1. **Provision of Services.** Contractor shall provide Buyer with all of the services and deliverables described in the RFP, the Response and the resulting Contract (collectively, the "Services"). If any services, functions or responsibilities are not specifically described in the RFP, the Response or the resulting Contract but are necessary for the proper performance and provision of the Services, they shall be deemed to be implied by and included within the scope of the Services to the same extent and in the same manner as if specifically described herein.

3.2. **Relationship of the Parties.** In performance of the Services, Contractor shall be acting in the capacity of an independent contractor and not as an agent, employee, partner, joint venture or associate of Buyer. Contractor shall be solely responsible for the labor, supplies, materials, means, methods, techniques, sequences and procedures utilized to perform the Services in accordance with the Contract.

3.3. **Buyer's Right to Make Changes.** Buyer may unilaterally require, by written order, changes altering, adding to, or deducting from the Services ("Changes"), provided that such Changes are within the general scope of the Contract. Buyer will make an equitable adjustment in the Contract price or delivery date if the Change materially affects the cost or time of performance. Such equitable adjustments require the written consent of Contractor, which shall not be unreasonably withheld. The Parties will cooperate with each other in good faith in discussing the scope and nature of the Change, the availability of Contractor personnel, the expertise and resources to provide such Change, and the time period in which such Change will be implemented.

3.4. **Service Warranties.** Contractor warrants that the Services shall be performed and delivered in a professional, first-class manner in accordance with the Contract and the standards prevailing in the industry. Contractor shall also undertake the following actions without additional consideration during the term of the Contract and for one year thereafter: (i) promptly making necessary revisions or corrections to resolve any errors and omissions on the part of Contractor; and (ii) conferring with Buyer for the purpose of interpreting any of the Services or information furnished. Acceptance of the Services by Buyer shall not relieve Contractor of these responsibilities. The warranties and covenants in this paragraph will extend to all subcontractors as well.

The foregoing warranties and covenants shall not apply (i) with respect to any portions of the Service that have been produced by anyone other than Contractor or its subcontractors; (ii) to any modifications made by anyone other than Contractor or its subcontractors or without Contractor's specific prior written consent; or (iii) to any use of the Service in a manner or for any purpose other than those contemplated in the Contract. **EXCEPT AS EXPRESSLY STATED IN THE CONTRACT, THERE ARE NO WARRANTIES, EXPRESS OR IMPLIED, INCLUDING WITHOUT LIMITATION ANY IMPLIED WARRANTIES REGARDING MERCHANTABILITY OR FITNESS FOR A PARTICULAR PURPOSE. CONTRACTOR'S WARRANTIES EXTEND SOLELY TO BUYER.**

3.5. **Buyer Will Assist Contractor.** At Contractor's request, Buyer will provide reasonable assistance and cooperation to Contractor, including the supply of any data and information necessary for Contractor to provide the Services. Buyer will also designate a Contract Manager who will, on behalf of Buyer, work with Contractor and administer the Contract in accordance with its terms.

3.6. **Location Requirements for Services.** Unless otherwise stated in the RFP or the Response, the majority of the Services shall be performed within Duval County, Florida and no Services will be performed outside of the United States. These restrictions may be modified in writing if Buyer determines, in its sole discretion, that the restrictions impose an undue burden on Contractor's ability to perform the Services as contemplated in the Contract.

3.7. **Use of Subcontractors; Flow-Down Provisions.** Except to the extent the use of subcontractors is disclosed in the Response or consented to in writing by Buyer, Contractor shall not be allowed to subcontract or assign any of its duties and obligations hereunder. In all cases, Contractor will be responsible for the acts or omissions of its subcontractors. Contractor will ensure that all relevant contractual obligations will flow down to the subcontractors and will be incorporated into the subcontracts (including the obligations relating to insurance, indemnification, delays, intellectual property rights, public records, non-discrimination, audits, security, location of services, termination, transition assistance, warranties, and the manner in which the Services are to be performed).

3.8. **Meetings and Reports.** Contractor must attend all meetings and public hearings relative to the Services where its presence is determined to be necessary and requested by Buyer and Contractor can reasonably schedule its appearance.

Unless otherwise agreed, Contractor shall provide a monthly report summarizing Contractor's performance. Contractor shall provide other periodic reports respecting the Services as Buyer reasonably requests.

3.9. Ownership of Works.

(a) As used in Sections 3.9 and 3.10, the term "Work" shall mean each deliverable, drawing, design, specification, rendering, notebook, tracing, photograph, reference book, equipment, expendable equipment and material, negative, report, finding, recommendation, data and memorandum of every description, shared with or delivered to Buyer pursuant to the Contract.

(b) With the exception of Contractor's pre-existing intellectual capital and third-party intellectual capital as described in Section 3.10 below, Buyer shall own all right, title and interest, including ownership of copyright (limited to the extent permitted by the terms of any governing licenses), in and to each Work including, but not limited to, software, source code, reports, deliverable, or work product developed by Contractor specifically for Buyer in connection with the Contract, and derivative works relating to the foregoing. The use of these Works in any manner by Buyer shall not support any claim by Contractor for additional compensation.

(c) Each Work, and any portion thereof, shall be a "work made for hire" for Buyer pursuant to federal copyright laws. Any software, report, deliverable, or work product as used in connection with the Work, but previously developed by Contractor specifically for other customers of Contractor or for the purpose of providing substantially similar services to other Contractor customers, generally shall not be considered "work made for hire", so long as the foregoing are not first conceived or reduced to practice as part of the Work. To the extent any of the Works are not deemed works made for hire by operation of law, Contractor hereby irrevocably assigns, transfers, and conveys to Buyer, or its designee, without further consideration all of its right, title and interest in such Work, including all rights of patent, copyright, trade secret, trademark or other proprietary rights in such materials. Except as provided in the foregoing sentences, Contractor acknowledges that Buyer shall have the right to obtain and hold in its own name any intellectual property right in and to the Work. Contractor agrees to execute any documents or take any other actions as may reasonably be necessary, or as Buyer may reasonably request, to perfect or evidence Buyer's ownership of the Work.

3.10. Intellectual Property.

(a) Contractor grants to Buyer an irrevocable, perpetual, royalty free and fully paid-up right to use (and such right includes, without limitation, a right to copy, modify and create derivative works from the subject matter of the grant and the right to sublicense all, or any portion of, the foregoing rights to an affiliate or a third party who provides service to Buyer) Contractor's intellectual property (including, without limitation, all trade secrets, patents, copyright and know-how) that is contained or embedded in, required for the use of, that was used in the production of or is required for the reproduction, modification, maintenance, servicing, improvement or continued operation of any applicable unit of Work.

(b) If the Work contains, has embedded in, or requires for the use of, any third party intellectual property, or if the third party intellectual property is required for the reproduction, modification, maintenance, servicing, improvement or continued operation of the Work, Contractor shall secure for Buyer an irrevocable, perpetual, royalty free and fully paid-up right to use all third party intellectual property. Contractor shall secure such right at its expense and prior to incorporating any third party intellectual property (including, without limitation, all trade secrets, patents, copyright and know-how) into any Work, including, without limitation, all drawings or data provided under the Contract, and such right must include, without limitation, a right to copy, modify and create derivative works from the subject matter of the grant of the right and a right to sublicense all or any portion of the foregoing rights to an affiliate or a third party service provider. This subparagraph does not apply to standard office software (e.g., Microsoft Office).

(c) Should Buyer, or any third party obtaining such Work through Buyer, use the Work or any part thereof for any purpose other than that which is specified in the Contract, it shall be at Buyer's and such third party's sole risk.

3.11. Software Development Processes and Standards. To the extent any software is developed, modified, or otherwise procured under the Contract, Contractor will use commercially-accepted software development and documentation processes and standards.

3.12. Limitation of Warranty for Buyer-Furnished Software. In lieu of any other warranty expressed or implied herein, Buyer warrants that any programming aids and software packages supplied for Contractor use as Buyer-furnished property

shall be suitable for their intended use on the system(s) for which designed. In the case of programming aids and software packages acquired by Buyer from a commercial source, such warranty is limited to that set forth in the contractual document covering the product(s). Should Buyer furnish Contractor with any programming aids or software packages that are found not to be suitable for their intended use on the system(s) for which designed, Contractor shall notify Buyer and supply documentation regarding any defects and their effect on progress on the Contract. Buyer will consider equitably adjusting the delivery performance dates or compensation, or both, and any other contractual provision affected by the Buyer-furnished property in accordance with the procedures provided for in Section 3.3 above ("Buyer's Right to Make Changes").

3.13. **Loss of Data.** If any Buyer data or record is lost or corrupted due to the negligence of Contractor or any of its subcontractors or agents, Contractor shall be responsible for correcting and recreating all production, test, acceptance and training files or databases affected which are used in the provision of services, at no additional cost to the Customer in the manner and on the schedule set by Buyer. This remedy shall be in addition to any other remedy Buyer may be entitled to by law or the Contract.

3.14. **Purchase Orders.** If the Contract requires a Service to be ordered by Buyer via purchase order, Contractor shall not deliver or furnish the Service until a Buyer transmits a purchase order. All purchase orders shall bear the Contract or solicitation number, shall be placed by Buyer directly with Contractor, and shall be deemed to incorporate by reference the Contract. Any discrepancy between the Contract terms and the terms stated on the Contractor's order form, confirmation, or acknowledgement shall be resolved in favor of terms most favorable to Buyer.

3.15. **Best Pricing for Comparable Services to Other Government Entities.** Compensation for the Services shall be as set forth in the Contract. During the Contract term, if Contractor offers better pricing to other government entities for substantially the same or a smaller quantity of Services upon the same or similar terms of the Contract ("Better Pricing"), then the price under the Contract shall be immediately reduced to the better price. Buyer may require Contractor to certify on an annual basis that Better Pricing (as defined above) does not exist.

3.16. **Invoicing and Payment.**

(a) Unless otherwise specified in the RFP, payment to Contractor for Services shall be made on a monthly basis for the Services provided by Contractor for the preceding month. Invoices shall contain the Contract number, purchase order number if applicable, and the appropriate vendor identification number. Buyer may require any other information from Contractor that Buyer deems necessary to verify its obligation to pay under the Contract. Payments will be made to Contractor approximately forty-five (45) days after receipt and acceptance of a proper invoice. Buyer does not pay service charges, interest or late fees unless required by law.

(b) To the extent Contractor's fees include reimbursement for travel or travel- related expenses, such travel and travel-related expenses shall be subject to and governed by the provisions and limitations of Chapter 106, Part 7, Jacksonville Ordinance Code.

(c) Buyer's obligations to make payment are contingent upon availability of lawfully appropriated funds for the Services.

3.17. **Taxes.** Buyer is generally exempt from any taxes imposed by the State of Florida or the Federal Government. Exemption certificates will be provided upon request. Contractor shall not include any state, local and federal taxes in any prices quoted to Buyer.

3.18. **Right of Setoff.** Buyer may, in addition to other remedies available at law or equity and upon notice to Contractor, retain such monies from amounts due Contractor as may be necessary to satisfy any claim for damages, penalties, costs and the like asserted in good faith by Buyer (or any other local government entity or authority located in Duval County, Florida) against Contractor.

3.19. **Retention of Records / Audits.**

(a) Contractor must establish and maintain books, records, contracts, sub-contracts, papers, financial records, supporting documents, statistical records and all other documents pertaining to the Contract (collectively, the "Records"), in whatsoever form or format (including electronic storage media) is reasonable, safe and sufficient.

(b) Contractor must retain all Records for a minimum period of three (3) years after the final payment is made under the Contract. If an audit has been initiated and audit findings have not been resolved at the end of the three (3) year period, the Records shall be retained until resolution of the audit findings or any litigation which may be based on the terms of the Contract, at no additional cost to Buyer. Records shall be retained for longer periods when the retention period exceeds the time frames required by law or ordinance.

(c) At all reasonable times for as long as the Records are maintained, Contractor must allow persons duly authorized by Buyer (including Buyer's auditor and inspector general offices), and to have full access to and the right to examine, copy or audit any of the Records, regardless of the form in which kept. Contractor will not charge Buyer for any setup, supervision or space in connection with the examination and audit. Photocopying charges will not exceed the actual and reasonable cost of the copies to Contractor, and Buyer shall be permitted to bring its photocopying equipment if Buyer so desires.

(d) Contractor must comply with and cooperate in any audits or reports requested by Buyer, and must ensure that all related party transactions are disclosed to the auditor.

(e) Contractor must permit Buyer to interview any of Contractor's employees, subcontractors and subcontractor employees to assure Buyer of the satisfactory performance of the terms and conditions of the Contract. Unless the parties agree otherwise or Buyer is willing to pay for the employee's reasonable travel expenses, the interviews will be conducted at the employee's primary place of work. Contractor will not charge Buyer for any employee time unless the interview time for that employee exceeds eight (8) hours in a calendar year.

(f) Following any audit or review, if performance of Contractor is, in the opinion of Buyer, deficient, Buyer will deliver to Contractor a written report of the deficiencies and request for development by Contractor of a corrective action plan. Contractor hereby agrees to prepare and submit, to Buyer, said corrective plan within ten (10) days of receiving Buyer's written report. Thereafter, Contractor must correct all deficiencies in the corrective action plan within a reasonable time after Buyer's receipt of the corrective action plan.

(g) All reports and other information provided by Contractor pursuant to this Section shall be submitted under penalties of perjury, under Section 837.06, Florida Statutes.

(h) Contractor must include the aforementioned audit, inspection, investigation and record-keeping requirements in all subcontracts and Contract assignments.

(i) Contractor agrees to reimburse Buyer for the reasonable costs of investigation incurred by Buyer for audits, inspections and investigations that uncover a material violation of the Contract. Such costs shall include the salaries of investigators, including overtime, travel and lodging expenses, and expert witness and documentary fees. Contractor shall not be responsible for any costs of investigations that do not uncover a material violation of the Contract.

3.20. **Indemnification.** See Attachment G attached hereto.

3.21 **Insurance.** See Attachment H attached hereto.

3.22. **Buyer's Right to Suspend Work.** Buyer may in its sole discretion suspend any or all activities under the Contract by providing a written notice to Contractor at least five (5) days in advance that outlines the particulars of suspension. Within ninety (90) days of providing such notice, or within any longer period agreed to by Contractor, Buyer shall either (1) authorize the resumption of work, at which time activity shall resume, or (2) terminate the Contract in accordance with the applicable termination provisions. Suspension of work shall not entitle Contractor to any additional compensation. The parties will reasonably amend any schedules relating to performance of the Services to reflect the suspension of work hereunder. Contractor shall not be entitled to receive compensation for any work it performs after being excused from providing it hereunder.

3.23. **Buyer's Right to Terminate for Convenience.** Buyer reserves the right to terminate the Contract at any time and for any reason by giving written notice to Contractor. If the Contract is terminated for convenience as provided herein, Buyer will be relieved of all further obligations other than payment for that amount of Services actually performed to the date of termination. Access to any and all work papers will be provided to the Buyer after the termination of the Contract. The parties understand and agree that Contractor shall not have a reciprocal right to terminate the Contract for convenience; it being

understood that Buyer's payment for Services forms the consideration for Contractor not having this right. In the event of Buyer's termination of the Contract, Buyer (in its sole discretion) may also require Contractor to provide the Transition Services as set forth in Section 3.26 below.

3.24. **Buyer's Remedies Upon Contractor Default**. Any one or more of the following events, if not cured within ten (10) calendar days after Contractor's receipt of written notice thereof, shall constitute an "Event of Default" on the part of Contractor: (1) Contractor fails to perform the Services within the time specified in the Contract or any extension, (2) Contractor fails to maintain adequate progress, thus endangering performance of the Contract, (3) Contractor fails to honor any other material term of the Contract, or (4) Contractor fails to abide by any statutory, regulatory, or licensing requirement. Buyer may extend the 10-day cure period in its discretion.

In addition, the following shall constitute an immediate Event of Default with no right cure: (i) Contractor is found to have made a false representation or certification in its Response, or (ii) Contractor has been placed on the list maintained under Section 287.135, Florida Statutes, of companies with activities in Sudan or in Iran Petroleum Energy Sector.

Upon an "Event of Default" on the part of Contractor, Buyer will be entitled to terminate the Contract and pursue such other remedies available at law or equity, including the recovery of any re-procurement costs and delay damages. The rights and remedies available to Buyer under the Contract are distinct, separate and cumulative remedies, and no one of them, whether or not exercised by a party, shall be deemed to be in exclusion of any other.

If, after termination, it is determined that Contractor was not in default, or that the default was excusable, the rights and obligations of the parties shall be the same as if the termination had been issued for the convenience.

3.25. **Contractor Remedies Upon Buyer Default**. Buyer shall be in default if Buyer fails to honor any material term of the Contract, and such failure is not cured within forty-five (45) calendar days after receipt of written notice thereof from Contractor. In the event of Buyer's default, Contractor will be entitled to terminate the Contract and pursue such other remedies available at law or equity as it deems appropriate. **Except as expressly provided elsewhere in the Contract, Contractor will not be entitled to recover any lost profits or consequential damages.** The rights and remedies available to Contractor under the Contract are distinct, separate and cumulative remedies, and no one of them shall be deemed to be in exclusion of any other.

3.26. **Transition Services.** At any time prior to the date the Contract expires or terminates for any reason (the "Termination Date"), Buyer may direct Contractor to provide reasonable transition assistance services ("Transition Assistance"). Contractor shall provide such Transition Assistance until such time as Buyer notifies Contractor that Buyer no longer requires such Transition Assistance, but in no event for more than 180 days following the Termination Date.

Transition Assistance shall mean any services, functions or responsibilities that are ordinarily or customarily provided to a purchaser to ensure that the services provided to that purchaser by a contractor are fully transitioned in a smooth and efficient manner to a new service provider (either Buyer itself or a third party contractor). Transition Assistance includes the development and implementation of a detailed transition plan. To the extent that Transition Assistance will involve third parties hired by Buyer, those third parties shall cooperate with Contractor in its provision of Transition Assistance and sign any reasonable non-disclosure agreements required by Contractor.

Transition Assistance rendered before the Termination Date shall be provided at no additional cost to Buyer. Transition Assistance rendered after the Termination Date shall be provided at the rates negotiated by the parties prior to the rendering of such service, which rates shall not exceed the standard market rates that Contractor charges to government entities for comparable services; provided however, that if Buyer terminates the Contract because of a breach by Contractor, then (i) the Transition Assistance shall be provided at no cost to Buyer, and (ii) Buyer will be entitled to any other remedies available to it under law. Contractor may withhold Transition Assistance after the Termination Date if Buyer does not provide reasonable assurance that the charges for such Transition Assistance will be paid to Contractor in accordance with the invoicing and payment provisions of the Contract.

3.27. **Force Majeure, Notice of Delay, and No Damages for Delay.** Neither party shall be responsible for delays in performance if the delay was beyond that party's control (or the control of its employees, subcontractors or agents). Contractor shall notify Buyer in writing of any such delay or potential delay and describe the cause of the delay either (1) within ten (10) calendar days after the cause that creates or will create the delay first arose, if Contractor could reasonably foresee that a delay could occur as a result, or (2) if delay is not reasonably foreseeable, within five (5) calendar days after

the date Contractor first had reason to believe that a delay could result. Based upon such notice, Buyer will give Contractor a reasonable extension of time to perform; provided, however, that Buyer may elect to terminate the Contract in whole or in part if Buyer determines, in its sole judgment, that such a delay will significantly impair the value of the Contract to Buyer. Providing notice in strict accordance with this paragraph is a condition precedent to such remedy. **THE FOREGOING SHALL CONSTITUTE CONTRACTOR'S SOLE REMEDY OR EXCUSE WITH RESPECT TO DELAY.** No claim for damages, other than for an extension of time, shall be asserted against Buyer. Contractor shall not be entitled to an increase in the Contract price or payment of any kind from Buyer for direct, indirect, consequential, impact or other costs, expenses or damages, including but not limited to costs of acceleration or inefficiency arising because of delay, disruption, interference, or hindrance from any cause whatsoever.

3.28. **No Waiver.** The delay or failure by a party to exercise or enforce any of its rights under the Contract shall not constitute or be deemed a waiver of that party's right thereafter to enforce those rights, nor shall any single or partial exercise of any such right preclude any other or further exercise thereof or the exercise of any other right. Unless otherwise agreed in writing, Buyer's payment for the Services shall not release Contractor of its obligations under the Contract and shall not be deemed a waiver of Buyer's right to insist upon strict performance hereof.

3.29. **Qualification of Contractor Employees, Subcontractors, and Agents.** All Contractor employees, subcontractors and agents performing work under the Contract shall be properly trained and qualified. Upon request, Contractor shall furnish a copy of technical certification or other proof of qualification. All employees, subcontractors and agents performing work under the Contract must comply with all reasonable administrative requirements of Buyer and with all controlling laws and regulations relevant to the services they are providing under the Contract. Buyer may conduct, and Contractor shall cooperate in, a security background check or other assessment of any employee, subcontractor or agent furnished by Contractor. Buyer may refuse access to, or require replacement of, any personnel for reasonable cause.

Contractor shall take all actions necessary to ensure that Contractor's employees, subcontractors and agents are not considered employees of Buyer. Such actions include, but are not limited to, ensuring that Contractor's employees, subcontractors and agents receive payment and any legally mandated insurance (e.g., workers' compensation and unemployment compensation) from an employer other than Buyer.

As a condition to providing services to Buyer, Contractor (and any subcontractor) will enroll and participate in the federal E-Verify Program within thirty days of the effective date of the Contract. Proof of enrollment and participation will be made available to Buyer upon request.

3.30. **Security Procedures.** Contractor and its employees, subcontractors and agents shall comply fully with all generally applicable security procedures of the United States, the State of Florida and Buyer in performance of the Contract. Buyer agrees that any security procedures imposed by Buyer specifically for the Contract will be reasonable and will not impose any unreasonable costs or hardships.

3.31. **Restrictions on the Use or Disclosure of Buyer's Information.** Contractor shall not use, copy or disclose to third parties, except in connection with performing the Services, any information obtained by Contractor or its agents, subcontractors or employees in the course of performing the Services, including, but not limited to, security procedures, business operations information, or commercial proprietary information in the possession of Buyer. At Buyer's request, all information furnished by Buyer will be returned to Buyer upon completion of the Services. Contractor shall not be required to keep confidential any information that has already been made publicly available through no fault of Contractor or that Contractor developed independently without relying on Buyer's information. To ensure confidentiality, Contractor shall take appropriate steps as to its employees, agents, and subcontractors, including the insertion of these restrictions in any subcontract agreement. The warranties of this paragraph shall survive the Contract.

3.32. **Protection of Contractor's Trade Secrets and Other Confidential Information.** All documents received by Buyer in connection with this Agreement are subject to Chapter 119, Florida Statutes (the "Florida Public Records Law"). Any specific information that Contractor claims to be a trade secret or otherwise exempt from the Florida Public Records Law must be clearly identified as such by Contractor on all copies furnished to Buyer. Buyer agrees to notify Contractor of any third-party request to view such information, but it is Contractor's obligation to obtain a court order enjoining disclosure. If Contractor fails to obtain a court order enjoining disclosure within five (5) business days of Contractor's receiving notice of the request, Buyer may release the requested information. Such release shall be deemed for purposes of the Contract to be made with Contractor's consent and will not be deemed to be a violation of law, including but not limited to laws concerning trade secrets, copy right or other intellectual property.

3.33. **Assignment.** Each party binds itself and its respective successors and assigns in all respects to all of the terms, conditions, covenants and provisions of the Contract. Contractor shall not sell, assign or transfer any of its rights (including rights to payment), duties or obligations under the Contract without the prior written consent of Buyer. In the event of any assignment, Contractor shall remain liable for performance of the Contract unless Buyer expressly waives such liability. Buyer may assign the Contract with prior written notice to Contractor of its intent to do so. Nothing herein shall be construed as creating any personal liability on the part of any officer, employee or agent of Buyer.

3.34. **Notice and Approval of Changes in Ownership.** Because the award of the Contract may have been predicated upon Contractor's ownership structure, Contractor agrees that any transfer of a substantial interest in Contractor by any of its owners shall require Buyer's prior written approval, which approval shall not be unreasonably withheld or unreasonably delayed. By execution of the Contract, Contractor represents that it has no knowledge of any intent to transfer a substantial interest in Contractor. A substantial interest shall mean at least 25% of the voting shares in Contractor. This section shall not apply to (i) transfers occurring upon the incapacitation or death of an owner; (ii) transfers associated with an initial public offering on the NYSE or NASDAQ markets; or (iii) transfers to a company whose stock is publicly traded on the NYSE or NASDAQ markets.

3.35. **Assignment of Antitrust Claims.** Contractor and Buyer recognize that in actual economic practice, overcharges resulting from antitrust violations are in fact usually borne by Buyer. Therefore, Contractor hereby assigns to Buyer any and all claims under the antitrust laws of Florida or the United States for overcharges of goods, materials or services purchased in connection with the Contract.

3.36. **Equal Employment Opportunity.** The Equal Opportunity clause in Title 41, Part 60-1.4 of the Code of Federal Regulations (Paragraphs 1 through 7 of President's Executive Order 11246), the provisions of the Equal Opportunity for Individuals with Disabilities Act in 42 U.S.C. Section 12112, the Listing of Employment Openings for Veterans Clause in Title 41, Part 50-260.2 of the Code of Federal Regulations and the Disabled Veterans and Veterans of the Vietnam era Clause in Title 41, Part 60-250.5 of the Code of Federal Regulations, are incorporated herein by reference if and to the extent applicable. If Contractor is exempt from any of the above cited terms, written evidence of such exempt status must be provided to Buyer.

3.37. **Other Non-Discrimination Provisions.** As required by Section 126.404, Jacksonville Ordinance Code, contractor represents that it has adopted and will maintain throughout the term of this contract a policy of nondiscrimination or harassment against any person with regard to race, color, sex (including pregnancy), sexual orientation, gender identity or expression, religion, political affiliation, national origin, disability, age, marital status, veteran status, or any other impermissible factor in recruitment, hiring, compensation, training, placement, promotion, discipline, demotion, transfers, layoff, recall, termination, working conditions and related terms and conditions of employment. Contractor agrees that, on written request, it will permit reasonable access to its records of employment, employment advertisement, application forms and other pertinent data and records, by the Executive Director of the Community Relations Commission, or successor agency or commission, for the purpose of investigation to ascertain compliance with the non-discrimination provisions of the Contract; *provided however*, that Contractor shall not be required to produce, for inspection, records covering periods of time more than one (1) year prior to the effective date of the Contract. Contractor agrees that, if any of the products or Services to be provided pursuant to the Contract are to be provided by a subcontractor, the provisions of this Section shall be incorporated into and become a part of the subcontract.

3.38. **Prompt Payment to Subcontractors and Suppliers.** The following is required by Chapter 126, Part 6, Jacksonville Ordinance Code; provided however, if Contractor does not use JSEB subcontractors, as identified below, this Section 3.38 shall not apply:

(a) *Generally.* When Contractor receives payment from Buyer for labor, services or materials furnished by subcontractors and suppliers hired by Contractor, Contractor shall remit payment due (less proper retainage) to those subcontractors and suppliers within fifteen (15) calendar days after Contractor's receipt of payment from Buyer. Nothing herein shall prohibit Contractor from disputing, pursuant to the terms hereof, all or any portion of a payment alleged to be due to its subcontractors and suppliers. In the event of such dispute, Contractor may dispute the disputed portion of any such payment only after Contractor has provided notice to the Buyer and to the subcontractor or supplier whose payment is in dispute, which notice shall: (i) be in writing; (ii) state the amount in dispute; (iii) specifically describe the actions required to cure the dispute; and (iv) be delivered to Buyer and said subcontractor or supplier within ten (10) calendar days

after Contractor's receipt of payment from Buyer. Contractor shall pay all undisputed amounts due within the time limits imposed by this Section.

(b) *Jacksonville Small and Emerging Business Enterprise and Minority Business Enterprise Participation.* Notwithstanding Chapter 126, Part 6 of the Jacksonville Ordinance Code, Contractor shall pay all contracts awarded with certified Jacksonville Small and Emerging Business Enterprises ("JSEB"), as defined therein, their pro rata share of their earned portion of the progress payments made by Buyer under the Contract within seven (7) business days after Contractor's receipt of payment from Buyer (less proper retainage). The pro-rata share shall be based on all work completed, materials and equipment furnished, or services performed by the certified JSEB at the time of payment. As a condition precedent to progress and final payments to Contractor, Contractor shall provide to Buyer, with its requisition for payment, documentation that sufficiently demonstrates that Contractor has made proper payments to its certified JSEB's from all prior payments Contractor has received from Buyer. Contractor shall not unreasonably withhold payments to certified JSEB's if such payments have been made to Contractor. If Contractor withholds payment to its certified JSEB's, which payment has been made by Buyer to Contractor, Contractor shall return said payment to Buyer. Contractor shall provide notice to Buyer and to the certified JSEB's whose payment is in dispute, which notice shall: (i) be in writing; (ii) state the amount in dispute; (iii) specifically describe the actions required to cure the dispute; and (iv) be delivered to Buyer and said JSEB's within five (5) calendar days after Contractor's receipt of payment from Buyer. Contractor shall pay all undisputed amounts due within the time limits imposed in this Section. The failure to pay undisputed amounts to the JSEB's within seven (7) business days shall be a breach of the Contract, compensable by one per-cent (1%) of the outstanding invoice being withheld by Buyer, not as a penalty, but as liquidated damages to compensate for the additional contract administration by Buyer.

(c) *Third Party Liability.* The Prompt Payment requirements hereunder shall in no way create any contractual relationship or obligation between Buyer and any subcontractor, supplier, JSEB or any third party or create any Buyer liability for Contractor's failure to make timely payments hereunder. However, Contractor's failure to comply with the Prompt Payment requirements shall constitute a material breach of Contractor's contractual obligations to Buyer. As a result of said breach, Buyer, without waiving any other available remedy it may have against Contractor, may: (i) issue joint checks; and (ii) charge Contractor a 0.2% daily late payment charge or the charges specified in said Chapter 126 of the Jacksonville Ordinance Code for JSEB's and in Chapter 218, Florida Statutes, for non-JSEB's, whichever is greater.

3.39. **Conflicts of Interest**. Contractor acknowledges that Section 126.110 of the Jacksonville Ordinance Code requires that a public official who has a financial interest in a bid or contract make a disclosure at the time that the bid or contract is submitted or at the time that the public official acquires a financial interest in the bid or contract, including but not limited to the public official's name, public office or position held, bid or proposal number, and the position or relationship of the public official with the bidder or contractor.

3.40. **Contingent Fees Prohibited.** Contractor warrants that it has not employed or retained any company or person, other than a bona fide employee working solely for Contractor, to solicit or secure the Contract and that it has not paid or agreed to pay any person, company, corporation, individual or firm, other than a bona- fide employee working solely for Contractor, any fee, commission, percentage, gift or any other consideration, contingent upon or resulting from the award or making of the Contract. For the breach or violation of these provisions, Buyer shall have the right to terminate the Contract without liability and, at its discretion, to deduct from the contract price, or otherwise recover, the full amount of such fee, commission, percentage, gift or consideration.

3.41. **Truth in Negotiation Certificate**. The execution of the Contract by Contractor shall be deemed to be a simultaneous execution of a Truth-In-Negotiation Certificate, whereby Contractor states that the wage rates and other factual unit costs supporting the compensation hereunder are accurate, complete and current at the time of contracting. Further Contractor agrees that the compensation hereunder shall be adjusted to exclude any significant sums where Buyer determines the contract price was increased due to inaccurate, incomplete or non-current wage rates and other factual unit costs, provided that any and all such adjustments shall be made within one (1) year following the completion date of the Contract.

3.42. **Compliance with Applicable Laws.** Contractor (and any subcontractors) must comply with all applicable federal, state and local laws, rules and regulations as the same exist and as may be amended from time to time, including, but not limited to:

- Chapter 119, Florida Statutes (the Florida Public Records Law);

- Section 286.011, Florida Statutes (the Florida Sunshine Law);
- Chapter 602, Jacksonville Ordinance Code (the Jacksonville Ethics Code);
- Chapter 126, Jacksonville Ordinance Code (the Jacksonville Purchasing Code); and
- All licensing and certification requirements applicable to performing the Services.

3.43. **Cooperative Purchasing.** Pursuant to their own governing laws, and subject to the agreement of Contractor, other entities may be permitted to make purchases at the terms and conditions contained herein. These purchases are independent of the agreement between Buyer and Contractor, and Buyer shall not be a party to such transactions.

3.44. **Warranty of Ability to Perform.** Contractor warrants that (i) it is ready, willing and able to perform its obligations under the Contract, and (ii) to the best of Contractor's knowledge, there are no pending or threatened actions, proceedings, investigations or any other legal or financial conditions that would in any way prohibit, restrain, or diminish Contractor's ability to satisfy its Contract obligations. Contractor shall immediately notify Buyer in writing if its ability to perform is compromised in any manner during the term of the Contract.

3.45. **Warranty of Authority to Sign Contract.** Each person signing the Contract warrants that he or she is duly authorized to do so and to bind the respective party to the Contract.

3.46. **Governing State Law/Severability/Venue/Waiver of Jury Trial.** The rights, obligations and remedies of the parties as specified under the Contract shall be interpreted and governed in all aspects by the laws of the State of Florida. Should any provision of the Contract be determined by the courts to be illegal, unenforceable or in conflict with any applicable law, the validity of the remaining provisions shall not be impaired. Venue for litigation of the Contract shall be exclusively in courts of competent jurisdiction located in Jacksonville, Duval County, Florida. The parties waive any and all rights to a jury trial with respect to disputes arising under the Contract.

3.47. **Construction.** Both parties acknowledge that they have had the opportunity to provide meaningful input into the terms and conditions contained in the Contract. Therefore any doubtful or ambiguous provisions contained herein shall not be construed against the party who physically prepared the Contract. Article headings appearing herein are inserted for convenience or reference only and shall in no way be construed to be interpretations of text.

(Remainder of page intentionally left blank)

Section 4

Description of Services and Deliverables

4.1. Background

The Information Technologies Division (ITD) of the City of Jacksonville, Florida is currently accepting bids to obtain source(s) of supply for the item(s) / service(s) as outlined in the bid documents provided. The purpose of this bid invitation is to obtain information about your firm, its ability to provide these items, and to obtain pricing commitments for the purchase of Professional/Technical Services to install new Audio Visual (AV) Equipment System in the new Cecil Field facility with installation of new equipment facilitating the broadcast of customizable content.

4.2. Scope of Services

The services sought under this RFP are generally described as follows: Information Technologies Division (ITD) of the City of Jacksonville, Florida is requesting proposals to install new Audio Visual (AV) Equipment System in the new Cecil Field facility with installation of new equipment that facilitates the broadcast of customizable content. See Section 4.3, **Statement of Work (SOW) Requirements.**

1. Contractor must provide a separate project plan and statement of work (SOW) with associated timelines for each item in **Statement of Work (SOW) Requirements**. The complete project must be ready for final testing by a date that shall be mutually agreed upon after award, vendor must be on-site at **[Time] [AM OR PM]** EST to monitor systems during the live facility activity.
2. Contractor must provide a document showing Project Manager contact information for the duration of the project.
3. A documented Solution Warranty of 12 months will be activated on Go-Live date.
4. Evidence to be provided by the contractor that the Audio and Video systems and applications will be supported for a minimum of 5 years.
5. 911 BACKUP FACILITY CALL CENTER will be in-service 24 hours a day starting June 2019. Non-customer impacting work can be performed and completed prior to in-service date. Customer impacting work will need to be scheduled and approved as per our Jacksonville Information Technologies Division (ITD) - Change Management process while facility rooms are not in use.

4.3. Statement of Work (SOW)-Requirements.

Contractor shall provide all labor (inclusive of project management fees), materials, equipment, software, hardware, hardware installation, custom plenum cable, custom connectors, custom installation hardware, custom programming, tools of trade, supervision and transportation as per statement of work, plans and drawings.

Call Center Room:

Vendor shall install part of the AV system equipment in Call Center Room (room 109). The AV system shall have ten (10) 86-inch commercial display monitors. The system shall be able to be controlled via two (2) Touch-Screens (15.6-inch display) in the Call Center room, located at the JSO and JFRD command stations, to control display output to the Call Center Room commercial displays. The Call Center Room Touch-Screens shall be able to control and be able to receive/display video. The AV system shall be able to receive input from ten (10) computer generated signal, two (2) Wi-Fi connected devices and four cable tuners (not part of RFP) to be managed via the Touch-Screens located in the Call Center Room.

Multipurpose Room:

Vendor shall install part of the AV system equipment in Multipurpose Room (room 112). The AV system shall have two (2) 86-inch commercial display monitors and a commercial projector (HD DLP 3500 Lumen)/fabric-display. The audio system shall have four (4) ceiling mounted speakers that receive its input from three (3) inputs, Projector and the two (2) display monitors. The system shall be able to be controlled via one (1) Touch-Screen (7-inch display) located in the Multipurpose Room.

Break Room:

Vendor shall install part of the AV system equipment in Break Room (room 111). The AV system shall have one (1) 55-inch commercial display that will receive input from one (1) cable tuners (not part of RFP).

Server Room:
Vendor shall install SERVER ROOM equipment in City Of Jacksonville provided equipment racks located in the SERVER ROOM, room number 104, 5847 AVIATION AVENUE, JACKSONVILLE, FLORIDA, 32221.

Bid Requirements:

a) Non-network rack equipment shall be installed by vendor in existing/provided **SERVER ROOM ITD RACK SR2-CABINET 6.**
b) Network rack equipment (network switches) shall be installed by vendor in existing/provided **SERVER ROOM ITD RACK NR1-RACK 3.**
c) **Use the following table provided part numbers as a reference to equivalent COJ approved vendor equipment:**

Part Number	Description	Qty	Notes/Location
Projector/Display and Accessories:			
C861Q	NEC 86" Ultra High Definition Commercial Display	**12**	10 - Call Center 2 - Multipurpose Room
XTM1U	Chief X-Large Fusion Micro-Adjustable Tilt Wall Mount	**12**	10 - Call Center 2 - Multipurpose Room
55F1600	Hisense 55" Class Full HD Commercial TV	**1**	Break Room
MTM1U	Chief Medium Fusion Micro-Adjustable Tilt Wall Mount	**1**	Break Room
FCA800	Chief Fusion 8" Above/Below Shelf for Large Displays	**1**	Break Room
PX747-4K	ViewSonic 4K Ultra HD DLP 3500 Lumen Projector	**1**	Multipurpose Room (North Wall)
SYS474UW	Chief Suspended Ceiling Projector System w/ Storage - White	**1**	Multipurpose Room (North Wall)
21796LSI	DaLite Tensioned Advantage Electrol - 58" x 104" (119" diag) HD Progressive 1.1 Fabric with Projector Interface	**1**	Multipurpose Room (North Wall)
Video:			
M720Q	LENOVO	**11**	10 – SERVER ROOM RACK (SR2-CABINET 6) 1 – Multi Purpose Room
R9861520NA	Barcos CSE-200 Wireless Presenter, incl CS-200 Base, Tray, 2 Buttons	**3**	2 – SERVER ROOM RACK (SR2-CABINET 6) 1 – Multipurpose Room
DM-NVX-350	Crestron DigitalMedia 4K60 4:4:4 HDR Network AV Encoder/Decoder	**13**	10 – Call Center (BEHIND TV) 3 – Multipurpose Room * *BEHIND TV/wall boxes (Call Center) and Projector; POE powered
DM-NVX-350C	Crestron DigitalMedia 4K60 4:4:4 HDR Network AV Encoder/Decoder Card	**2**	SERVER ROOM RACK (SR2-CABINET 6) DMF-CI-8-1 (1) DMF-CI-8-2 (1) 2 – Touch-Screens Call Center Room
DMF-CI-8	Crestron DigitalMedia Card Chassis for DM-NVX-C & DMCF, 8 Slots	**4**	SERVER ROOM RACK (SR2-CABINET 6)
DM-NVX-E30	DigitalMedia 4K60 4:4:4 HDR Network AV Encoder	**2**	Multipurpose Room* 1– PC 1 – Barco * POE powered
DM-NVX-E30C	DigitalMedia 4K60 4:4:4 HDR Network AV Encoder Card	**26**	SERVER ROOM RACK (SR2-CABINET 6) DMF-CI-8-1 (6) DMF-CI-8-2 (6) DMF-CI-8-3 (6) DMF-CI-8-4 (8) 10 – PCs 4 – Tuners 2 – Barcos 10 – Multiwindow Processors

Part Number	Description	Qty	Notes/Location
DM-TX-4K-202-C	Crestron 4K DigitalMedia 8G+ Transmitter 202	2	SERVER ROOM RACK (SR2-CABINET 6) 2 - Touch-Screens Call Center Room
HD-WP-4K-401-C	Crestron 4K Multi-Window Video Processor with HDBaseT & HDMI Outputs	2	SERVER ROOM RACK (SR2-CABINET 6)
Audio:			
AMP-HD2SIC64	OWI Three Source, Integratable, 6" Amplified, In Ceiling Speakers - Four Speaker Package	1	Multipurpose Room (ceiling)
Control:			
TSW-760-B-S	Crestron 7" Touch Screen - Black	1	Multipurpose Room
TS-1542-TILT-B-S	Crestron 15.6" HD Touch Screen, Tabletop Tilt, Black	2	Call Center (JSO/JFRD lead desks)
PWE-4803RU	Crestron PoE Injector	1	SERVER ROOM RACK (SR2-CABINET 6) * POE to Multipurpose Room/Touch-Screen
CP3N	Crestron 3-Series Control System	1	SERVER ROOM RACK (SR2-CABINET 6)
DM-XIO-DIR-80	Crestron DigitalMedia XiO Director – Virtual Switching Appliance for 80 Endpoints	1	SERVER ROOM RACK (SR2-CABINET 6)
DM-PSU-ULTRA-MIDSPAN	Crestron DigitalMedia Ultra Midspan PoDM++ Injector	2	SERVER ROOM RACK (SR2-CABINET 6) POE to Call Center Room/Touch-Screens
PD-9524G	Microsemi 24-port Managed Gigabit Midspan Power Injector	1	SERVER ROOM RACK (NR1-RACK 3) * *POE to Call Center Room
16701	Extreme X460-G2-24t-10GE4-Base-Unit	1	SERVER ROOM RACK (NR1-RACK 3)
16702	Extreme X460-G2-48t-10GE4-Base-Unit	1	SERVER ROOM RACK (NR1-RACK 3)
16710	Extreme X460-G2 VIM-2q (Module)	2	SERVER ROOM RACK (NR1-RACK 3) 1 – 16701 1 – 16702
10943	Extreme 300W AC PSU FB (Module)	2	SERVER ROOM RACK (NR1-RACK 3) 1 – 16701 1 – 16702
10946	Extreme X460-G2 Fan Module FB (Module)	2	SERVER ROOM RACK (NR1-RACK 3) 1 – 16701 1 – 16702
10311	Extreme QSFP+ passive copper cable, 0.5M	2	SERVER ROOM RACK (NR1-RACK 3) 1 – 16701 1 – 16702

4.4. Delivery

Vendor shall store and stage equipment which shall be delivered to the customer location as the project phases require equipment inventory, delivery and installation on location: 5847 AVIATION AVENUE, JACKSONVILLE, FLORIDA, 32221. Contacts: Information Technologies Division (ITD) Gary Steffens, Enterprise Architect Manager garys@coj.net (w) 904-860-2499, ITD Robert Gray, Infrastructure Manager grayr@coj.net, (w) 904-255-8065, ITD Pieter Jansen Sr. Project Manager pjansen@coj.net (w) 904-255-8099

If applicable, a packing list shall accompany all shipments, which shall indicate, at a minimum, the following; purchase order number, item number and description, date of shipment, quantity ordered and shipped, unit prices, and unit of measure.

Attachment A – Response Format

To maintain comparability and facilitate the evaluation process, Responses shall be organized in the manner set forth below. Tab delineations for each of the five sections would be helpful.

1) **Title Page:** Include RFP Title, RFP Number, Contractor's full name, address, phone number.

2) **Cover Letter:** Include the following:

   - Date of Letter.
   - RFP Title and Number.
   - Contractor's full name, address and phone number.
   - Names of the persons who will be authorized to make representations for the Contractor, their titles, addresses (including email address) and telephone numbers.
   - Contractor's Federal Employer ID Number.
   - Acknowledgement that (i) the Response is based on the terms set forth in the RFP and all amendments thereto posted on Buyer's website as of the date of the Response, and (ii) the Contractor will be responsible for monitoring Buyer's website for subsequent amendments and for either maintaining, amending or withdrawing the Response prior to the Response Due Date based on those subsequent amendments.
   - Signature of Authorized Representative.

3) **Required Forms.** Attach all forms identified in Section 1 or in Attachments C or F, each signed by an authorized representative. Examples of the forms that may be required include:

   - Price Sheet. (Form 1)
   - Conflict of Interest Certificate. (Form 2)
   - Insurance Agent Acknowledgment. (Form 3)
   - Business References. (Form 4)
   - Equal Business Opportunity Program Forms (if required, in Attachment C).
   - Federal Forms (if required, in Exhibit A and B).
   - Proposal Bond (if applicable).

4) **Proof of Minimum Requirements.** Responses will ONLY be accepted from companies meeting the minimum requirements in Section 1.4 of the RFP. Contractor must provide clear documentation on Company letterhead with a maximum of 2 pages of how the minimum requirements will be met.

5) **Statement of Qualifications.** This portion of the Response will be used to provide the information Buyer needs to evaluate how well the Contractor meets the criteria listed in Attachment B – Evaluation Criteria. Failure to provide adequate information on any criterion will result in lower scores and could result in rejection of the Response as non-responsive. Please divide this portion of the Response into subsections that correspond to each of the listed criteria.

Attachment B– Evaluation Criteria

The evaluations shall be based upon the following criteria, and Contractors are requested to provide, as a minimum, the information listed under each criterion. Failure to provide adequate information on any criterion shall result in lower scores and could result in rejection of the proposal as non-responsive. The response to each of the criterion shall be evaluated relative to the other responses received and the contract shall be awarded to the highest scoring, responsive, responsible Contractor for the Evaluation Criteria. Contractors are encouraged to arrange their responses in a format that shall offer ready review and evaluation of each criterion. Please note that **100** points is the maximum total.

MAXIMUM POINTS	EVALUATION CRITERIA
60	Form 1 –LUMP SUM PRICE/PRICE SHEET (lowest price receives a higher score) (The contractor submitting the lowest cost to the City shall receive the maximum number of points for cost, 60 points. Each sub-sequentially higher cost shall be divided into the lowest cost received and the products score % will be multiplied by the maximum points available to render the points.) Score = (Lowest Bid/The Bid) X 60)
10	Installation References - Form 4 (more Public Sector Audio Video integrations receive a higher score)
20	Project Plan, SOW and Timeline to meet the requirements (see Section 1.4, Item 2)
10	Project Resource Resume and Qualifications (see Section 1.4, Item 1c)

Attachment C – Equal Business Opportunity Program Requirements

Encouragement Plan

It is an official policy of the City of Jacksonville to encourage the maximum participation of **Jacksonville Small Emerging Business (JSEB)** in its contract awards based upon availability.

This project has been designated to be under the Equal Business Opportunity Program and has been selected to utilize the following method for achieving JSEB utilization and goals under the Equal Business Opportunity Program: **The Encouragement Plan.**

Under the encouragement plan, vendors are required to make all efforts reasonably necessary to ensure that City certified JSEB have a full and fair opportunity to compete for performance on this project.

Bidders/Suppliers/Consultants or any entity doing business with the City shall not discriminate on the basis of race, ethnicity, national origin or gender in the award and performance of the work under this contract.

Please use the attached form (Schedule of Participation) to submit JSEB Participation on this Bid. You may contact the City's Equal Business Opportunity Office for a copy of the JSEB directory or visit our web site at www.JSEB.coj.net.

(REMAINDER OF THIS PAGE LEFT INTENTIONALLY BLANK)

JSEB FORM 1
CITY OF JACKSONVILLE SMALL & EMERGING BUSINESSES PROGRAM

SCHEDULE OF JSEB SUBCONTRACTOR/SUBCONSULTANT

NAME OF BIDDER _____

PROJECT TITLE _____

BID NUMBER _____TOTAL BASE BID AMOUNT_____

***Please list all JSEBs**

NAME OF SUB FIRM	ADDRESS OF FIRM	TYPE OF SUB (if certified)	TYPE OF WORK TO BE PERFORMED	TOTAL CONTRACT VALUE

The undersigned acknowledges and agrees that, if any of the above-listed JSEBs are not, for any reason, properly certified with the City, in accordance with Ordinance 2004-602, at the time of bid opening, the same will not be counted toward meeting the participation percentage goal as defined herein.

The undersigned will enter into a formal Agreement with the JSEB Suppliers/Consultants/Subcontractors identified herein for work listed in this schedule, as well as any applicable alternates, conditioned upon execution of a contract with the City of Jacksonville. Under penalties of perjury I declare that I have read the foregoing conditions and instructions and the facts are true to the best of my knowledge and beliefs.

Signature: _____ _____Title: _____Date:
(Signature of Prime Contractor)

Print Name: _____

Attach additional list of subcontractors/sub-consultants as needed

JSEB FORM 2
CITY OF JACKSONVILLE SMALL & EMERGING BUSINESSES PROGRAM
LETTER OF INTENT

TO PERFORM AS A SUPPLIER/CONSULTANT/SUBCONTRACTOR and **to be utilized by JSEBs only**

_____

(Name of JSEB Supplier/Consultant/Subcontractor)

NAME OF PROJECT: _____ BID NO _____

I, the undersigned, understand that the price below is representative of my intent to perform the scope of work stated below. I further understand that this price is subject to increase or decrease due to the City of Jacksonville bid requirements. All work must meet the City of Jacksonville bid specifications.

***Scope of Work**	***Total Price of work to be performed or materials to be supplied including Sales Tax**
_____	_____
_____	

_____ _____ _____
Signature of JSEB Supplier/Consultant/Subcontractor Title Date

*Scope of Work and Price are covered under Base Bid only.

Total price must be filled in on this form in order for participation to be considered valid. This form must be used for Letter of Intent.

JSEB FORM 3

CITY OF JACKSONVILLE SMALL & EMERGING BUSINESS PROGRAM

FINANCE & ADMINISTRATION DEPARTMENT CONSULTANT AND CONTRACTOR'S MONTHLY REPORT

PRIME CONTRACTOR NAME: _____ PROJECT TITLE: _____

PROFESSIONAL SERVICES NO. _____ - OR - CITY BID NO.: _____

CURRENT CONTRACT TOTAL AMOUNT $_____ CITY CONTRACT NO. _____

INVOICE INFORMATION

INVOICE NO.: _____ CURRENT INVOICE $: _____

FOR PERIOD ENDING DATE: _____ CUMULATIVE INVOICED $: _____

CONTRACT % COMPLETE:

CONTRACT GOAL TRACKING

JSBE/MBE GOAL $: *PRIOR MONTH* _____ **JSEB/MBE GOAL % :**

CUMULATIVE **JSEB/MBE $**: *PRIOR MONTH* _____

CUMULATIVE **NON-JSEB/MBE $**: _____ *FORMULA FOR CUMULATIVE MONTH %:* **CUMULATIVE $ / CUMULATIVE $ INVOICED**

CUMULATIVE **JSEB/MBE $**: _____ CUMULATIVE **JSEB/MBE %** : _____

CUMULATIVE **NON-JSEB $**: _____ CUMULATIVE **NON-JSEB %** : _____

JSEB/MBE SUBCONTRACTORS TO BE PAID FROM THIS INVOICE

COMPANY NAME	FEDERAL I.D. NO.	ZIP CODE	SDBE TYPE [1]	TYPE OF WORK [2]	$ THIS PAYMENT
Use Sheet 2 if additional lines are needed.				TOTAL	

NON-JSEB SUBCONTRACTORS TO BE PAID FROM THIS INVOICE

COMPANY NAME	FEDERAL I.D. NO.	ZIP CODE		TYPE OF WORK	$ THIS PAYMENT
Use Sheet 3 if additional lines are needed.				TOTAL	

MBE (Minority Business Enterprise)/**JSEB** (Jacksonville Small Emerging Business) **TYPES: AA:** African- American; **WBE:** Woman; **HA**: Hispanic-American; **AS**: Asian-American; **NA**: Native-American; **JSBE:** Jacksonville Small Emerging Business **TYPE OF WORK**: Examples: Catering, Clerical, Consulting, Engineering, Hauling, Janitorial, Masonry, Site Clearing, Technical Support

FOR CITY OF JACKSONVILLE USE ONLY

DATE PROCESSED	DOCUMENT NO.	INDEX CODE – SUBOBJECT - PROJECT NO. – DETAIL	$ THIS PAYMENT

Notes:

1. THIS MONTHLY FORM MUST BE COMPLETED AND SUBMITTED WITH ALL REQUESTS FOR PAYMENT AND FINAL PAYMENT.
2. Contractor shall attach to this form a typewritten explanation of any differences in JSEB/MBE participation from original contract commitment.

JSEB FORM 4
CITY OF JACKSONVILLE SMALL & EMERGING BUSINESS PROGRAM

JSEB GOOD FAITH EFFORT DOCUMENTATION

The intent of this form is to document the good faith effort attempts made by the apparent low bidder in soliciting JSEB firms to meet the JSEB project goal. Please note that the project goal will not be waived and the contractor must make efforts to achieve the goal throughout the life of the contract.

Every work type where there is a certified JSEB, the apparent low bidder must submit the form as follows:
1 available JSEB - must contact 1 JSEB
2-5 available JSEB - must contact 3 JSEBs minimum 6-7
available JSEBs - must contact 4 JSEBs minimum 8-9
available JSEBs - must contact 5 JSEBs minimum
10 or more available JSEBs - must contact 6 JSEBs minimum

All information submitted on this form is subject to audit by the JSEB Office

Date Submitted: _____ Bid Number:_____ Agency:_____

Contractor Name:_____Company Address:_____

City_____ State:_____Zip code:_____Phone:_____

Goal Percentage:_____Commitment Percentage:_____ Unattained Percentage:_____

I certify that the information contained in this good faith effort documentation form is true and correct to the best of my knowledge. I further understand that any willful falsification, fraudulent statement or misrepresentation will result in appropriate sanctions which may involve debarment and/or prosecution under applicable State and Federal laws.

Bidder/Authorized Representative Signature: _____

Representative Title:_____Date:_____

Witness:_____Date: _____

JSEB FORM 4 (Cont.)
CITY OF JACKSONVILLE SMALL & EMERGING BUSINESSES PROGRAM

GOOD FAITH EFFORT DOCUMENTATION

Work Type Number	Description of Work, Service or	JSEB Firm Name		
Contact Name (First and Last)	Contact Date	Contact Method	Contact Results	Bid Amount
1.				
2.				
3.				
Comments:				

Work Type Number	Description of Work, Service or Material	JSEB Firm Name		
Contact Name (First and Last)	Contact Date	Contact Method	Contact Results	Bid Amount
1.				
2.				
3.				
Comments:				

Work Type Number	Description of Work, Service or	JSEB Firm Name		
Contact Name (First and Last)	Contact Date	Contact Method	Contact Results	Bid Amount
1.				
2.				
3.				
Comments:				

JSEB FORM 4 (Cont.)
CITY OF JACKSONVILLE SMALL & EMERGING BUSINESSES PROGRAM

GOOD FAITH EFFORT DOCUMENTATION

GOOD FAITH EFFORTS

Proposers who fail to meet the stated JSEB participation goals set forth in Section "J" are required to submit with their proposal all efforts that would demonstrate a "Good Faith Effort" in the solicitation of subcontractors to meet the JSEB participation goals on this project.

The following categories, without limitations, may be utilized in considering Good Faith Efforts as outlined in Chapter 126, Jacksonville Ordinance code:

(1) A contact log showing the name, address, and contact number (phone or fax) used to contact the proposed certified subcontractors, nature of work requested for quote, date of contact, person making the effort;

(2) The description of work for which a quote was requested;

(3) The amount of the quote given, if one was obtained;

(4) The list of divisions of work not subcontracted and an explanation why not; and

(5) Subcontractor information as requested by forms developed by the Department.

NOTE: The City will investigate and verify information submitted in determining Good Faith Effort, and will compare the same with the performance of other proposers' attempts to meet the participation goals defined herein.

SOLICITATION EFFORTS - should include your efforts to solicit quotes, through all reasonable and available means, the interest of all certified firms who have the capability to perform the work of the contract. The bidder should ensure that the requests are made within sufficient time to allow JSEB firms to respond. The contractor should take the initiative to contact firms which have indicated an interest in participating as a subcontractor/supplier.

ADDITIONAL EFFORTS - Utilizing the services offered by the City of Jacksonville Small and Emerging Business Office for assistance with recruitment efforts. Contractors are encouraged to undertake and document any other efforts taken in their attempt to fulfill the project goal.

Attachment D

SERVICES CONTRACT
BETWEEN
[THE CITY OF JACKSONVILLE]
AND
INSERT CORPORATE NAME OF CONTRACTOR
FOR
INSERT SUMMARY OF SERVICES TO BE PERFORMED

THIS CONTRACT, made and entered into this ___ day of _____, 201__ (the "Effective Date"), by and between the CITY OF JACKSONVILLE (the "CITY"), a municipal corporation existing under the Constitution and the laws of the State of Florida, and _____(the "CONTRACTOR"), a _____corporation authorized to transact business in Florida and with its principal offices at _____.

WHEREAS, the CITY (as the "Buyer") issued a Request for Proposal No. _____ (the "RFP") for certain services described in the RFP (the "Services"); and

WHEREAS, based on CONTRACTOR'S response to the RFP dated _____, consisting of ____ pages (the "Response"), the CITY has awarded this Contract to CONTRACTOR;

NOW THEREFORE, in consideration of the premises and the mutual covenants contained below, the parties agree as follows:

1. Performance of Services. The Services will be performed by CONTRACTOR as specified in the RFP and the Response.

2. Compensation. CONTRACTOR will be paid by the CITY for the Services [as follows: _____] or [as specified on the Price Sheets attached as Form 1].

3. Maximum Indebtedness. As required by Section 106.431, *Ordinance Code*, the CITY's maximum indebtedness, for all products and services under this Contract shall be a fixed monetary amount not-to-exceed _____($_____).

4. Term. The initial term of this Contract shall commence on the Effective Date and shall expire on _____, unless sooner terminated by either party in accordance with the terms of the RFP. This Contract may be renewed for up to _____additional one (1) year periods by (i) the CITY, it its sole discretion, upon written notice to CONTRACTOR at least sixty (60) days prior to end of the then-current term, or (ii) upon the mutual agreement of the parties.

5. Contract Documents. This Contract consists of the following documents which are hereby incorporated as if fully set forth herein and which, in case of conflict, shall have priority in the order listed:

- This document, as modified by any subsequent signed amendments
- Any amendments to the RFP
- Specific Information Regarding The RFP (Section 1 of the RFP)
- Description of Services and Deliverables (Section 4 of the RFP)
- General Instructions to Respondents (Section 2 of the RFP)
- General Contract Conditions (Section 3 of the RFP)
- Any Purchase Order under the Contract
- The Response, provided that any terms in the Response that are prohibited under the RFP shall not be included in this Contract.

6. Notices. All notices under this Agreement shall be in writing and shall be delivered by certified mail, return receipt requested, or by other delivery with receipt to the following:

As to the CITY:

_____
_____
_____

As to the CONTRACTOR:

_____
_____
_____

7. **Contract Managers.** Each Party will designate a Contract Manager during the term of this Contract whose responsibility shall be to oversee the Party's performance of its duties and obligations pursuant to the terms of this Contract. As of the Effective Date, CITY'S Contract Manager is __[Insert Name and Address]__, and the CONTRACTOR'S Contract Manager is __[Insert Name and Address]__. Each Party shall provide prompt written notice to the other Party of any changes to the Party's Contract Manager or his or her contact information; provided, such changes shall not be deemed Contract amendments and may be provided via email.

8. **Entire Agreement.** This Contract constitutes the entire agreement between the parties hereto for the Services to be performed and furnished by the CONTRACTOR. No statement, representation, writing, understanding, agreement, course of action or course of conduct, made by either party or any representative of either party, which is not expressed herein shall be binding. CONTRACTOR may not unilaterally modify the terms of this Contract by affixing additional terms to materials delivered to the CITY (e.g., "shrink wrap" terms accompanying or affixed to a deliverable) or by including such terms on a purchase order or payment document. CONTRACTOR acknowledges that it is entering into this Contract for its own purposes and not for the benefit of any third party.

9. **Amendments.** All changes to, additions to, modifications of, or amendment to this Contract, or any of the terms, provisions and conditions hereof, shall be binding only when in writing and signed by the authorized officer, agent or representative of each of the parties hereto.

10. **Counterparts.** This Contract, and all amendments thereto, may be executed in several counterparts, each of which shall be deemed an original, and all of such counterparts together shall constitute one and the same instrument.

[Remainder of page left blank intentionally. Signature page follows immediately.]

IN WITNESS WHEREOF, the parties have executed this Contract as of the day and year first above written.

ATTEST:

By _____
James R. McCain, Jr.
Corporation Secretary

CITY OF JACKSONVILLE

By _____
Lenny Curry
Mayor

In accordance with the *Ordinance Code*, of the City of Jacksonville, I do hereby certify that there is an unexpended, unencumbered, and un-impounded balance in the appropriation sufficient to cover the foregoing agreement; and that provision has been made for the payment of monies provided therein to be paid.

_____
Director of Finance
CITY Contract Number:_____

Form Approved:

_____
Office of General Counsel

ATTEST:

By_____
Signature

_____
Type/Print Name

_____
Title

INSERT NAME OF CONTRACTOR.

By_____
Signature

_____
Type/Print Name

_____
Title

Attachment E

DISQUALIFIED/PROBATIONARY VENDORS LIST

In accordance with the City's Procurement Code 126.201 (1) (1), the Chief of Procurement and all agencies are advised to cease doing business with disqualified vendors as they appear on this list. However, any existing contracts held by the vendors listed below should be completed.

VENDOR	VENDOR-FEIN #	Date of Disqualification	Eligibility Reinstatement Date
Able Lumber and Supply	593198312	07/18/1997	07/18/1998
*Aquino Construction Company, Inc.	00001424	04/19/2018	04/19/2021
Armored Car Services	593191058	02/10/2000	02/10/2001
*Arnett Contracting, Inc.	223965485	06/04/2010	06/04/2013
*Aztec American Builders, Inc.	00012849	01/10/2018	01/10/2021
** B. Robinson Corporation	00008704	10/24/2018	10/24/2019
**B & H Full Service Cleaning, Inc.	*****3840	11/19/2010	11/19/2011
C & H Construction	593216284	03/07/2002	03/07/2003
Carolina Paper Mill	593579372	10/20/1980	10/20/1981
*Cleft Landscape Mgmt.	590036843	10/26/2000	10/26/2001
Concerned Citizens of Developing the Disable, Inc. d/b/a A.I.C.R.		07/23/1998	07/23/1999
Court Yard Concepts	593198312	05/07/1997	05/07/1998
Creed Company	45357941	03/07/1990	03/07/1991
D&D Site Work, Inc.		10/9/2013	10/9/2016
Elite Public Safety		03/25/2000	03/25/2001
Fire Defense Centers	593035606	06/08/1987	06/08/1988
*First Coast Site Contractors	273995727	10/26/2012	10/26/2013
**Francbeth, Inc.	593658944	7/9/2014	7/9/2015
*GA Janitorial Cleaning Svcs., Inc.	010684614	08/31/2009	08/31/2010
George Patterson & Assoc.	59317759	06/05/1998	06/05/1999
G K Solutions	593541756	09/08/1999	09/08/2000
**J&J Recycling and Demo, LLC	*****1758	4/21/2015	10/21/2015
Kingdom Cleaning	*****6694/*****9588	10/20/2015	10/20/2017
*Process Server Enterprises, LLC	263336079	04/29/2010	04/29/2011
**Ray T. Freiha Construction, Inc.	593615599	06/01/2010	06/01/2012
*The Real Dirt Busters	*****3042	10/26/2012	10/26/2015
**Sheza General Contractors, Inc.	593430930	11/02/2010	11/02/2011
** Synot Roofing & Construction LLC	*****6145	08/28/2018	02/28/2019
Tiger Tale Publication		05/21/1998	05/21/1999
Whittle & Sons		07/25/1980	07/25/1981

***Vendors disqualified/debarred from bidding as Prime and/or Sub Contractors**
****Vendors placed on probation for a period of 6 months or more**

Revised 3/11/19

Attachment F

Indemnification

Vendor shall hold harmless, indemnify, and defend the City of Jacksonville and City's members, officers, officials, employees and agents (collectively the "City Indemnified Parties") from and against, without limitation, any and all claims, suits, actions, losses, damages, injuries, liabilities, fines, penalties, costs and expenses of whatsoever kind or nature, which may be incurred by, charged to or recovered from any of the foregoing City Indemnified Parties for:

1. General Tort Liability, for any negligent act, error or omission, recklessness or intentionally wrongful conduct on the part of the Vendor that causes injury (whether mental or corporeal) to persons (including death) or damage to property, whether arising out of or incidental to the Vendor's performance of the Contract, operations, services or work performed hereunder; and

2. Intellectual Property Liability, arising directly or indirectly out of any allegation that the Services, any product generated by the Services, or any part of the Services as contemplated in this Contract, constitutes an infringement of any copyright, patent, trade secret or any other intellectual property right. If in any suit or proceeding, the Services, or any product generated by the Services, is held to constitute an infringement and its use is permanently enjoined, the Vendor shall, immediately, make every reasonable effort to secure within 60 days, for the City Indemnified Parties a license, authorizing the continued use of the Service or product. If the Vendor fails to secure such a license for the City Indemnified Parties, then the Vendor shall replace the Service or product with a non-infringing Service or product or modify such Service or product in a way satisfactory to Buyer, so that the Service or product is non-infringing.

If a Vendor exercises its rights and obligations under this Contract, the Vendor will (1) provide reasonable notice to the City Indemnified Parties of the applicable claim or liability, and (2) allow City Indemnified Parties, at their own expense, to participate in the litigation of such claim or liability to protect their interests. **The scope and terms of the indemnity obligations herein described are separate and apart from, and shall not be limited by any insurance provided pursuant to the Contract or otherwise. Such terms of indemnity shall survive the expiration or termination of the Contract.**

Attachment G

Insurance Requirements

Without limiting its liability under this Contract, Vendor shall at all times during the term of this Contract procure prior to commencement of work and maintain at its sole expense during the life of this Contract (and Vendor shall require its, subcontractors, laborers, materialmen and suppliers to provide, as applicable), insurance of the types and limits not less than amounts stated below:

Insurance Coverages

Schedule	Limits
Cyber Liability & Data Storage	$1,000,000 per Claim and Aggregate

Such insurance shall be on a form acceptable to the City and shall cover, at a minimum, the following:

- Data Loss and System Damage Liability (when applicable)
- Security Liability
- Privacy Liability
- Privacy/Security Breach Response Coverage, including Notification Expenses

Such Cyber Liability coverage must be provided on an Occurrence Form or, if on a Claims Made Form, the retroactive date must be no later than the first date of this Contract and such claims-made coverage must respond to all claims reported within three years following the period for which coverage is required and which would have been covered had the coverage been on an occurrence basis.

Commercial General Liability	$2,000,000	General Aggregate
	$2,000,000	Products & Comp. Ops. Agg.
	$1,000,000	Personal/Advertising Injury
	$1,000,000	Each Occurrence
	$ 50,000	Fire Damage
	$ 5,000	Medical Expenses

Such insurance shall be no more restrictive than that provided by the most recent version of the standard Commercial General Liability Form (ISO Form CG 00 01) as filed for use in the State of Florida without any restrictive endorsements other than those reasonably required by the City's Office of Insurance and Risk Management. An Excess Liability policy or Umbrella policy can be used to satisfy the above limits.

If Vendor will be performing its services onsite then the Vendor must maintain the additional below coverages:

Deleted: Provider

Deleted: below Provider

Automobile Liability $1,000,000 Combined Single Limit
(Coverage for all automobiles, owned, hired or non-owned used in performance of the Contract)

Such insurance shall be no more restrictive than that provided by the most recent version of the standard Business Auto Coverage Form (ISO Form CA0001) as filed for use in the State of Florida without any restrictive endorsements other than those which are required by the State of Florida, or equivalent manuscript form, must be attached to the policy equivalent endorsement as filed with ISO (i.e., mandatory endorsement).

Worker's Compensation	Florida Statutory Coverage
Employer's Liability	$ 100,000 Each Accident
	$ 500,000 Disease Policy Limit
	$ 100,000 Each Employee/Disease

This insurance shall cover the Vendor (and, to the extent they are not otherwise insured, its subcontractors) for those sources of liability which would be covered by the latest edition of the standard Workers' Compensation policy, as filed for use in the State of Florida by the National Council on Compensation Insurance (NCCI), without any restrictive endorsements other than the Florida Employers Liability Coverage Endorsement (NCCI Form WC

09 03), those which are required by the State of Florida, or any restrictive NCCI endorsements which, under an NCCI filing, must be attached to the policy (i.e., mandatory endorsements). In addition to coverage for the Florida Workers' Compensation Act, where appropriate, coverage is to be included for the Federal Employers' Liability Act, USL&H and Jones, and any other applicable federal or state law.

Additional Insurance Provisions

A. Certificates of Insurance. Vendor shall deliver the City Certificates of Insurance that shows the corresponding **City Contract or Bid Number** in the Description, **Additional Insureds, Waivers of Subrogation** and **Primary & Non-Contributory statement** as provided below. The certificates of insurance shall be mailed to the City of Jacksonville (Attention: Chief of Risk Management), 117 W. Duval Street, Suite 335, Jacksonville, Florida 32202.

B. Additional Insured: All insurance except Worker's Compensation shall be endorsed to name the City of Jacksonville and City's members, officials, officers, employees and agents as Additional Insured. Additional Insured for General Liability shall be in a form no more restrictive than CG2010 and CG2037, Automobile Liability CA2048.

C. Waiver of Subrogation. All required insurance policies shall be endorsed to provide for a waiver of underwriter's rights of subrogation in favor of the City of Jacksonville and its members, officials, officers employees and agents.

D. Vendor's Insurance Primary. The insurance provided by the Vendor shall apply on a primary basis to, and shall not require contribution from, any other insurance or self-insurance maintained by the City or any City members, officials, officers, employees and agents.

E. Deductible or Self-Insured Retention Provisions. All deductibles and self-insured retentions associated with coverages required for compliance with this Contract shall remain the sole and exclusive responsibility of the named insured Vendor. Under no circumstances will the City of Jacksonville and its members, officers, directors, employees, representatives, and agents be responsible for paying any deductible or self-insured retentions related to this Contract.

F. Vendor's Insurance Additional Remedy. Compliance with the insurance requirements of this Contract shall not limit the liability of the Vendor or its Subcontractors, employees or agents to the City or others. Any remedy provided to City or City's members, officials, officers, employees or agents shall be in addition to and not in lieu of any other remedy available under this Contract or otherwise.

G. Waiver/Estoppel. Neither approval by City nor failure to disapprove the insurance furnished by Vendor shall relieve Vendor of Vendor's full responsibility to provide insurance as required under this Contract.

H. Carrier Qualifications. The above insurance shall be written by an insurer holding a current certificate of authority pursuant to chapter 624, Florida State or a company that is declared as an approved Surplus Lines carrier under Chapter 626 Florida Statutes. Such Insurance shall be written by an insurer with an A.M. Best Rating of A- VII or better.

I. Notice. The Vendor shall provide an endorsement issued by the insurer to provide the City thirty (30) days prior written notice of any change in the above insurance coverage limits or cancellation, including expiration or non-renewal. If such endorsement is not provided, the Vendor, as applicable, shall provide said a thirty (30) days written notice of any change in the above coverages or limits, coverage being suspended, voided, cancelled, including expiration or non-renewal.

J. Survival. Anything to the contrary notwithstanding, the liabilities of the Vendor under this Contract shall survive and not be terminated, reduced or otherwise limited by any expiration or termination of insurance coverage.

K. Additional Insurance. Depending upon the nature of any aspect of any project and its accompanying exposures and liabilities, the City may reasonably require additional insurance coverages in amounts

responsive to those liabilities, which may or may not require that the City also be named as an additional insured.

Deleted: <#>Special Provisions: Prior to executing this Agreement, Vendor shall present this Contract and Attachment F & G to its Insurance Agent affirming: 1) That the Agent has personally reviewed the insurance requirements of the Contract Documents, and(2) . That the Agent is capable (has proper market access) to provide the coverages and limits of liability required on behalf of Vendor.¶

Attachment H

Protest Procedures

CITY OF JACKSONVILLE

PROCUREMENT DIVISION

214 N. Hogan Street - 8th floor, Jacksonville, Florida 32202
(904) 255-8800-Ph; (904) 255-8837-Fax; www.coj.net

PROCUREMENT PROTEST PROCEDURES

126.106(e) PROTEST PROCEDURES

126.106(e)(1) Purpose and Scope
126.106(e)(2) Definitions
126.106(e)(3) Timely Notice of Protest
126.106(e)(4) Extension Request / Supplemental Protest Documentation
126.106(e)(5) Delivery
126.106(e)(6) Process
126.106(e)(7) Protest Hearing Rules and Procedures
126.106(e)(8) Independent Agency, Board or Delegated Authority

126.106(e)(1) Purpose and Scope

(a) These protest procedures are promulgated pursuant to § 126.106(e) of the Jacksonville Ordinance Code (the "Code"), which authorizes the Chief of the Procurement Division (the "Chief") to "prepare and publish rules and regulations governing bid protests." In the event a court of competent jurisdiction declares any provision of these Procurement Protest Procedures to be unconstitutional, invalid, or otherwise unenforceable, then all remaining provisions shall be severable, valid and enforceable regardless of the invalidity of any other provision.

(b) In accordance with the procedures contained herein, any person or entity that is adversely affected by a decision or an intended decision concerning a solicitation, solicitation documents, award, or any other process or procedure prescribed in the Code and who has standing to protest said decision or intended decision under Florida law (the "Protestant"), must timely file a written Notice of Protest seeking to challenge the decision or intended decision. The issue(s) raised and the information contained in the Notice of Protest and any supplemental documentation filed in accordance with § 126.106(e)(4), hereof, must clearly identify and explain the factual and legal basis for any relief sought, and shall be the only issue(s) and information the Protestant may present for consideration before the applicable committee.

126.106(e)(2) Definitions

For the purpose of these Bid Protest Procedures, the following definitions are provided:

(a) "Competitive solicitation" or "solicitation" shall include without limitation an invitation to bid, competitive sealed bid, multi-step competitive sealed bid, competitive sealed proposal, or a request for proposals and/or qualifications.

(b) "Posting" means the notification of solicitations, decisions or intended decision, or other matters relating to procurement on a centralized Internet website, by placing the same on the bulletin board(s) designated by the Procurement Division for this purpose, or as may be consistent with § 126.102(m) of the Code.

(c) "Exceptional purchase" means any purchase excepted by law or rule from the requirements for competitive solicitation, including without limitation purchases pursuant to §§ 126.107, 126.206, 126.207, 126.211, 126.307, 126.309, 126.311, 126.312, or 126.313 of the Code.

(d) "Electronic transfer" is limited solely to facsimile transmissions that appear legibly on paper at the place of filing.

(e) "Final Agency Action" means a final decision that results from a proceeding hereunder, and includes actions which are affirmative, negative, injunctive, or declaratory in form.

(f) "Procurement process" has the same meaning as "contract solicitation or award process."

126.106(e)(3) Timely Notice of Protest

(a) Recommendations of Award and/or Bid Rejection. A Protestant shall have 48 hours after either the posting or written notification of a decision or intended decision, whichever is earlier, in which to file a written Notice of Protest in order to timely challenge or seek relief from a Procurement Division recommended award of an exceptional purchase or an award or recommended conclusion to any bid or proposal solicitation process, including without limitation: (i) a recommendation to reject a bid or proposal; (ii) a contract award; or (iii) the short-listing of bidders or proposers.

(b) Bid/Proposal Specifications and/or Requirements. A Protestant shall have 10 business days after the posting of a solicitation or 48 hours after the posted date and time of a pre-bid or pre-proposal conference, whichever is earlier, or 48 hours after the posting of an addendum, in which to file a written Notice of Protest in order to timely challenge the requirements, terms and/or conditions contained in bid or proposal documents, including without limitation any provisions governing or establishing: (i) the basis for making the award in question; (ii) evaluation criteria; (iii) equipment, product, or material specifications; (iv) proposed project schedules; (v) statements regarding participation goals or other equal opportunity measures; or (vi) other general solicitation or project requirements.

(c) Computation of Time - The computation of the time limitations or periods contained herein shall be governed by and shall be pursuant to Florida Rule of Civil Procedure 1.090(a). Failure to file a written Notice of Protest within the applicable time limitation or period shall constitute a waiver of any right, remedy, or relief available hereunder.

(d) Form and Content of the Notice of Protest - A written Notice of Protest shall: (i) be addressed to the Chief; (ii) identify the solicitation, decision, or recommended award in question by number and title or any other language sufficient to enable the Chief to identify the same; (iii) state the timeliness of the protest; (iv) state Protestant's legal standing to protest; and (v) clearly state with particularity the issue(s), material fact(s) and legal authority upon which the protest is based.

126.106(e)(4) Request for Extension to File Supplemental Protest Documentation

At the time of filing a timely Notice of Protest hereunder, a Protestant may request an extension of three (3) business days after the date its Notice of Protest is timely received, in which to provide supplemental protest documentation. Failure to do so or to timely submit the supplemental protest documentation shall constitute a waiver of any right to the same.

126.106(e)(5) Delivery

The timely filing of a Notice of Protest shall be accomplished when said notice is actually received by the Procurement Division within the applicable time limitation or period contained herein. Filing a notice may be accomplished by manual transfer via hand-delivery or mail to the Chief of Procurement at 214 N. Hogan Street, 8th floor, Jacksonville, Florida 32202 or by electronic transfer via facsimile to (904) 255-8837. The responsibility and burden of proof that its Notice of Protest has been timely and properly received shall rest with the Protestant, regardless as to the method of delivery employed.

126.106(e)(6) Process

(a) Upon receipt of a timely filed written Notice of Protest, the Chief or his/her designee shall schedule and provide notice of the time, date and place that the protest will be heard. The protest will be heard before the General Governmental Awards Committee ("GGAC"), the Professional Services Evaluation Committee ("PSEC"), or the Competitive Sealed Proposal Evaluation Committee ("CSPEC"), whichever is applicable. The Chief or his/her designee shall have the discretion to proceed with the solicitation or contract award process in question or to suspend the same pending the resolution of the protest. To the extent the Chief or his/her designee decides to exercise his/her discretion not to suspend the solicitation or contract award process pending the resolution of the protest, the Chief or his/her designee shall set forth in writing the particular facts and/or circumstances upon which his/her decision is based.

(b) Those persons or entities, other than the Protestant, who will be directly affected by the resolution of the protest shall be given notice of the protest hearing, and the Notice of Protest and any supplemental protest

documentation shall be made available to them upon a written request for the same.

(c) When a Notice of Protest is filed pursuant to § 126.106(e)(3)(b), hereof, the Chief or applicable awards committee chairperson shall have the discretion to direct that the solicitation in question not be opened pending the resolution of the protest.

126.106(e)(7) Protest Hearing Rules and Procedures

(a) Hearings hereunder shall be heard before the applicable committee, and shall begin with a general statement of the rules and procedures prescribed herein by a representative of the committee, followed by a general statement of the facts by a representative of the Procurement Division. Representatives of the Protestant, limited solely to its owners, officers, employees and/or legal counsel, will then be required to present its case based solely upon the issue(s) and information contained in the Notice of Protest and any timely submitted supplemental protest documentation. Those persons or entities, other than the Protestant, who have legal standing and will be directly affected by the resolution of the protest will be given an opportunity to be heard and to present information before the committee, which will be followed by a statement and the presentation of information from the Procurement Division and other governmental representatives. The Protestant must establish by the preponderance of the evidence that the protest should be granted based upon the law, facts and information presented. The committee is entitled to ask questions of any party at any time during the hearing.

(b) For hearings hereunder, the formal rules of evidence pursuant to the Florida Evidence Code may be relaxed at the sole discretion of the presiding chairperson of the applicable committee. Hearsay evidence may be admissible and used to supplement or explain other evidence.

(c) Unless otherwise provided by the Code, the burden of proof shall rest with the Protestant. The standard of proof for proceedings hereunder shall be whether a Procurement Division recommendation or the decision or intended decision in question was clearly erroneous, arbitrary or capricious, fraudulent, or otherwise without any basis in fact or law. In any protest proceeding challenging a decision or intended decision to reject all bids, proposals, or replies, the standard of review shall be whether the decision or intended decision is illegal, arbitrary, dishonest, or fraudulent.

(d) A majority vote of the members of the applicable committee shall be required to grant a protest, hereunder; otherwise, the protest shall be denied, and, upon execution by the Mayor or his designee, said vote and/or decision of the applicable awards committee shall be posted and shall represent final agency action.

126.106(e)(8) Independent Agency, Board or Delegated Authority

If a protest is filed and the solicitation is for the benefit of an independent agency, board, or delegated authority that has its own established procurement procedure and does not use the City's procurement process and/or protest procedures, then the person or entity protesting must follow the protest procedures of that independent agency, board, or delegated authority.

CERTIFICATE OF ADOPTION AND IMPLEMENTATION

The preceding Procurement Protest Procedures are hereby adopted this 1st day of October, 2011, by the undersigned Chief of Procurement for immediate implementation, and will remain in full force and effect until such time as they may be formally revised, amended, supplemented, superseded, or abolished.

Procurement Division

Gregory Pease, Chief
City of Jacksonville
214 N. Hogan Street, 8th floor
Jacksonville, Florida 32202
(904) 255-8800 – Phone
(904) 255-8837 – Facsimile
gpease@coj.net

Revision and Effective Date: 03/13/2012

FORM 1

Price Sheet

ITEM NO.	DESCRIPTION	PRICE
01	Contractor to provide all labor, project management fees, materials, equipment, software, hardware, tools of trade, supervision and transportation for the completion of Cecil Field Audio Video System project, as per Statement of Work, plans and drawings, as listed on Section 4.3.	$
	LUMP SUM PRICE	$

FORM 2
CONFLICT OF INTEREST CERTIFICATE

Bidder must execute either Section I or Section II hereunder relative to Section 126.201, *Ordinance Code*, and Section 112.313(12), *Florida Statutes*. Failure to execute either Section may result in rejection of this proposal.

SECTION I

I hereby certify that no official or employee of the City or independent agency requiring the goods or services described in these specifications has a material financial interest in this company.

_____	_____
Signature	Company Name
_____	_____
Name of Official (Type or Print)	Business Address
	_____
	City, State, Zip Code

SECTION II

I hereby certify that the following named City official(s) and employee(s) having material financial interest(s) (in excess of 5%) in this company have filed Conflict of Interest Statements with the Supervisor of Elections, 105 East Monroe Street, Jacksonville, Duval County Florida, prior to bid opening.

Name	Title or Position	Date of Filing
_____	_____	_____
_____	_____	_____

_____	_____
Signature	Company Name
_____	_____
Name of Official (Type or Print)	Business Address
	_____
	City, State, Zip Code

PUBLIC OFFICIAL DISCLOSURE

Section 126.110 of the Purchasing Code requires that a public official who has a financial interest in a bid or contract make a disclosure at the time that the bid or contract is submitted or at the time that the public official acquires a financial interest in the bid or contract. Please provide disclosure, if applicable.

Public Official _____
Position Held: _____
Position or Relationship with Bidder: _____

FORM 3
INSURANCE AGENT ACKNOWLEDGMENT

RFP No. **ESC- [BID NO]**

Bidder must have their insurance agent execute the below statement. Failure to execute this statement may result in rejection of this bid proposal.

As insurance agent for_____,

I have read the Indemnification and Insurance Requirements relating to the above referenced bid and do certify that I can provide evidence of all required coverages, limits and additional provisions as stated in those documents.

_____	_____
Agent's Signature	Insurance Agency Name
_____	_____
Agent's Name (Type or Print)	Agent's License Number (Type or Print)

Deleted: Company

FORM 4
Business/Corporate References

Organization: _____

Contact Name: _____

Address: _____

Phone Number: _____

Email Address: _____

Industry: _____

Date and Scope of Successful Public Sector Audio and Video Installations:

_____

_____

_____

_____

_____

_____

_____

_____

_____

_____

_____

_____

_____

_____

FORM 4 (Continued)

Organization: _____

Contact Name: _____

Address: _____

Phone Number: _____

Email Address: _____

Industry: _____

Date and Scope of Successful Public Sector Audio and Video Installations:

_____

_____

_____

_____

_____

_____

_____

_____

_____

_____

_____

_____

_____

_____

FORM 4 (Continued)

Organization: _____

Contact Name: _____

Address: _____

Phone Number: _____

Email Address: _____

Industry: _____

Date and Scope of Successful Public Sector Audio and Video Installations:

_____

_____

_____

_____

_____

_____

_____

_____

_____

_____

_____

_____

_____

_____

FORM 5
NO BID FORM

UNABLE TO SUBMIT A BID? WE SINCERELY HOPE THIS IS NOT THE CASE.

If your firm cannot submit a bid at this time, please provide the information requested in the space provided below and return it to:

City of Jacksonville
Procurement Division
214 North Hogan St, Ste #105
Jacksonville, Florida 32202

We are unable to submit a bid at this time due to the following reasons:

_____

_____

_____

Name of Firm: _____

Signature & Title: _____

Street: _____

City: _____ State: _____ Zip: _____

PLEASE SUBMIT THIS FORM ONLY; DO NOT SEND BACK THE BID PACKAGE

EXHIBIT A

911 BACKUP FACILITY CALL CENTER - Diagrams

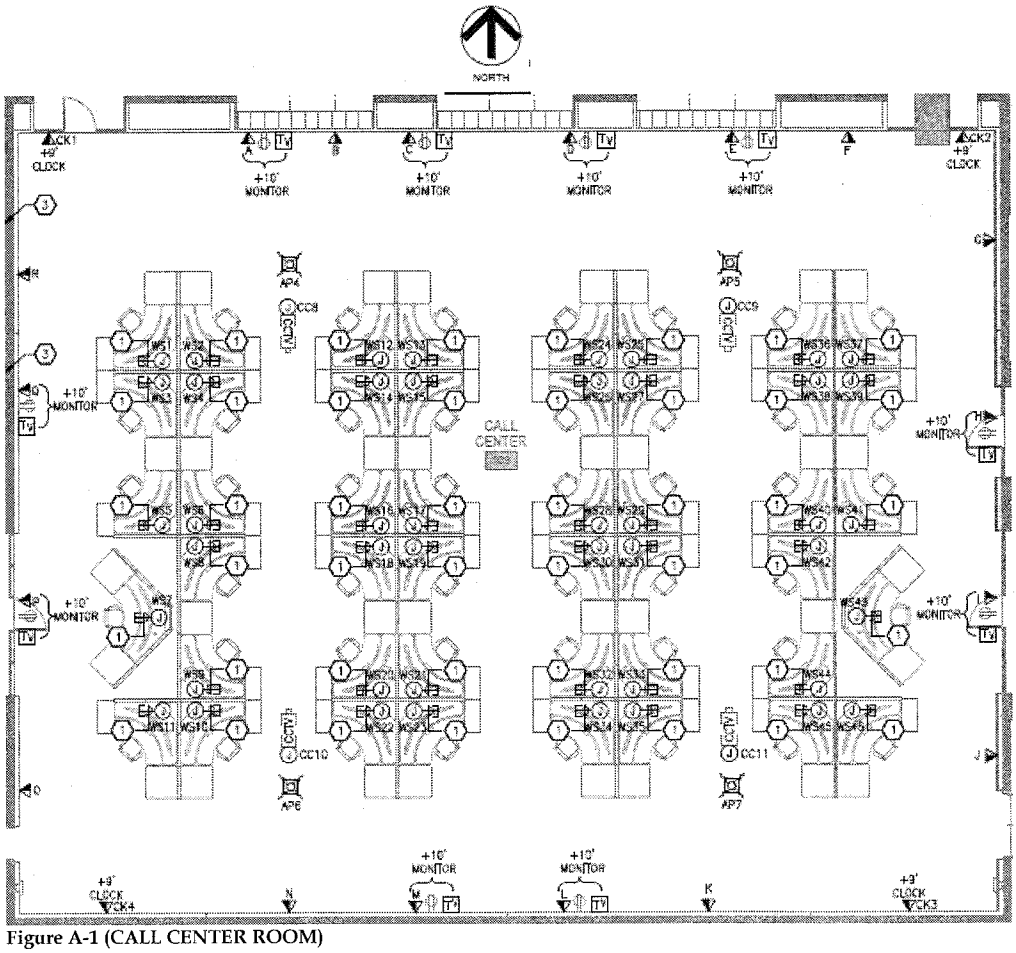

Figure A-1 (CALL CENTER ROOM)

EXHIBIT A (Continued)

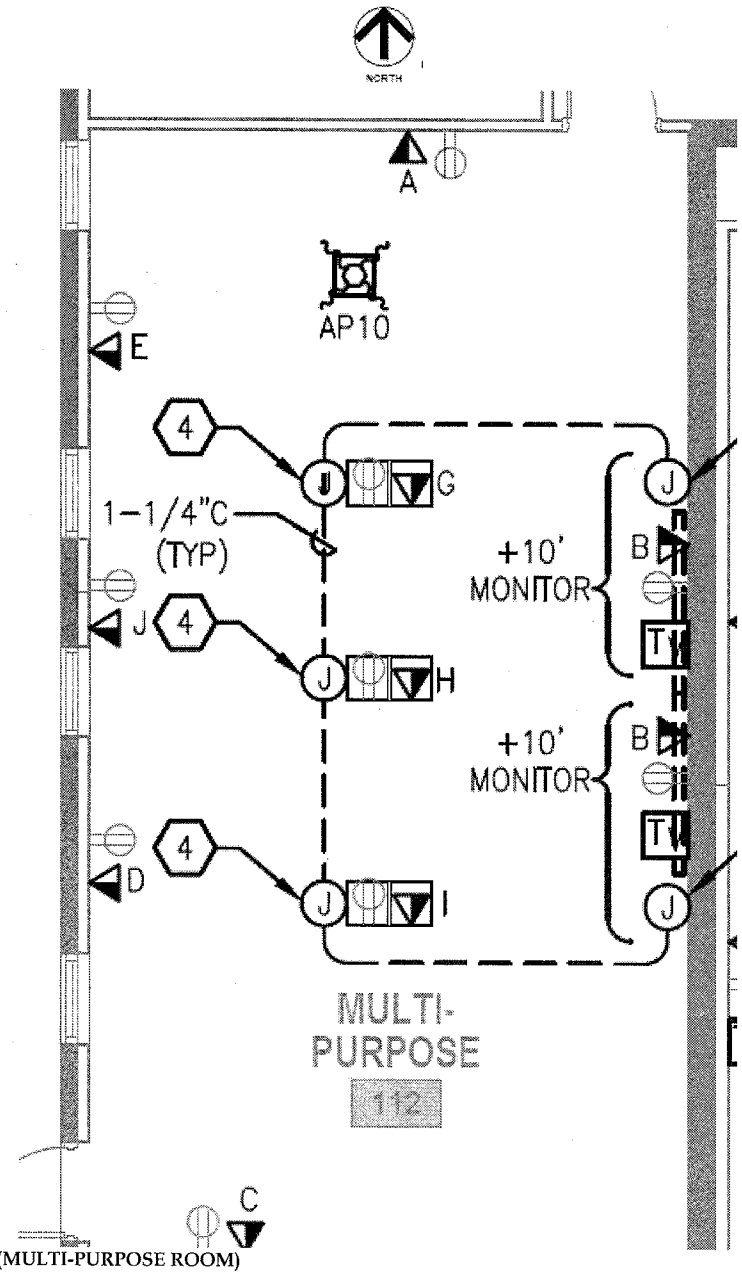

Figure A-2 (MULTI-PURPOSE ROOM)

EXHIBIT A (Continued)

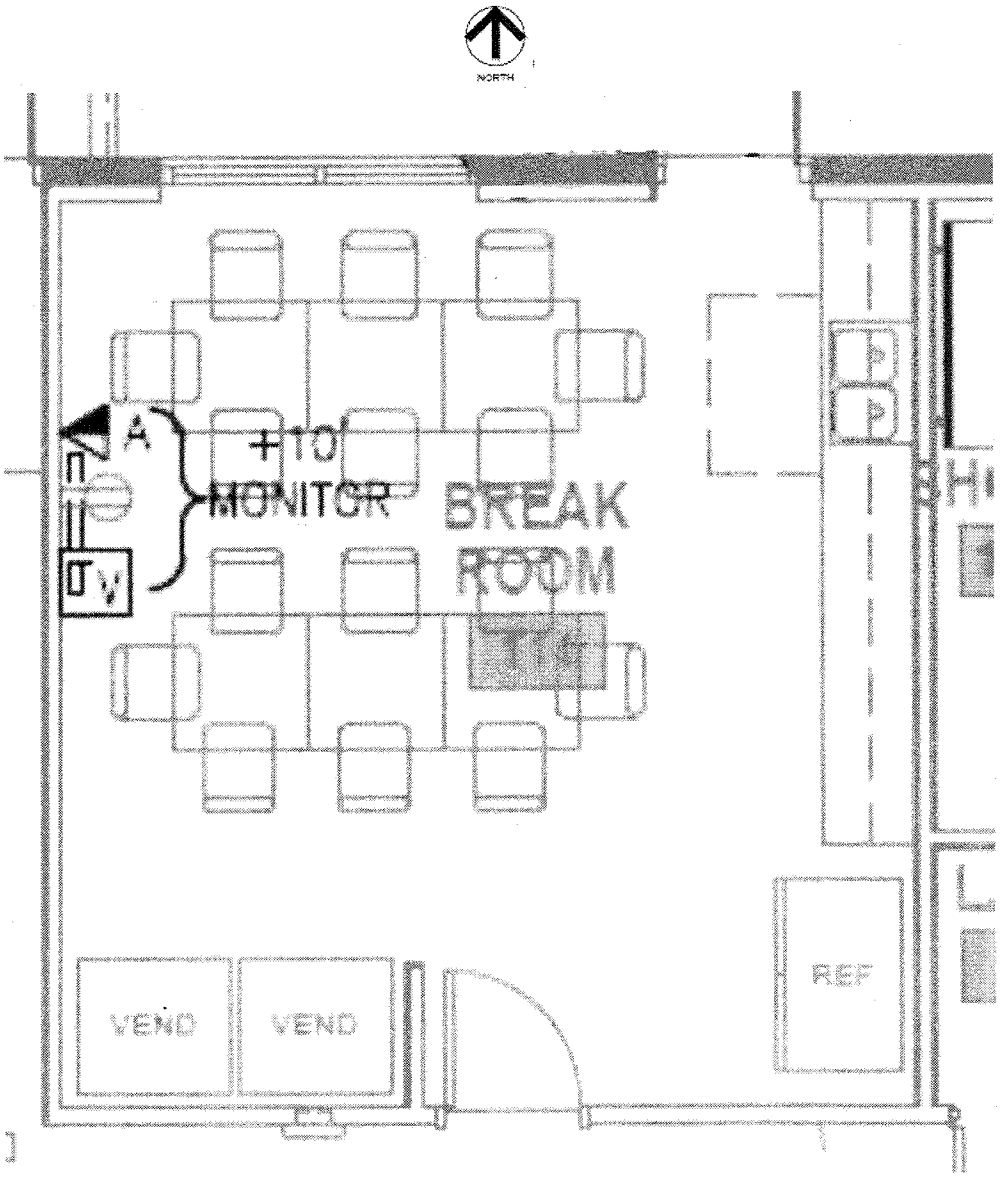

Figure A-3 (BREAK ROOM)

EXHIBIT A (Continued)

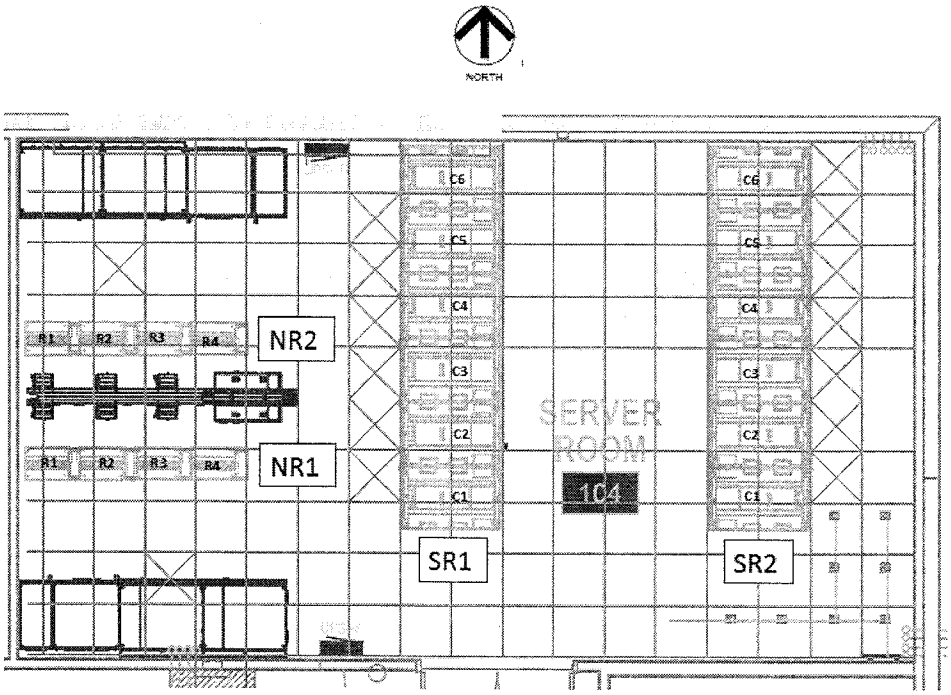

Figure A-4 (SERVER ROOM)