Docusign Envelope ID: EA63A32D-D055-4AFF-B61C-5D90E0BE9C35

City of Jacksonville, Florida
Procurement Award Form (PAF)

Part 1: Form Type JPAC Award Request and Administrative Details

Goods and/or Services: Arlington Road North Improvements CDB-0132-21

Requested Action/Authority:

Recommend approval for Amendment #12D to incorporate the attached Scope of Services and Fee Summary, Exhibit N-4 to decrease the GMP by $872,302.74 from $2,993,441.59 to new GMP amount of $2,121,138.85.

Justification/Explanation:

Amendment #12D is to reconcile final expenses resulting in a net deduction for the unused contingency allowance.

Legal Contract #:	71754-22	Contract Date:	03/23/2023	Change Order/AMD #:	Amendment #12D	
PO/Release #:	655595-23	Bid Date:	08/04/2024	Awarded Supplier:	J.B. Coxwell Contracting, Inc.	
Licenses Verified:	N/A	Effective Date:	08/29/2021	Basis of Award:	Highest Evaluated	
Federally Funded:	N/A	No. Invited:	5	Responses Received:	4	Attachments:
Solicitation:	N/A - CDB-0132 - 21			Procurement Contract #:	POA - 71754-22	
Executed By:	Office of General Counsel					

PoP:Base:	Project Completion	Options:	NA	Extension(s):	N/A
JSEB Rec.:	N/A	%:	N/A	Bonds Waived Pursuant To:	N/A

Fund:	32124	Center:	153104	Acct:	565051	Proj:	010560	Activity:	00000000	$	-872,302.74
Fund:		Center:		Acct:		Proj:		Activity:		$	
Fund:		Center:		Acct:		Proj:		Activity:		$	

New NTE/GMP:	$ 2,121,138.85	Contingent Amount:	$ 0.00	DMP/ODPO Amount:	$ 0.00

Using Agency/BU:	PWEN:ENGINEERING_AND_CONSTRUCTION_MANAGEMENT			
Concurrence:	Signed by: Mcknight, Thomas 10F284DF238E402...	Title:	CAPITAL IMPROVEMENT CONSTRUCTION MANAGER	8/19/2024
Concurrence:	DocuSigned by: Sheldon D. Gibbs, P.E. 843DE27A48A74CA...	Title:	CHIEF OF ENGINEERING CONSTRUCTION MANAGEMENT	8/20/2024
Concurrence:	DocuSigned by: Nina Sicker 1EFA223D5D23487...	Title:	DIRECTOR OF PUBLIC WORKS	8/27/2024
Concurrence:		Title:		

Procurement Analyst/Buyer:	Signed by: Benjamin Kemp 174B3D5CD0EE4C1...	Chief of Procurement:	DocuSigned by: B19F1D517352456... 8/29/2024
Name:	Benjamin Kemp	Name:	Dustin L. Freeman

Part 2: JPAC Actions on Above Requests/Recommendations
All Award Actions Subject to Lawfully Appropriated Funds

Members Who Approve:	
Members Who Disapprove:	
Other Action:	

Date:

Part 3: Final Awarding Authority Action

Action:

Date:

Signature:

Docusign Envelope ID: EA63A32D-D055-4AFF-B61C-5D90E0BE9C35

PAF Instructions

Form Type: Select the type of award from the dropdown options. This form will be used for all Procurement awards (Administrative Awards and JPAC Requests).

Goods and/or Services: Enter a brief description of the types of goods and services included in the request.

Requested Action/Authority: Enter a brief description of the requested action or authority being sought. i.e.; *request permission to award to the lowest, responsive responsible bidder for ITB or award the highest ranked supplier for an RFP*.

Justification/Explanation: Enter a brief justification or explanation for the requested action. Use this box to add any additional information such as additional account strings, or other information essential for contract execution.

Legal Contract Number: Provide the existing City contract number if applicable. This will be the same number as your POA number.

Contract Date: Select the effective date for the contract using the calendar option in the form. Leave blank for contracts to become effective on the execution date.

Change Order/AMD #: Provide the applicable Change Order or Amendment number represented by this request.

Date: Enter the date of PAF submission.

Effective Date: Enter the effective date of requested authority and/or action.

Solicitation: Select the competitive procurement method used (1Cloud generated prefix), enter the 1Cloud generated numbering sequence, and 1Cloud generated fiscal year of solicitation

Basis of Award: Select from Lowest Price Technical Acceptable (LPTA), Highest Price Technical Acceptable (HPTA),

Procurement Contract #: This is your PO number. Select Type, Enter Number

PO/Release Number: Enter PO Release Number

Awarded Supplier: Enter Awarded Supplier Name

Federally Funded: Select yes or no from dropdown if Federal Funds will be used.

Responses Received: This is the number of responses received.

No Bids Received: The number of responses received that indicated supplier would not bid.

Executed By: Select whether executed by OGC or JPAC / Chief of Procurement

PoP Base: Select the Period of Performance for the initial period.

Options: Period for each renewal period i.e. one (1) two (2) year.

Docusign Envelope ID: EA63A32D-D055-4AFF-B61C-5D90E0BE9C35

Extensions: How many extensions have we preformed after the initial base period and option periods have been completed?

JSEB Goal: Select the percentage established by JSEB.

JESB Other: Select Encouragement or Set Aside Option

Bonds Waived Pursuant to: Select authority allowing bonds to be waived.

Funding Source: Fund/Center/Account/Project/Activity, all fields are required even if zeros.

New NTE/GMP: Enter the new total not to exceed the amount. Note, this should match the contract maximum indebtedness, if applicable**.**

Contingent Amount: If your agency requests an allowance for unforeseen additional expenses, then specify the amount of your requested increase and new NTE that represents the contingency allowance. This is over and above any quote.

DMP/ODPO Amount: Enter the total Direct Materials Purchase/Owner Direct Purchase Order amount for project.

Attachments: Name any attachments included as supplemental information to the PAF.

Using Agency/BU: This should be the requesting agency/requirement owner.

Concurrence: Electronic Signature

Title: Enter the title of person electronically signing form.

**Any fields where there is no data available, or no entry is required, either leave it blank or enter N/A. Any fields where there is known data, include for informational purposes. Any changes to an original award should contain the data that is being changed and any other relevant data required for JPAC review and approval.*

Docusign Envelope ID: EA63A32D-D055-4AFF-B61C-5D90E0BE9C35

EXHIBIT N-4

J.B. Coxwell Contracting, Inc.
6741 Lloyd Road West
Jacksonville, Florida 32254
Office (904) 786-1120 Fax (904) 783-2970

May 15, 2024

Fred Sumter
Construction Project Manager
City of Jacksonville
214 N. Hogan Street, 10th Floor
Jacksonville, Fl 32202
dweinstein@coj.net

RE: Arlington Road North Improvements
Design-Build Construction Delivery for COJ
City Contract No. 71754-22
Amendment 12 – Unused Contingency
Proposed Amendment

Dear Mr. Sumter:

Please view breakdown of additional work associated with Arlington Road North Improvements that will apply to the Contingency. Additionally, unused allowance items are detailed below. A deductive change order via amendment can be provided for ($872,302.74).

Contingency Reconciliation				
Sidewalk Repairs (Southeast Side of Bridge)	1.00	LS	$ 2,612.00	$ 2,612.00
Off Duty Officers (Public Safety)	1.00	LS	$ 3,965.00	$ 3,965.00
MOT Addition (Neighborhood to North)	1.00	LS	$ 1,300.00	$ 1,300.00
Ditch Modifications around Inlets	1.00	LS	$ 8,891.00	$ 8,891.00
Ditch Pavement Modifications (Toe add)	1.00	LS	$ 10,371.13	$ 10,371.13
Additional Lane Closures	1.00	LS	$ 6,000.00	$ 6,000.00
Thermoplastic Paint	1.00	LS	$ 18,700.00	$ 18,700.00
Contractor Contingency Used				**$ 51,839.13**

Available Contingency				
Phase 1	1.00	LS	$ 29,870.57	$ 29,870.57
Phase 2	1.00	LS	$ 78,124.95	$ 78,124.95
Phase 3	1.00	LS	$ 273,646.35	$ 273,646.35
Available Contingency				**$ 381,641.87**
Unused Contingency				**$ 329,802.74**

Docusign Envelope ID: EA63A32D-D055-4AFF-B61C-5D90E0BE9C35

Unused Billing Items (Allowances)				
Cellular Grout (Above 750 cy)	1,550.00	CY	$ 350.00	$ 542,500.00
Unused Billing Items				**$ 542,500.00**
Deductive Change Order Amount (Contingency and Unused Items)				**$ 872,302.74**

During the cellular grouting operation, the amount of grout needed did not exceed the initial 750 cy. The allowance item was based on speculative GPR data and during the actual installation the material was not needed, therefore the monies associated with the allowance item can be returned via deductive change order with the unused contingency.

If you have any questions, please contact me at (904) 495-3903.

Respectfully,
J. B. COXWELL CONTRACTING, INC.

Josh Sowards

Josh Sowards
Director of Design Build Services

Docusign Envelope ID: EA63A32D-D055-4AFF-B61C-5D90E0BE9C35

SUBJECT: RFQ- FOR DESIGN-BUILD SERVICES FOR HORIZONTAL/CIVIL (HORIZONTAL) DESIGN BUILD PROJECTS

BID #: CDB-0132-21 **OPEN DATE: 2021 AUG 04**

COMPETITIVE SEALED PROPOSAL EVALUATION COMMITTEE

KIND AND BASIS OF CONTRACT: CONSTRUCTION- DESIGN/BUILD

AGENCY: PUBLIC WORKS

BASIS OF AWARD: EVALUATION CRITERIA

NUMBER OF BIDS INVITED: 5 **NUMBER RECEIVED: 4** **OTHER: 0**

SUMMARY OF BIDS AND RECOMMENDED ACTIONS:
Recommend approval to amend the award with J.B. Coxwell Contracting, Inc. (contract number 71754-22), to incorporate the attached Scope and Fee Summary, Exhibit N-3, known as Amendment 12C for phase 3 of the Arlington Road North Improvements in the amount of $2,079,737.53. The revised GMP amount is $2,993,441.59. Work to be completed within 120 days from the notice to proceed.

FUNDING SOURCE: 32124.153104.565051.010560.00000000.00000.0000000 - To be executed by formal contract amendment through the Office of General Counsel and encumbered by purchase order.

ATTACHMENTS: Recommendation Memo, Exhibit N-3, Previous Award(s)

ANALYST: Benjamin Kemp **RESPECTFULLY SUBMITTED:** DUSTIN FREEMAN, CHIEF PROCUREMENT DIVISION

CONCURRENCE BY: Robin G. Smith, P.E., Chief, Engineering and Construction Management

---

(ALL AWARD ACTIONS SUBJECT TO LAWFULLY APPROPRIATED FUNDS)
ACTION OF CSPEC COMMITTEE ON RECOMMENDATIONS ABOVE

MEMBERS APPROVING 5 MEMBERS DISAPPROVING 0 DATE: 11/2/2023

OTHER: _____

ACTION OF AWARDING AUTHORITY DATE 11/3/23

APPROVED ✓ DISAPPROVED _____

OTHER _____

SIGNATURE OF AUTHENTICATION Karen Bowling

Karen Bowling
Chief Administrative Officer
For: Mayor Donna Deegan
Under Authority Of:
Executive Order No: 2023-02

Docusign Envelope ID: EA63A32D-D055-4AFF-B61C-5D90E0BE9C35

Docusign Envelope ID: EA63A32D-D055-4AFF-B61C-5D90E0BE9C35

City of Jacksonville, Florida

Donna Deegan, Mayor

Department of Public Works
Engineering & Construction Management Division
214 N. Hogan Street, 10th Floor
Jacksonville, FL 32202
(904) 255-8762
www.coj.net

A NEW DAY.

October 24, 2023

TO: Dustin Freeman
Chief of Procurement

THRU: Nina Sickler, P.E.
Director of Public Works

FROM: Robin G. Smith, P.E.
Chief, Engineering and Construction Management

SUBJECT: Amendment 12C/ PO 655595-23 Contract 71754-22 CDB- 0132-21
J. B. Coxwell Contracting, Inc.
Design Build Services Horizontal/Civil (Horizontal) Arlington Road North Improvements

In accordance with Design/Build CDB-0132-21, Contract No. 71754-22, the Arlington Road North Improvements project was awarded by Amendment 12A in the amount of $256,946.65 to provide the initial installation of temporary traffic control measures and maintenance as depicted in the early works plan set for Arlington Road North of Strawberry Creek Roadway Improvements. Amendment 12B in the amount of $656,757.41 was for Phase 2 of the project for the necessary work prior to grout installation, including maintenance of traffic costs. Amendment 12C is for Phase 3 for grout installation and restoration. Negotiations have resulted in the attached Scope and Fee, Exhibit N-3 for $2,079,737.53, which includes $247,396.36 in contingency and allowing for the completion of the work within 120 days from the notice to proceed. J. B. Coxwell Contracting is committed to meeting the 20% JSEB participation goals established for this contract.

Accordingly, this is to recommend that Amendment 12A to Contract No. 71754-22, executed March 23, 2023, between the City and J. B. Coxwell Contracting, Inc. for Arlington Road North Improvements, be amended to incorporate the attached Scope and Fee Summary, Exhibit N-3 to increase the GMP by $2,079,737.53 to a new GMP amount of $2,993,441.59, known as Amendment 12C.

Funding for this project should be encumbered as follows:

ACCOUNTS:	TOTAL
32124.153104.565051.010560.00.00.00	
010560	
PWCP Public Works Capt'l Proj- Road and Street Fac.	
565051	
1	
32124-384020	$2,079,737.53

RGS/lw

Attachment: Exhibit N-3

cc: Michael Derbaum, P.E., Engineering and Construction Management

Docusign Envelope ID: EA63A32D-D055-4AFF-B61C-5D90E0BE9C35

EXHIBIT N-3

J.B. Coxwell Contracting, Inc.
6741 Lloyd Road West
Jacksonville, Florida 32254
Office (904) 786-1120 Fax (904) 783-2970

August 24, 2023 (Rev. #1)

Michael Derbaum, P. E.
City of Jacksonville Department of Public Works
Engineering & Construction Management Division
214 N. Hogan Street, 10th Floor
Jacksonville, Florida 32202

Re: Fee Proposal for Arlington Road North of Strawberry Creek Roadway Improvements Phase 3 (Grout Installation & Restoration)
Design-Build Construction Delivery for City of Jacksonville
City Contract No. 71754-22

Dear Mr. Derbaum:

J.B. Coxwell Contracting, Inc. (JBCCI) is pleased to submit for your review and consideration the following design-build scope of services and attached lump sum fee proposal for the above referenced project. This proposal includes the necessary work for grout installation and restoration. It is JBCCI's understanding that this is a temporary repair for a complete bridge replacement at a later date. The existing timber pile supported concrete pavement is currently not supported by embankment and this proposal includes the installation of the repair procedure proposed by COJ and STV.

The proposed lump sum amount for Phase 3 of the project is $2,079,737.53, which includes a 15% project contingency. The project contingency is for the Design-Builder's benefit and not for changed field conditions, unknown field conditions or added scope of work. The work related to this project will be completed within one hundred twenty calendar days (120) from notice-to-proceed.

This lump sum amount is inclusive of only those services noted on the attached proposal(s) and which are anticipated at this time. No services or work other than those noted in the proposals are included. In addition, any unknown condition(s) which may surface during design and construction or any other increase in scope of services may result in a request for additional services. No work will proceed however, without first obtaining approval from the City for any additional services.

This proposal assumes that JBCCI will be released for the remainder of the work set forth in the DCP and plans by STV (Phase 3) by October 31st, 2023. If this proposal is not accepted and/or JBCCI is not provided a notice to proceed on or before October 31st, 2023, then this proposal is no longer valid and COJ/JBCCI will need to meet to determine the best path forward for cost, safety & stabilization. The work included in this proposal cannot be accomplished without a full road closure and detour. It is assumed that STV will provide the detour plans for this work to commence.

The work related to this proposal included maintenance of traffic, erosion control maintenance, installation of grout under the pile supported concrete pavement, milling & resurfacing, striping & signage, ditch pavement, fencing, drainage and stabilization in the project limits. If the grout installed exceeds 2,300 cy, a change order will be required for additional compensation at the unit rate of $350.00/cy.

Docusign Envelope ID: EA63A32D-D055-4AFF-B61C-5D90E0BE9C35

JBCCI is very appreciative of the opportunity to provide you with our design-build services. Should you have any questions or need any further information, please do not hesitate to contact us. We are also available to review and discuss this proposal with you and/or others at your convenience.

Regards,
J.B. Coxwell Contracting, Inc.

Josh Sowards

Josh Sowards
Director of Design Build Services

Docusign Envelope ID: EA63A32D-D055-4AFF-B61C-5D90E0BE9C35

EXHIBIT N-3

Date: 08/24/2023 (Rev. #1)
Project: Arlington Road @ Strawberry Creek Pavement Restoration - Grout Install
Design-Build Construction Delivery for City of Jacksonville
Agreement: POA-71754-22

Item	Quantity	U/M	Unit Price	Amount
General Conditions	1.00	LS	$ 43,384.31	$ 43,384.31
Maintenance of Traffic	1.00	LS	$ 90,298.40	$ 90,298.40
CMT Testing	1.00	LS	$ 10,000.00	$ 10,000.00
3.00" Mill & Res Asph (SP-Traf C) (PG 76-22)	2,840.00	SY	$ 41.80	$ 118,712.00
Site Grading	1.00	LS	$ 66,174.06	$ 66,174.06
Ditch Pavement (4.00" Thick) (Conc)	1,620.00	SY	$ 98.18	$ 159,051.60
Sidewalk (04" Thick) Concrete	40.00	SY	$ 169.94	$ 6,797.60
Curb (Separator) W/Delineators	1,364.00	LF	$ 40.25	$ 54,901.00
Type B Chain Link Fence	1,214.00	LF	$ 35.56	$ 43,169.84
Type C Inlet - Modified	6.00	EA	$ 19,466.37	$ 116,798.22
Grassing - Sod	2,000.00	SY	$ 10.81	$ 21,620.00
Striping & Signage	1.00	LS	$ 18,000.00	$ 18,000.00
Cellular Grout Under Bridge (First 750 cy)	1.00	LS	$ 348,327.93	$ 348,327.93
Cellular Grout Under Bridge (Above 750 cy)	1,550.00	CY	$ 350.00	$ 542,500.00
End of Job Cleanup	1.00	LS	$ 9,574.13	$ 9,574.13
Subtotal - New Construction				**$ 1,649,309.09**
Contingency	15%			$ 247,396.36
Bond				$ 37,934.11
JBCCI Markup	7.5%			$ 145,097.97
Arlington Road Repairs Grand Total				**$ 2,079,737.53**

Docusign Envelope ID: EA63A32D-D055-4AFF-B61C-5D90E0BE9C35

EXHIBIT N-3

CITY OF JACKSONVILLE NOTES

GENERAL

UTILITY WORK

WORK WITHIN THE RIGHT-OF-WAY

STORMWATER

FIRE MARSHALL

LANDSCAPE

TRAFFIC ENGINEERING

TRAFFIC SIGNS

PROPOSED ROADWAY PLANS FOR

BRIDGE NO. 720359 REPAIR
ARLINGTON ROAD OVER STRAWBERRY CREEK
DUVAL COUNTY

BEGIN PROJECT
STA. 46+60.00
@ SURVEY ARLINGTON RD.

BEGIN BRIDGE #720359
STA. 48+10.00
@ SURVEY ARLINGTON RD.

END BRIDGE #720359
STA. 48+90.00
@ SURVEY ARLINGTON RD.

END PROJECT
STA. 55+80.00
@ SURVEY ARLINGTON RD.

N

H 1.5

Sheet Index	
1	COVER SHEET
2	SIGNATURE SHEET
3 - 5	TYPICAL SECTIONS
6 - 7	PLANS
8 - 9	SIGNING & PAVEMENT MARKING PLAN
10 - 11	DRAINAGE STRUCTURES
12	DRAINAGE STRUCTURE DETAIL
13	SUMMARY OF VERIFIED UTILITIES

PREPARED FOR

CITY OF JACKSONVILLE
DUVAL COUNTY, FLORIDA

MAYOR: LENNY CURRY
COJ ENGINEERING: ROBIN SMITH, P.E.

214 NORTH HOGAN STREET
JACKSONVILLE, FLORIDA 32202

PLAN APPROVAL

Date _____ (Development Services Division Chief)

Date _____ (Public Works Director)

Plan approval is valid for five years after the initial approval date. Revisions made after the initial approval date do not extend this five-year time frame.

PLAN APPROVAL IS SUBJECT TO THE FOLLOWING NOTES AND CONDITIONS:

GENERAL PROJECT INFORMATION

GENERAL
City Development Number
Concurrency Application Number
Property Appraiser Number (RE #)
Zoning Designation
Zoning Application(s) (if any)

PUD Ordinance Number
PPM# - Community - Panel
Flood Zone (Show in Plans)
Base Flood Elev. (Show in Plans)
Vertical Datum Used for Project — NAVD 88
JEA Availability Number

SUBDIVISION
PID Number
City or Private Inspection
Public or Private Roads
Subdivision ("911") Dist. Produced?

NON-SUBDIVISION
North American Industry Classification System (NAICS)
Impervious Area (Sq. Ft.)

GOVERNING STANDARD PLANS:
FLORIDA DEPARTMENT OF TRANSPORTATION, FY 2021-2022 STANDARD PLANS FOR ROAD AND BRIDGE CONSTRUCTION AND APPLICABLE INTERIM REVISIONS (IRs).
STANDARD PLANS FOR ROAD CONSTRUCTION AND ASSOCIATED IRS ARE AVAILABLE AT THE FOLLOWING WEBSITE: http://fdot.gov/design/standardplans

NOTE:
CURRENT JEA STANDARDS, DRAWINGS, DETAILS, AND MATERIALS ARE APPLICABLE FOR THIS PROJECT AND ARE INCORPORATED BY REFERENCE AND ARE AVAILABLE AT WWW.JEA.COM/ENGINEERING_AND_CONSTRUCTION/WATER_AND_WASTEWATER_STANDARDS/

PROJECT NO. CDN 6256.260

STV 100 YEARS
STV INCORPORATED CA NO. 8
5309 BELLFORT ROAD, SUITE 400
Jacksonville, FL 32256
(904) 730-9777
(904) 730-7766 Fax

COVER SHEET

BRIDGE NO 720359 REPAIR
ARLINTON ROAD OVER STRAWBERRY CREEK

SHEET NUMBER
1

Docusign Envelope ID: EA63A32D-D055-4AFF-B61C-5D90E0BE9C35

EXHIBIT N-3

ROBERT R. VANSICKLE
LICENSE
No 40272
STATE OF FLORIDA
PROFESSIONAL ENGINEER

THIS ITEM HAS BEEN DIGITALLY SIGNED AND SEALED BY

ON THE DATE ADJACENT TO THE SEAL

PRINTED COPIES OF THIS DOCUMENT ARE NOT CONSIDERED SIGNED AND SEALED AND THE SIGNATURE MUST BE VERIFIED ON ANY ELECTRONIC COPIES.

STV INCORPORATED
5200 BELFORT ROAD, SUITE 400
JACKSONVILLE, FL 32256
ROBERT R. VANSICKLE, P.E. NO. 40272

THE ABOVE NAMED PROFESSIONAL ENGINEER SHALL BE RESPONSIBLE FOR THE FOLLOWING SHEETS IN ACCORDANCE WITH RULE 61G15-23.004, F.A.C.

SHEET NO.	SHEET DESCRIPTION
1	KEY SHEET
2	SIGNATURE SHEET
3 - 5	TYPICAL SECTIONS
6 - 7	ROADWAY PLAN
8 - 9	SIGNING & PAVEMENT MARKING PLAN
13	SUMMARY OF VERIFIED UTILITIES

WILLIAM L. STEWART
LICENSE
No 42764
STATE OF FLORIDA
PROFESSIONAL ENGINEER

THIS ITEM HAS BEEN DIGITALLY SIGNED AND SEALED BY

ON THE DATE ADJACENT TO THE SEAL

PRINTED COPIES OF THIS DOCUMENT ARE NOT CONSIDERED SIGNED AND SEALED AND THE SIGNATURE MUST BE VERIFIED ON ANY ELECTRONIC COPIES.

STV INCORPORATED
5200 BELFORT ROAD, SUITE 400
JACKSONVILLE, FL 32256
WILLIAM L. STEWART, P.E. NO. 42764

THE ABOVE NAMED PROFESSIONAL ENGINEER SHALL BE RESPONSIBLE FOR THE FOLLOWING SHEETS IN ACCORDANCE WITH RULE 61G15-23.004, F.A.C.

SHEET NO.	SHEET DESCRIPTION
2	SIGNATURE SHEET
10 - 12	DRAINAGE STRUCTURES
12	DRAINAGE STRUCTURE DETAIL

REVISIONS			
DATE	DESCRIPTION	DATE	DESCRIPTION

ROBERT R. VANSICKLE, P.E
P.E. LICENSE NUMBER 40272
STV INCORPORATED
5200 BELFORT ROAD, SUITE 400
JACKSONVILLE, FL 32256

CITY OF JACKSONVILLE, FLORIDA
DEPARTMENT OF PUBLIC WORKS

ROAD NO.	COUNTY	PROJECT #
ARLINGTON ROAD	DUVAL	

SIGNATURE SHEET

SHEET NO. 2

EXHIBIT N-3

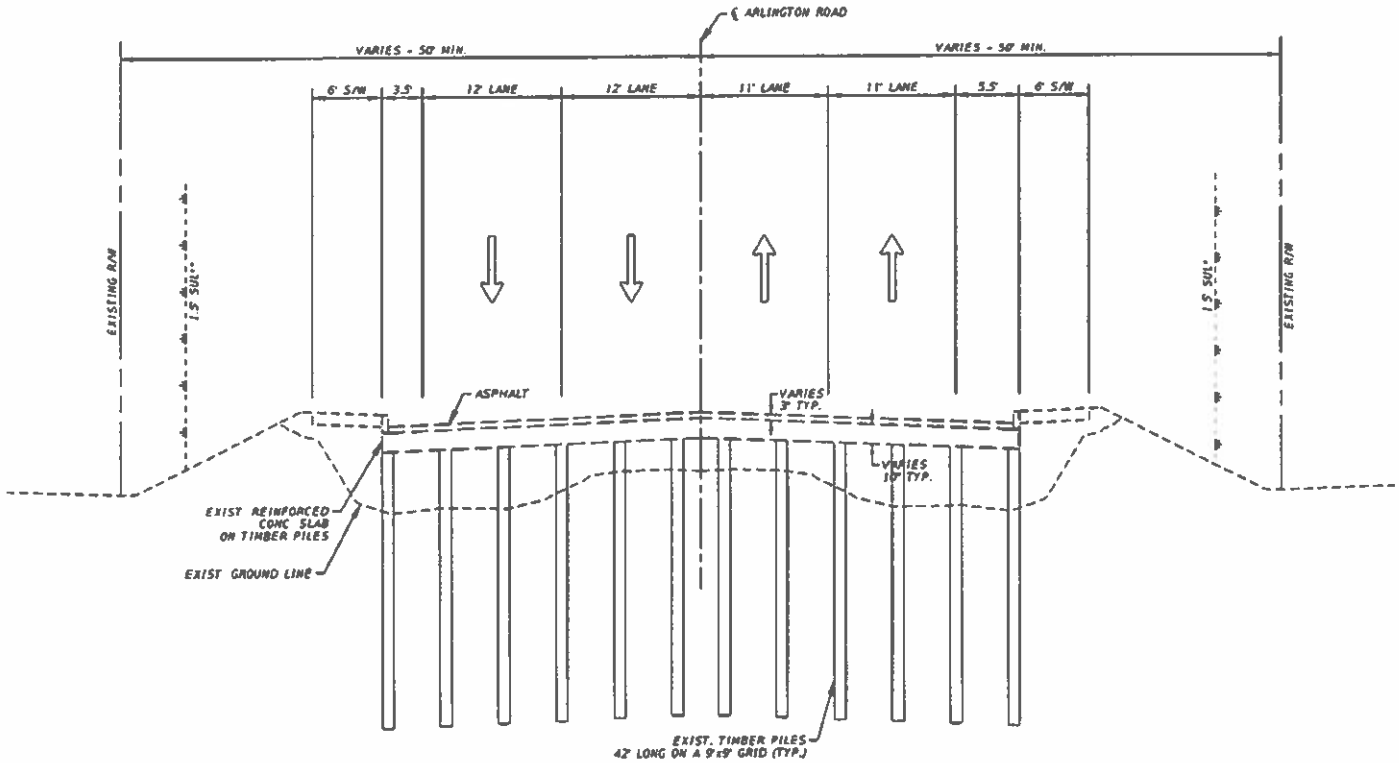

** 1.5' SAFE UPLAND LINE (SUL)
NO WORK WATERWARD OF THIS LINE.
SEE PLAN SHEETS

DESIGN SPEED 40 MPH
POSTED SPEED 40 MPH

EXISTING CONDITIONS

THE OFFICIAL RECORD OF THIS SHEET IS THE ELECTRONIC FILE DIGITALLY SIGNED AND SEALED UNDER RULE 61G15-23.004, F.A.C.

REVISIONS			
DATE	DESCRIPTION	DATE	DESCRIPTION

ROBERT R. VANSICKLE, P.E.
P.E. LICENSE NUMBER 40272
STV INCORPORATED
5200 BELFORT ROAD, SUITE 400
JACKSONVILLE, FL 32256

CITY OF JACKSONVILLE, FLORIDA
DEPARTMENT OF PUBLIC WORKS

ROAD NO.	COUNTY	PROJECT #
ARLINGTON ROAD	DUVAL	

TYPICAL SECTIONS

SHEET NO. 3

Docusign Envelope ID: EA63A32D-D055-4AFF-B61C-5D90E0BE9C35

Docusign Envelope ID: EA63A32D-D055-4AFF-B61C-5D90E0BE9C35

EXHIBIT N-3

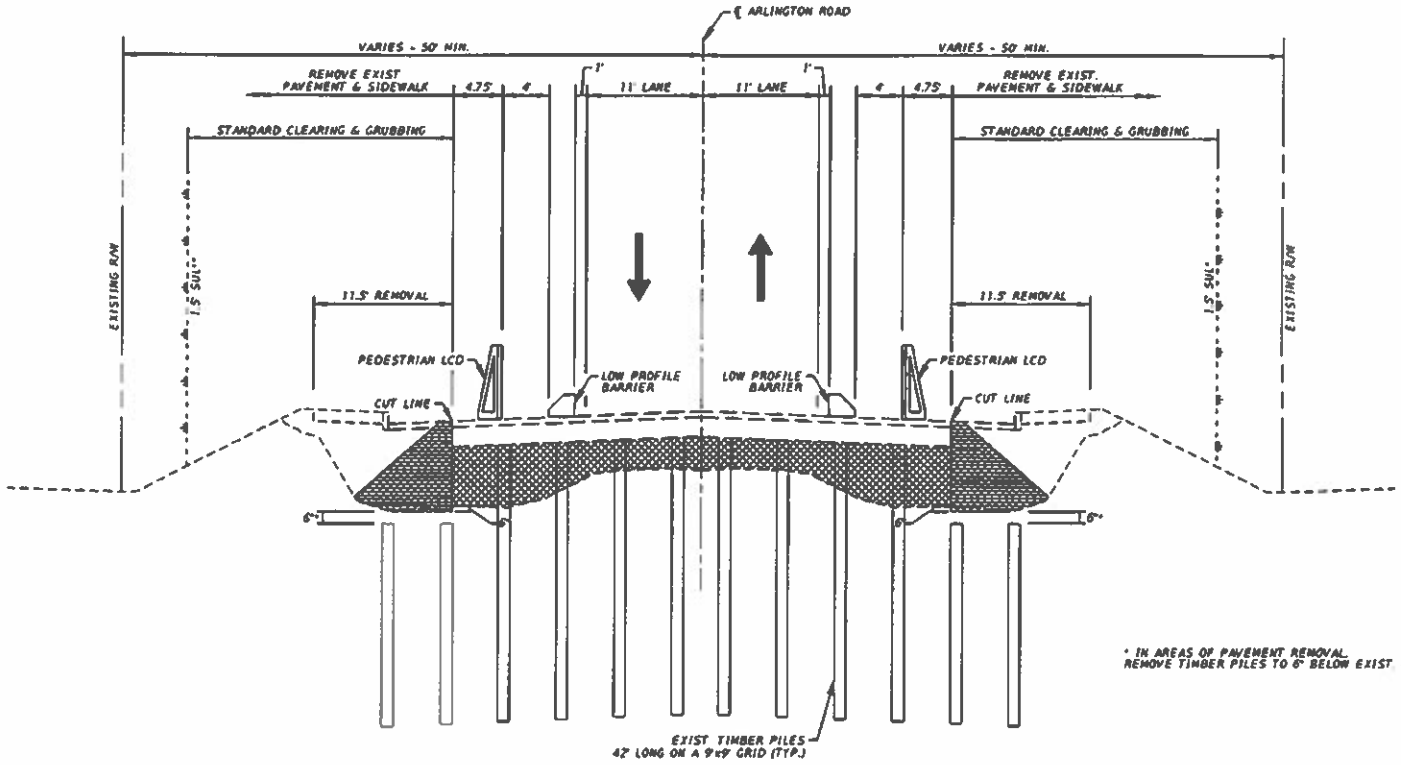

* IN AREAS OF PAVEMENT REMOVAL REMOVE TIMBER PILES TO 6" BELOW EXIST. GROUND LINE

** 1.5' SAFE UPLAND LINE (SUL) NO WORK WATERWARD OF THIS LINE. SEE PLAN SHEETS

REFER TO EARLY WORKS PACKAGE (1/24/23) FOR TTCP DETAILS

TTCP DESIGN SPEED 35 MPH

CORE HOLES IN SLAB AND FILL WITH LOW DENSITY CELLULAR CONCRETE BACKFILL

TEMP. SAND BAG BARRIER (OR APPROVED EQUAL) (BASE WIDTH = 3x HEIGHT)

DURING CONSTRUCTION

THE OFFICIAL RECORD OF THIS SHEET IS THE ELECTRONIC FILE DIGITALLY SIGNED AND SEALED UNDER RULE 61G15-23.004, F.A.C.

REVISIONS			
DATE	DESCRIPTION	DATE	DESCRIPTION

ROBERT R. VANSICKLE, P.E.
P.E. LICENSE NUMBER 40272
STV INCORPORATED
5200 BELFORT ROAD, SUITE 400
JACKSONVILLE, FL 32256

CITY OF JACKSONVILLE, FLORIDA
DEPARTMENT OF PUBLIC WORKS

ROAD NO.	COUNTY	PROJECT #
ARLINGTON ROAD	DUVAL	

TYPICAL SECTIONS

SHEET NO. 4

EXHIBIT N-3

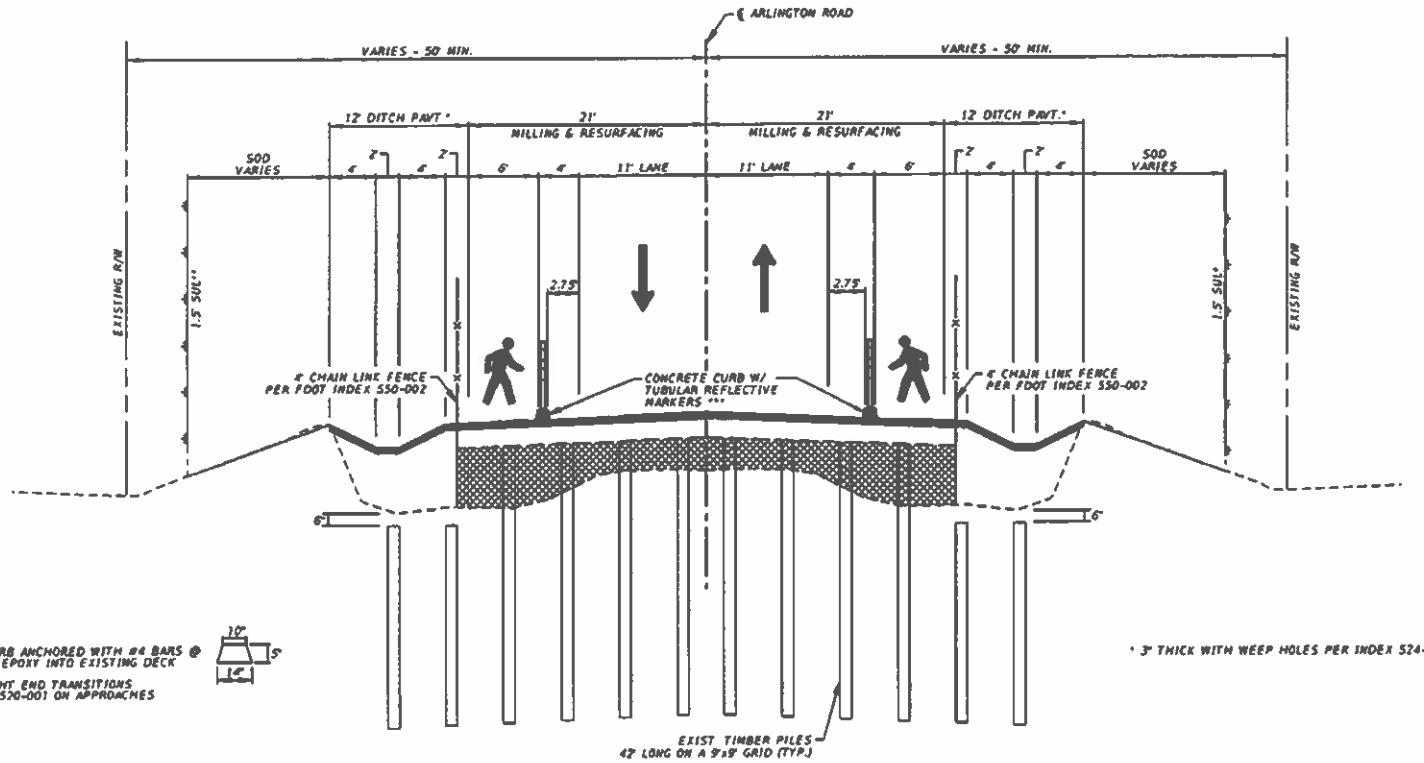

*** CONCRETE CURB ANCHORED WITH #4 BARS @ 4' SPACING, EPOXY INTO EXISTING DECK

USE STRAIGHT END TRANSITIONS PER INDEX 520-001 ON APPROACHES

10" 5" 14"

* 3" THICK WITH WEEP HOLES PER INDEX 524-001

MILL 3" FOR DEPTH
TYPE SP TRAFFIC C (3") PG 76-22

** 1.5' SAFE UPLAND LINE (SUL)
NO WORK WATERWARD OF THIS LINE.
SEE PLAN SHEETS

DESIGN SPEED 40 MPH
POSTED SPEED 40 MPH

CORE HOLES IN SLAB AND FILL WITH LOW DENSITY CELLULAR CONCRETE BACKFILL

FINAL CONDITION

THE OFFICIAL RECORD OF THIS SHEET IS THE ELECTRONIC FILE DIGITALLY SIGNED AND SEALED UNDER RULE 61G15-23.004, F.A.C.

REVISIONS			
DATE	DESCRIPTION	DATE	DESCRIPTION

ROBERT R. VANSICKLE, P.E.
P.E. LICENSE NUMBER 40272
STV INCORPORATED
5200 BELFORT ROAD, SUITE 400
JACKSONVILLE FL 32256

CITY OF JACKSONVILLE FLORIDA
DEPARTMENT OF PUBLIC WORKS

ROAD NO.	COUNTY	PROJECT #
ARLINGTON ROAD	DUVAL	

TYPICAL SECTIONS

SHEET NO. 5

Docusign Envelope ID: EA63A32D-D055-4AFF-B61C-5D90E0BE9C35

Docusign Envelope ID: EA63A32D-D055-4AFF-B61C-5D90E0BE9C35

EXHIBIT N-3

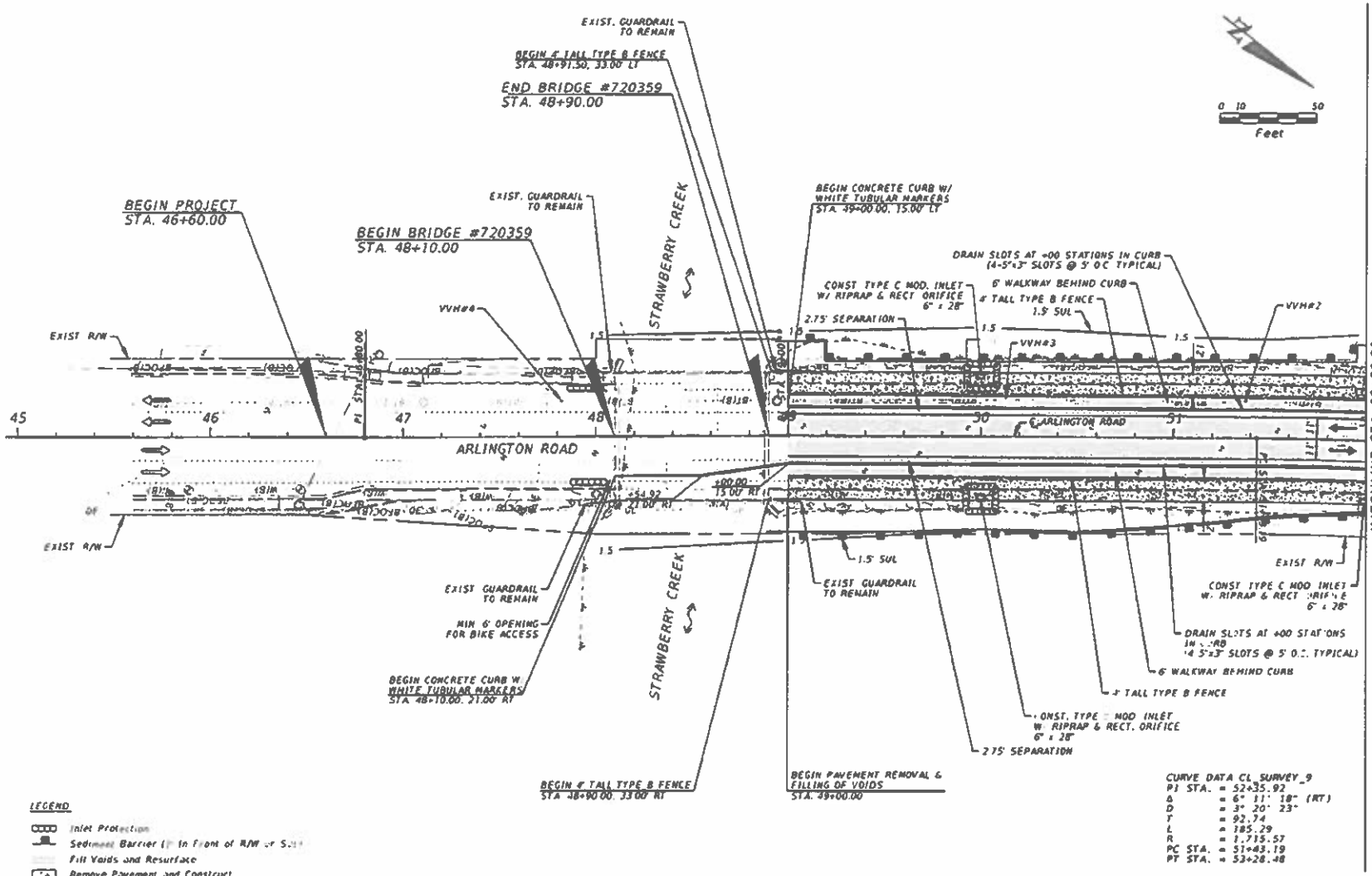

REVISIONS			
DATE	DESCRIPTION	DATE	DESCRIPTION

ROBERT R. VANSICKLE, P.E.
P.E. LICENSE NUMBER 40272
STV INCORPORATED
5200 BELFORT ROAD SUITE 400
JACKSONVILLE FL 32256

CITY OF JACKSONVILLE, FLORIDA
DEPARTMENT OF PUBLIC WORKS

ROAD NO.	COUNTY	PROJECT #
ARLINGTON ROAD	DUVAL	

PLAN

SHEET NO. 6

THE OFFICIAL RECORD OF THIS SHEET IS THE ELECTRONIC FILE DIGITALLY SIGNED AND SEALED UNDER RULE 61G15-23.004 F.A.C.

Docusign Envelope ID: EA63A32D-D055-4AFF-B61C-5D90E0BE9C35

EXHIBIT N-3

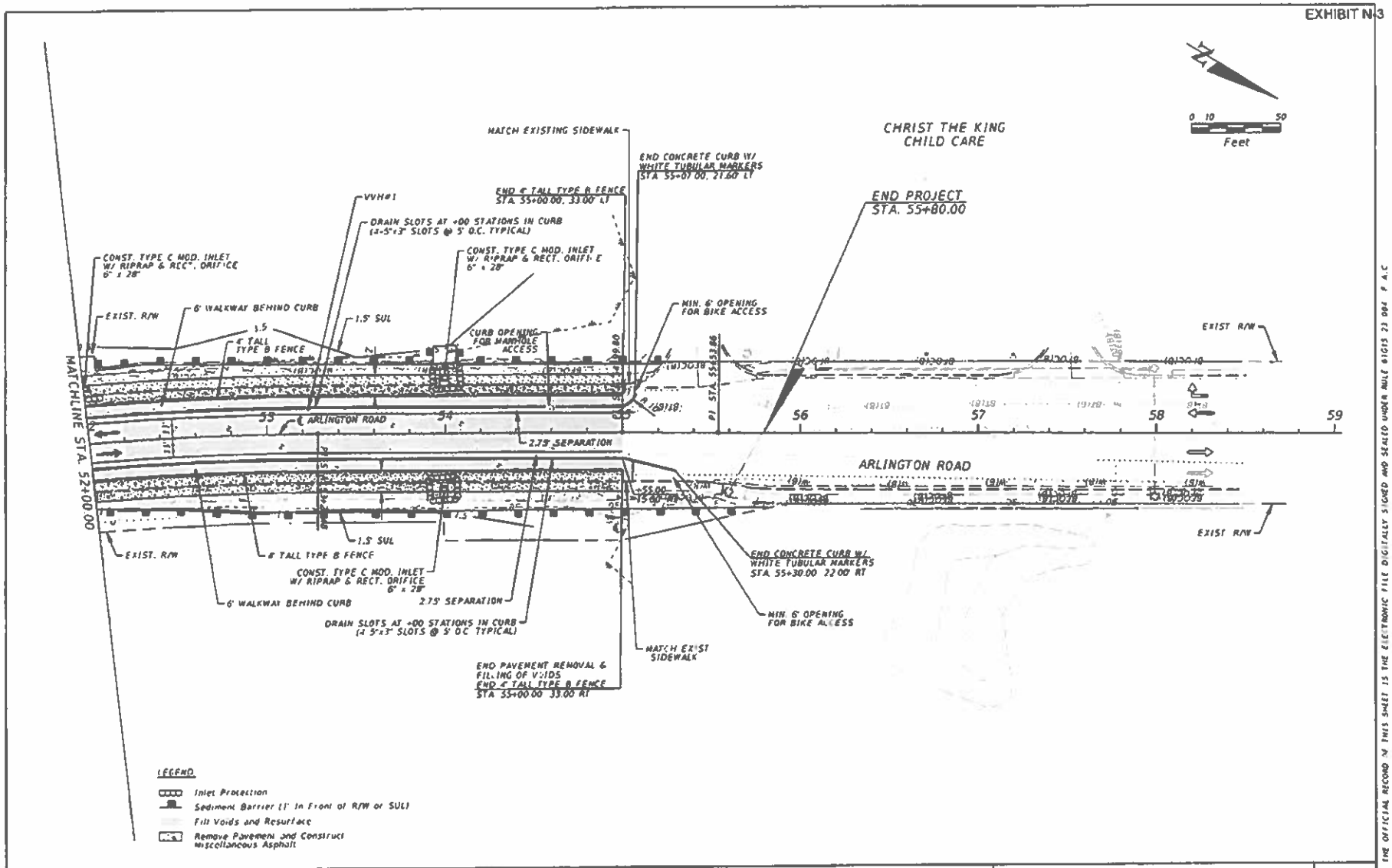

THE OFFICIAL RECORD OF THIS SHEET IS THE ELECTRONIC FILE DIGITALLY SIGNED AND SEALED UNDER RULE 61G15-23.004 F.A.C.

REVISIONS			
DATE	DESCRIPTION	DATE	DESCRIPTION

ROBERT R. VANSICKLE P.E
P.E. LICENSE NUMBER 40272
STV INCORPORATED
5200 BELFORT ROAD, SUITE 400
JACKSONVILLE FL 32256

CITY OF JACKSONVILLE FLORIDA
DEPARTMENT OF PUBLIC WORKS

ROAD NO	COUNTY	PROJECT #
ARLINGTON ROAD	DUVAL	

PLAN

SHEET NO

Docusign Envelope ID: EA63A32D-D055-4AFF-B61C-5D90E0BE9C35

EXHIBIT N-3

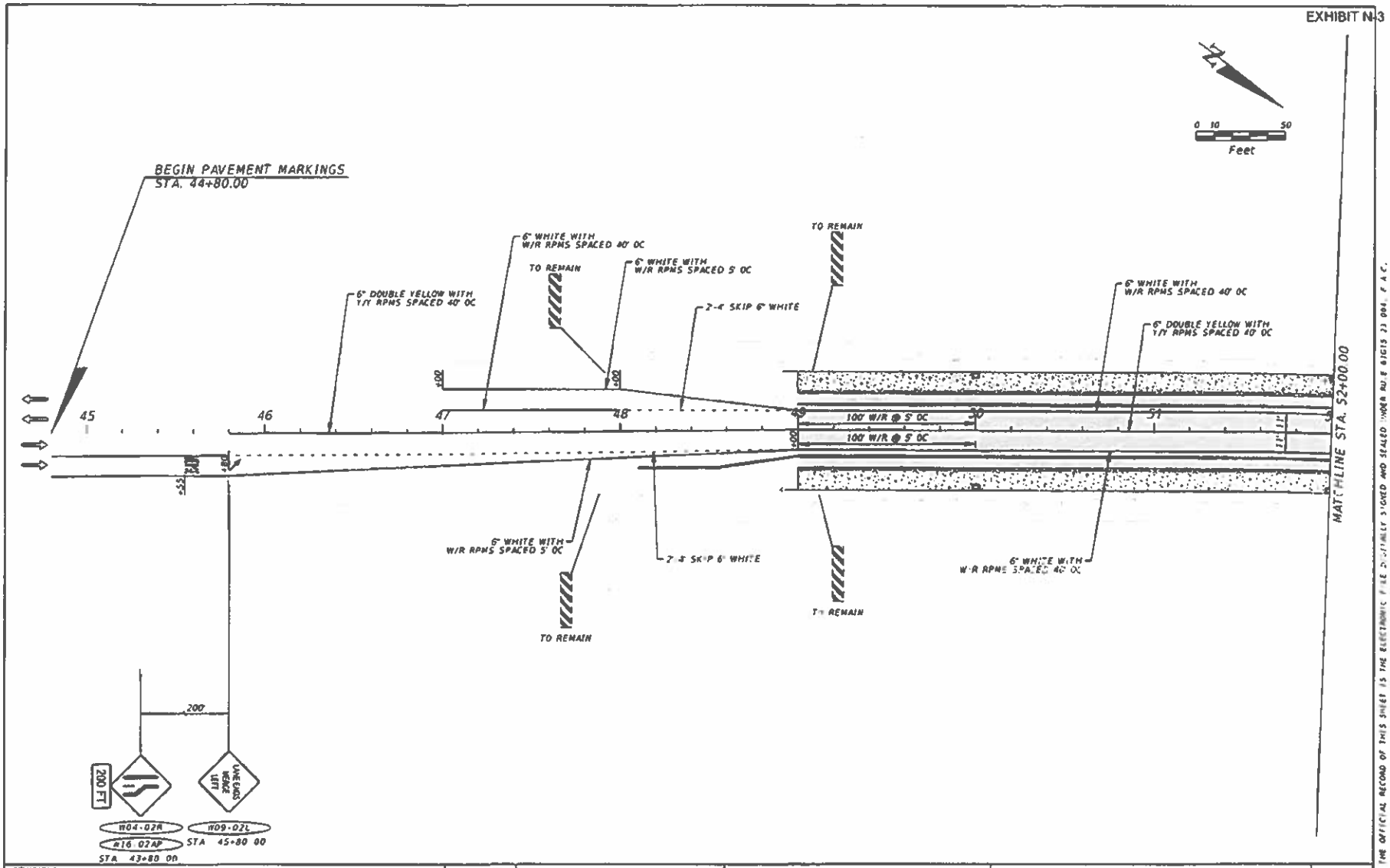

REVISIONS			
DATE	DESCRIPTION	DATE	DESCRIPTION

ROBERT R. VANSICKLE, P.E.
P.E. LICENSE NUMBER 40272
STV INCORPORATED
5200 BELFORT ROAD, SUITE 400
JACKSONVILLE, FL 32256

CITY OF JACKSONVILLE, FLORIDA
DEPARTMENT OF PUBLIC WORKS

ROAD NO	COUNTY	PROJECT #
ARLINGTON ROAD	DUVAL	

SIGNING & PAVEMENT MARKING PLANS

SHEET NO 9

THE OFFICIAL RECORD OF THIS SHEET IS THE ELECTRONIC FILE DIGITALLY SIGNED AND SEALED UNDER RULE 61G15-23.004, F.A.C.

Docusign Envelope ID: EA63A32D-D055-4AFF-B61C-5D90E0BE9C35

EXHIBIT N-3

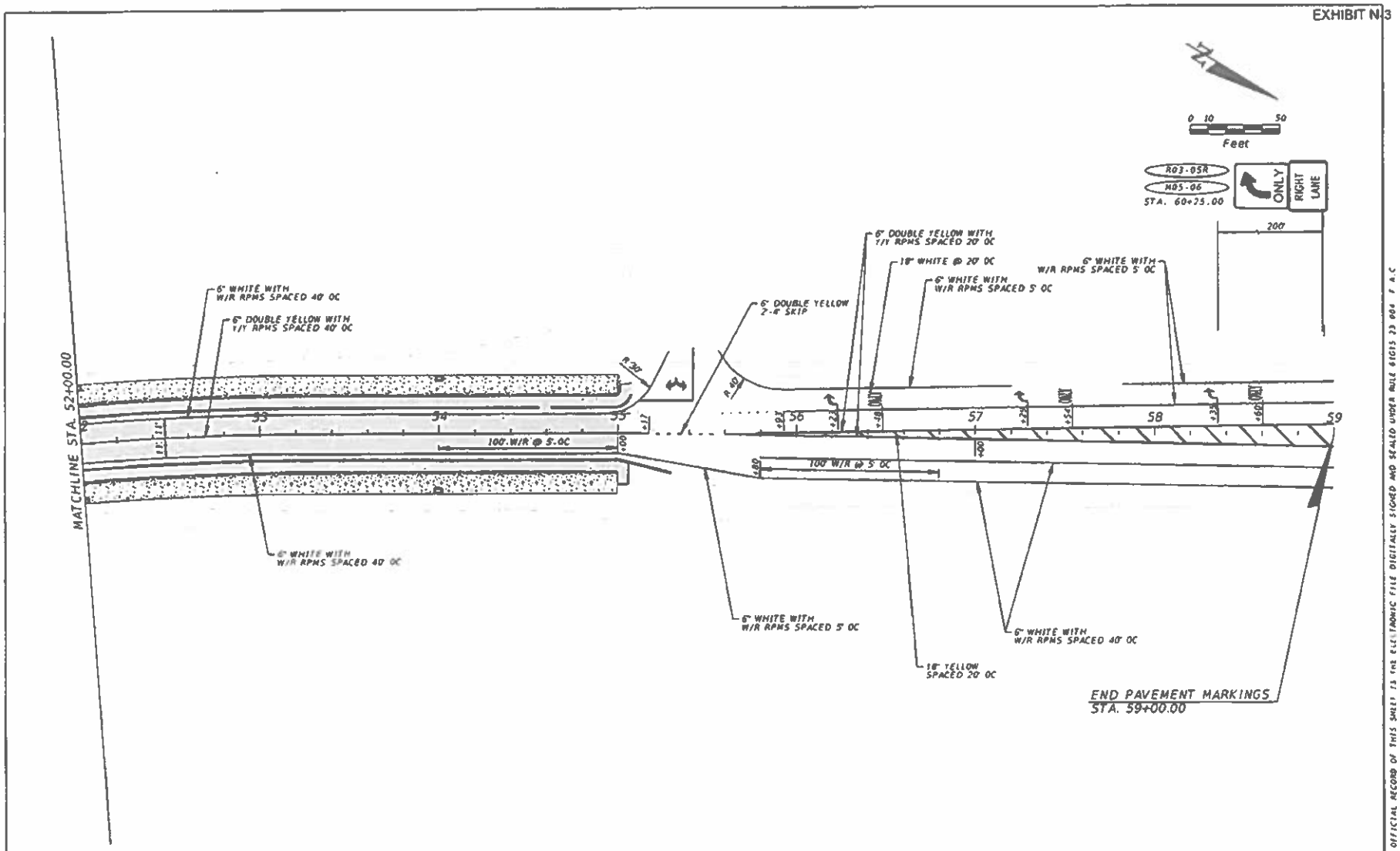

THE OFFICIAL RECORD OF THIS SHEET IS THE ELECTRONIC FILE DIGITALLY SIGNED AND SEALED UNDER RULE 61G15-23.004 F.A.C.

REVISIONS			
DATE	DESCRIPTION	DATE	DESCRIPTION

ROBERT R. VANSICKLE P.E
P.E LICENSE NUMBER 40272
STV INCORPORATED
5200 BELFORT ROAD, SUITE 400
JACKSONVILLE FL 32256

CITY OF JACKSONVILLE, FLORIDA
DEPARTMENT OF PUBLIC WORKS

ROAD NO.	COUNTY	PROJECT #
ARLINGTON ROAD	DUVAL	

SIGNING & PAVEMENT MARKING PLANS

SHEET NO. 9

Docusign Envelope ID: EA63A32D-D055-4AFF-B61C-5D90E0BE9C35

EXHIBIT N-3

Regular Exc.		EXHIBIT N-3	
A	V	A	V

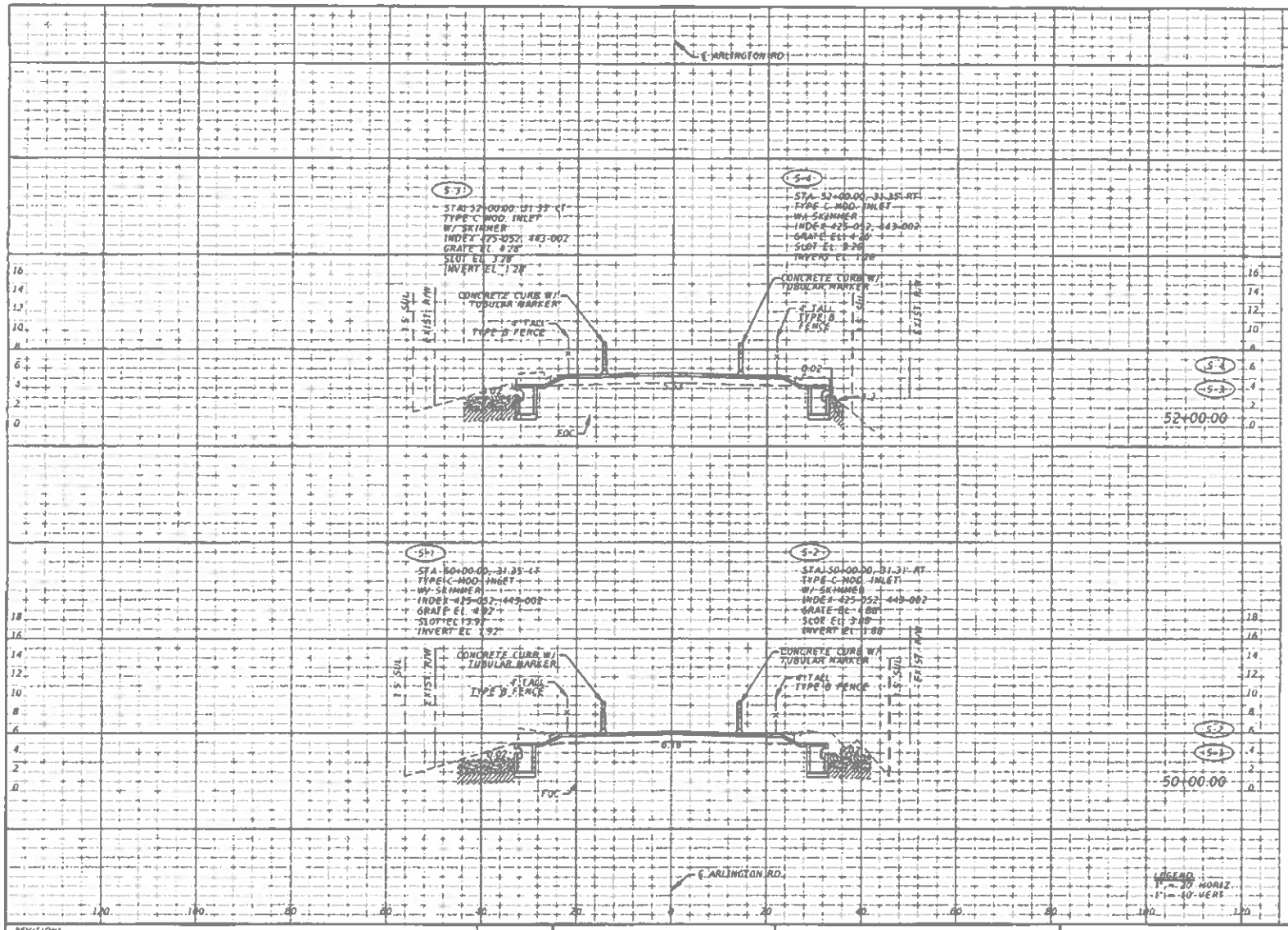

REVISIONS			
DATE	DESCRIPTION	DATE	DESCRIPTION

WILLIAM L. STEWART, P.E.
P.E. LICENSE NUMBER 42764
STV INCORPORATED
5200 BELFORT ROAD, SUITE 400
JACKSONVILLE, FL 32256

CITY OF JACKSONVILLE, FLORIDA
DEPARTMENT OF PUBLIC WORKS

ROAD NO.	COUNTY	PROJECT #
ARLINGTON ROAD	DUVAL	

DRAINAGE STRUCTURES

SHEET NO. 10

THE OFFICIAL RECORD OF THIS SHEET IS THE ELECTRONIC FILE DIGITALLY SIGNED AND SEALED UNDER RULE 61G15-23.004 F.A.C.

Docusign Envelope ID: EA63A32D-D055-4AFF-B61C-5D90E0BE9C35

EXHIBIT N.3

Regular Exc.			
A	V	A	V

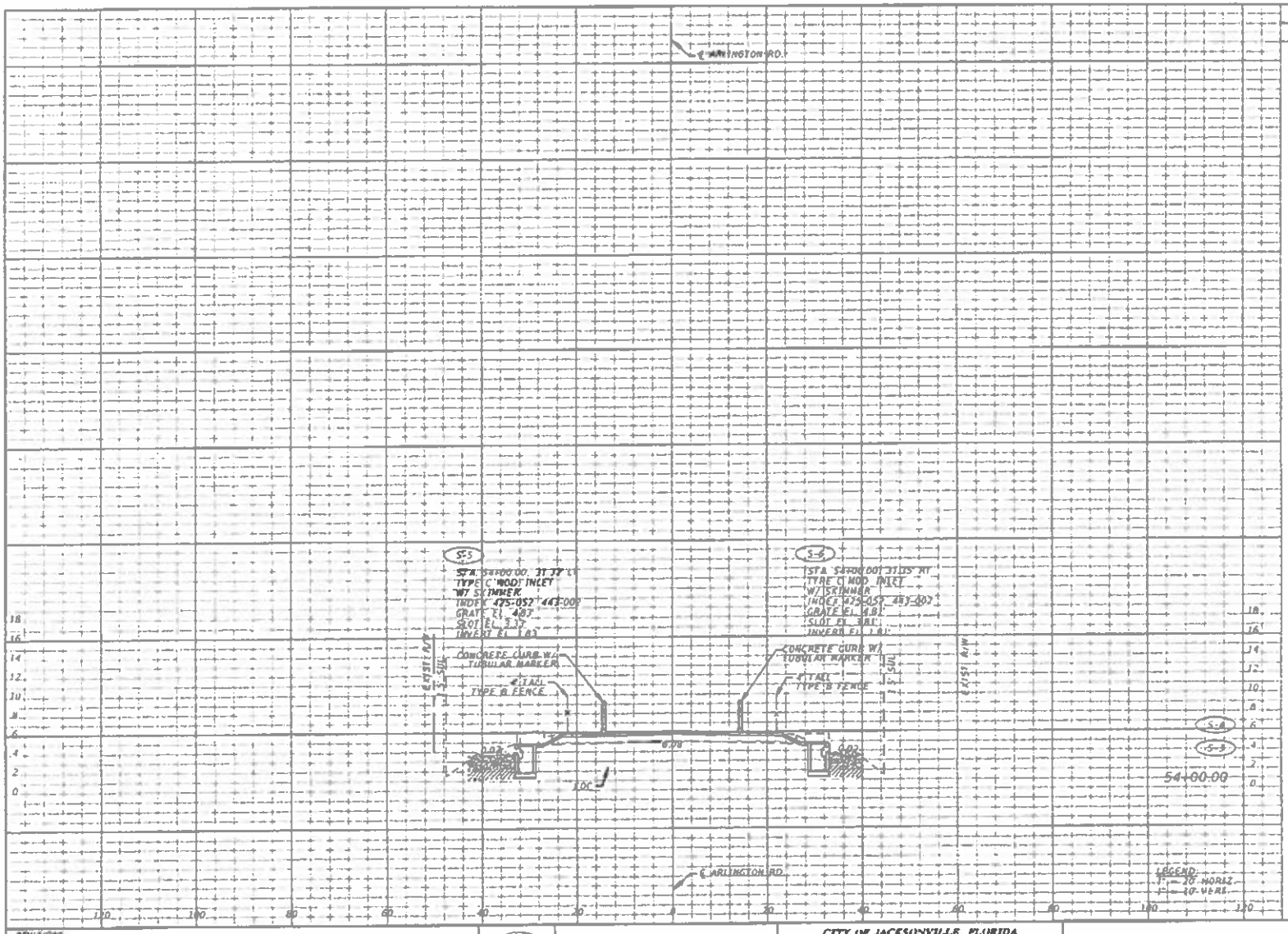

REVISIONS			
DATE	DESCRIPTION	DATE	DESCRIPTION

WILLIAM L. STEWART, P.E.
P.E. LICENSE NUMBER 42764
STV INCORPORATED
5200 BELFORT ROAD, SUITE 400
JACKSONVILLE, FL 32256

CITY OF JACKSONVILLE, FLORIDA
DEPARTMENT OF PUBLIC WORKS

ROAD NO.	COUNTY	PROJECT #
ARLINGTON ROAD	DUVAL	

DRAINAGE STRUCTURES

SHEET NO. 11

THE OFFICIAL RECORD OF THIS SHEET IS THE ELECTRONIC FILE DIGITALLY SIGNED AND SEALED UNDER RULE 61G15-23.004, F.A.C.

EXHIBIT N-3

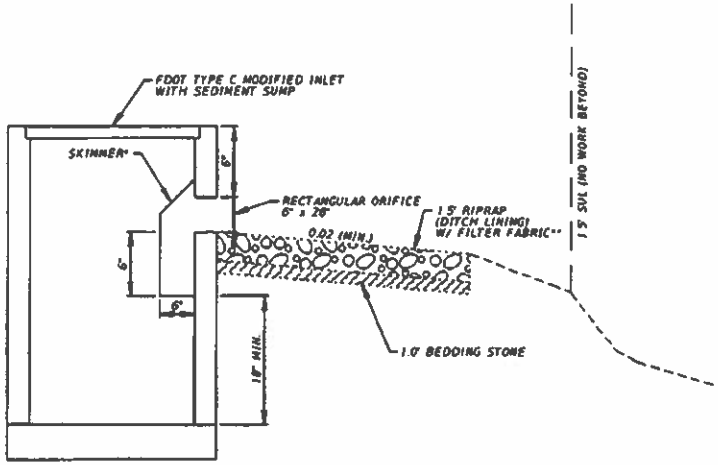

NOT TO SCALE

* REFER TO FDOT INDEX 443-002 TYPE II & 425-070 FOR MORE DETAILS.

** REFER TO FDOT INDEX 524-001 AND FDOT SPECS 514 & 530 FOR MORE DETAILS.

THE OFFICIAL RECORD OF THIS SHEET IS THE ELECTRONIC FILE DIGITALLY SIGNED AND SEALED UNDER RULE 61G15 23 004 F.A.C.

REVISIONS			
DATE	DESCRIPTION	DATE	DESCRIPTION

WILLIAM L. STEWART, P.E.
P.E. LICENSE NUMBER 42764
STV INCORPORATED
5200 BELFORT ROAD, SUITE 400
JACKSONVILLE, FL 32256

CITY OF JACKSONVILLE, FLORIDA
DEPARTMENT OF PUBLIC WORKS

ROAD NO.	COUNTY	PROJECT #
ARLINGTON ROAD	DUVAL	

DRAINAGE STRUCTURE DETAIL

SHEET NO. 12

Docusign Envelope ID: EA63A32D-D055-4AFF-B61C-5D90E0BE9C35

EXHIBIT N-3

SUMMARY OF VERIFIED UTILITIES

Vvh #	UTILITY DESCRIPTION (Owner, type)	SIZE	MATERIALS	@ and/or ℄			EXISTING GROUND ELEVATION	TOP ELEVATION	COMMENTS
				STATION	OFFSET	LT/RT			
1	AT&T, FIBER OPTIC CABLE	UNKNOWN	PVC	52+22.1	13.7	LT	5.51	2.45	
2	AT&T, FIBER OPTIC CABLE	UNKNOWN	PVC	51+37.1	19.3	LT	5.34	0.75	
3	AT&T, FIBER OPTIC CABLE	UNKNOWN	PVC	50+72.9	70.0	LT	5.69	0.85	
4	AT&T, FIBER OPTIC CABLE	UNKNOWN	UNKNOWN	47+82.3	18.2	LT	9.80	4.41	

LOCATE AND PROTECT ALL EXISTING UTILITIES DURING CONSTRUCTION
CALL SUNSHINE ONE-CALL FOR FIELD LOCATIONS: 811 OR 1-800-723-4770

EXISTING UTILITY OWNERS:

COMPANY	CONTACT PERSON	CONTACT PHONE/EMAIL
AT&T FLORIDA	P K PATEL	904-727-1568
COMCAST	JAMES GRAHAM	904-380-6341
JEA ELECTRIC DISTRIBUTION	MICHAEL SHORT	904-665-7048
JEA ELECTRIC TRANSMISSION	DARRELL HAMILTON	HAMIDD@JEA.COM
JEA WATER & SEWER	MICKHAEL SULAYMAN	904-665-8713
JEA FIBER	ALEX ZECHER	904-763-3317
UNITI FIBER	TRAVIS GEORGE	251-457-7225
VERIZON	KENNETH WHEAT	904-239-8500
QUANTA	ANDREW RATTEREE	ARATTEREE@QUANTATELCOM.COM

THE OFFICIAL RECORD OF THIS SHEET IS THE ELECTRONIC FILE DIGITALLY SIGNED AND SEALED UNDER RULE 61G15-23.004 F.A.C.

REVISIONS			
DATE	DESCRIPTION	DATE	DESCRIPTION

ROBERT R. VANSICKLE, P.E
P.E. LICENSE NUMBER 40272
STV INCORPORATED
5200 BELFORT ROAD, SUITE 400
JACKSONVILLE, FL 32256

CITY OF JACKSONVILLE, FLORIDA
DEPARTMENT OF PUBLIC WORKS

ROAD NO.	COUNTY	PROJECT #
ARLINGTON ROAD	DUVAL	

SUMMARY OF VERIFIED UTILITIES

SHEET NO. 13

Docusign Envelope ID: EA63A32D-D055-4AFF-B61C-5D90E0BE9C35

Docusign Envelope ID: EA63A32D-D055-4AFF-B61C-5D90E0BE9C35

Docusign Envelope ID: EA63A32D-D055-4AFF-B61C-5D90E0BE9C35

SUBJECT: RFQ- FOR DESIGN-BUILD SERVICES FOR HORIZONTAL/CIVIL (HORIZONTAL) DESIGN BUILD PROJECTS

BID #: CDB-0132-21 **OPEN DATE: 2021 AUG 04**

COMPETITIVE SEALED PROPOSAL EVALUATION COMMITTEE

KIND AND BASIS OF CONTRACT: CONSTRUCTION- DESIGN/BUILD

AGENCY: PUBLIC WORKS

BASIS OF AWARD: EVALUATION CRITERIA

NUMBER OF BIDS INVITED: 5 **NUMBER RECEIVED: 4** **OTHER: 0**

SUMMARY OF BIDS AND RECOMMENDED ACTIONS:
Recommend approval to amend the award with J.B. Coxwell Contracting, Inc. (contract number 71754-22), to incorporate the attached Scope and Fee Summary, Exhibit N-2, known as Amendment 12B for phase 2 of the Arlington Road North Improvements in the amount of $656,757.41. The revised GMP amount is $913,704.06. Work to be completed within 75 days from the notice to proceed.

FUNDING SOURCE: 32124.153104.565051.010560.00000000.00000.0000000 - To be executed by formal contract amendment through the Office of General Counsel and encumbered by purchase order.

ATTACHMENTS: Recommendation Memo, Exhibit N-2, Previous Award(s)

ANALYST: for Benjamin Kemp **RESPECTFULLY SUBMITTED:** DUSTIN FREEMAN, CHIEF PROCUREMENT DIVISION

CONCURRENCE BY: Robin G. Smith, P.E., Chief, Engineering and Construction Management

(ALL AWARD ACTIONS SUBJECT TO LAWFULLY APPROPRIATED FUNDS)
ACTION OF CSPEC COMMITTEE ON RECOMMENDATIONS ABOVE

MEMBERS APPROVING 5 MEMBERS DISAPPROVING 0 DATE: 9/14/2023

OTHER:

ACTION OF AWARDING AUTHORITY DATE 9/18/23

APPROVED ✓ DISAPPROVED

OTHER

SIGNATURE OF AUTHENTICATION

Karen Bowling
~~Chief Administrative Officer~~
For: Mayor Donna Deegan
Under Authority Of:
Executive Order No: 2023-02

Docusign Envelope ID: EA63A32D-D055-4AFF-B61C-5D90E0BE9C35

SUBJECT: RFQ- FOR DESIGN-BUILD SERVICES FOR HORIZONTAL/CIVIL (HORIZONTAL) DESIGN BUILD PROJECTS

BID #: CDB-0132-21 **OPEN DATE: 2021 AUG 04**

COMPETITIVE SEALED PROPOSAL EVALUATION COMMITTEE

KIND AND BASIS OF CONTRACT: CONSTRUCTION- DESIGN/BUILD

AGENCY: PUBLIC WORKS

BASIS OF AWARD: EVALUATION CRITERIA

NUMBER OF BIDS INVITED: 5 **NUMBER RECEIVED: 4** **OTHER: 0**

SUMMARY OF BIDS AND RECOMMENDED ACTIONS:
Recommend approval to amend the award with J.B. Coxwell Contracting, Inc. (contract number 71754-22), to incorporate the attached Scope and Fee Summary, Exhibit N-1, known as Amendment 12A to provide the initial installation of temporary traffic control measures and maintenance as depicted in the early works plan set for Arlington Road North of Strawberry Creek Roadway Improvements, in the amount of $256,946.65.

FUNDING SOURCE: 32124.153104.565051.010560.00000000.00000.0000000 - To be executed by formal contract amendment through the Office of General Counsel and encumbered by purchase order.

ATTACHMENTS: Recommendation Memo, Exhibit N-1, Previous Award(s)

ANALYST: _____ JACLYN STAMOS

RESPECTFULLY SUBMITTED: _____ DUSTIN FREEMAN, CHIEF PROCUREMENT DIVISION

CONCURRENCE BY: Robin G. Smith, P.E., Chief, Engineering and Construction Management

(ALL AWARD ACTIONS SUBJECT TO LAWFULLY APPROPRIATED FUNDS)
ACTION OF CSPEC COMMITTEE ON RECOMMENDATIONS ABOVE

MEMBERS APPROVING 5 MEMBERS DISAPPROVING 0 DATE: 2/16/2023

OTHER: _____

ACTION OF AWARDING AUTHORITY DATE 2/16/23

APPROVED ✓ DISAPPROVED _____

OTHER _____

SIGNATURE OF AUTHENTICATION _____

Brian Hughes
Chief Administrative Officer
For: Mayor Lenny Curry
Under Authority of:
Executive Order No: 2019-02

Docusign Envelope ID: EA63A32D-D055-4AFF-B61C-5D90E0BE9C35

SUBJECT: DESIGN-BUILD SERVICES FOR HORIZONTAL/CIVIL ENGINEERING (HORIZONTAL) DESIGN-BUILD PROJECTS

BID # CDB-0132-21

OPEN DATE: 2021-08-04

COMPETITIVE SEALED PROPOSAL EVALUATION COMMITTEE

KIND AND BASIS OF CONTRACT: CONSTRUCTION – DESIGN/BUILD- PRE-QUALIFICATIONS

AGENCY: PUBLIC WORKS

BASIS OF AWARD: EVALUATION CRITERIA

NUMBER OF BIDS INVITED: 5 NUMBER RECEIVED: 4 OTHER: 0

SUMMARY OF BIDS AND RECOMMENDED ACTIONS:

The City had previously issued this RFQ and the evaluation committee has evaluated proposals. Subsequently, presentations were conducted and evaluated on November 17, 2021. Based upon the combination of proposal and presentation evaluations, scores and rankings are as follows (Listed in alphabetical order):

3) Baker Consulting and Engineering, LLC, d/b/a Baker Design Build – 119.00
1) J.B. Coxwell Contracting, Inc. – 127.25
2) Superior Construction Co., Inc. – 119.75

Recommend approval of award to J.B. Coxwell Contracting, Inc., as receiving the highest score in accordance with the evaluation and ranking above. The period of service will be five (5) years from the effective date of the contract with funding not-to-exceed $8,000,000.00 annually with carryover for any unused portion. To be executed by formal contract through the Office of General Counsel using the negotiated contract rate schedule.

ATTACHMENTS: Recommendation Memo, Scoring Matrix, Section 2.6, Attachment B- Evaluation Criteria, JSEB Memo Previous Award

ANALYST: BRYAN MATUS

RESPECTFULLY SUBMITTED: GREGORY PEASE CHIEF PROCUREMENT DIVISION

CONCURRENCE BY: Robin G. Smith, P.E., Chief, Engineering and Construction Management

(ALL AWARD ACTIONS SUBJECT TO LAWFULLY APPROPRIATED FUNDS)
ACTION OF CSPEC COMMITTEE ON RECOMMENDATIONS ABOVE

MEMBERS APPROVING 5 MEMBERS DISAPPROVING 0 DATE: 4/21/2022

OTHER

ACTION OF AWARDING AUTHORITY DATE 4/21/2022

APPROVED ✓ DISAPPROVED:

OTHER:

Brian Hughes
Chief Administrative Officer
For: Mayor Lenny Curry
Under Authority of
Executive Order No. 2019-02

SIGNATURE OF AUTHENTICATION

Docusign Envelope ID: EA63A32D-D055-4AFF-B61C-5D90E0BE9C35