Docusign Envelope ID: 127460E9-814A-4E80-A0A5-49A9B4B0BC73

City of Jacksonville, Florida
Procurement Award Form (PAF)

Part 1: Form Type JPAC Award Request and Administrative Details

Goods and/or Services: Design Build Services - Federally Funded Horizontal/Civil Design - CDB-0142-23

Requested Action/Authority:

Recommend approval to amend the award with J.B. Coxwell Contracting, Inc. for Amendment #1A for Memorial Park Balustrade in the amount of $45,977.65.

Justification/Explanation:

Sixty percent (60%) design services for the removal and replacement of the Balustrade wall at Memorial Park based on the provided DCP and project site visits.

Legal Contract #:	TBD	Contract Date:	09/19/2024	Change Order/AMD #:	Amendment #1A	
PO/Release #:	TBD	Bid Date:	01/24/2024	Awarded Supplier:	J.B. Coxwell Contracting Inc	
Licenses Verified:	N/A	Effective Date:	09/19/2024	Basis of Award:	Highest Evaluated	
Federally Funded:	Yes	No. Invited:	4	Responses Received:	4	Attachments:
Solicitation:	N/A - CDB-0142 - 23			Procurement Contract #:	POA - TBD	
Executed By:	Office of General Counsel					

PoP:Base:	Project Completion	Options:	N/A	Extension(s):	N/A
JSEB Rec.:	N/A	%:	N/A	Bonds Waived Pursuant To:	N/A

Fund:	10602	Center:	12201	Acct:	549040	Proj:	000000	Activity:	00001879	$	45,977.65
Fund:		Center:		Acct:		Proj:		Activity:		$	
Fund:		Center:		Acct:		Proj:		Activity:		$	

New NTE/GMP:	$ 45,977.65	Contingent Amount:	$ 0	DMP/ODPO Amount:	$ 0

Using Agency/BU:	PWGM:R-O-W_AND_STORMWATER_MAINTENANCE			
Concurrence:	DocuSigned by: Sheldon D. Gibbs, P.E. 843DE27A46A74CA...	Title:	CHIEF OF ENGINEERING CONSTRUCTION MANAGEMENT	9/10/2024
Concurrence:	DocuSigned by: Nina Sicker 1EFA223D5D23487...	Title:	DIRECTOR OF PUBLIC WORKS	9/11/2024
Concurrence:		Title:		
Concurrence:		Title:		

Procurement Analyst/Buyer:	Signed by: Warchol, LeeAnn 72F42AB443D04B7...	Chief of Procurement:	Signed by: Robert Waremburg, for Dustin Freeman 4912CA1D431247A... 9/16/2024
Name:	Warchol, LeeAnn	Name:	Dustin L. Freeman

Part 2: JPAC Actions on Above Requests/Recommendations
All Award Actions Subject to Lawfully Appropriated Funds

Members Who Approve:	
Members Who Disapprove:	
Other Action:	

Date:

Part 3: Final Awarding Authority Action

Action:

Date:

Signature:

Docusign Envelope ID: 127460E9-814A-4E80-A0A5-49A9B4B0BC73

PAF Instructions

Form Type: Select the type of award from the dropdown options. This form will be used for all Procurement awards (Administrative Awards and JPAC Requests).

Goods and/or Services: Enter a brief description of the types of goods and services included in the request.

Requested Action/Authority: Enter a brief description of the requested action or authority being sought. i.e.; *request permission to award to the lowest, responsive responsible bidder for ITB or award the highest ranked supplier for an RFP*.

Justification/Explanation: Enter a brief justification or explanation for the requested action. Use this box to add any additional information such as additional account strings, or other information essential for contract execution.

Legal Contract Number: Provide the existing City contract number if applicable. This will be the same number as your POA number.

Contract Date: Select the effective date for the contract using the calendar option in the form. Leave blank for contracts to become effective on the execution date.

Change Order/AMD #: Provide the applicable Change Order or Amendment number represented by this request.

Date: Enter the date of PAF submission.

Effective Date: Enter the effective date of requested authority and/or action.

Solicitation: Select the competitive procurement method used (1Cloud generated prefix), enter the 1Cloud generated numbering sequence, and 1Cloud generated fiscal year of solicitation

Basis of Award: Select from Lowest Price Technical Acceptable (LPTA), Highest Price Technical Acceptable (HPTA),

Procurement Contract #: This is your PO number. Select Type, Enter Number

PO/Release Number: Enter PO Release Number

Awarded Supplier: Enter Awarded Supplier Name

Federally Funded: Select yes or no from dropdown if Federal Funds will be used.

Responses Received: This is the number of responses received.

No Bids Received: The number of responses received that indicated supplier would not bid.

Executed By: Select whether executed by OGC or JPAC / Chief of Procurement

PoP Base: Select the Period of Performance for the initial period.

Options: Period for each renewal period i.e. one (1) two (2) year.

Docusign Envelope ID: 127460E9-814A-4E80-A0A5-49A9B4B0BC73

Extensions: How many extensions have we preformed after the initial base period and option periods have been completed?

JSEB Goal: Select the percentage established by JSEB.

JESB Other: Select Encouragement or Set Aside Option

Bonds Waived Pursuant to: Select authority allowing bonds to be waived.

Funding Source: Fund/Center/Account/Project/Activity, all fields are required even if zeros.

New NTE/GMP: Enter the new total not to exceed the amount. Note, this should match the contract maximum indebtedness, if applicable**.**

Contingent Amount: If your agency requests an allowance for unforeseen additional expenses, then specify the amount of your requested increase and new NTE that represents the contingency allowance. This is over and above any quote.

DMP/ODPO Amount: Enter the total Direct Materials Purchase/Owner Direct Purchase Order amount for project.

Attachments: Name any attachments included as supplemental information to the PAF.

Using Agency/BU: This should be the requesting agency/requirement owner.

Concurrence: Electronic Signature

Title: Enter the title of person electronically signing form.

**Any fields where there is no data available, or no entry is required, either leave it blank or enter N/A. Any fields where there is known data, include for informational purposes. Any changes to an original award should contain the data that is being changed and any other relevant data required for JPAC review and approval.*

Docusign Envelope ID: 127460E9-814A-4E80-A0A5-49A9B4B0BC73

EXHIBIT C-1

J.B. Coxwell Contracting, Inc.
6741 Lloyd Road West
Jacksonville, Florida 32254
Office (904) 786-1120 Fax (904) 783-2970

August 16, 2024

Bob Scott, P.E.
City of Jacksonville Department of Public Works
Engineering & Construction Management Division
214 N. Hogan Street, 10th Floor
Jacksonville, Florida 32202

Re: Fee Proposal for Memorial Park Balustrade
Design-Build Services for Fed. Funded Horizontal/Civil Projects for City of Jacksonville
City Contract No. TBD

Dear Mr. Scott, P.E.:

J.B. Coxwell Contracting, Inc. (JBCCI) is pleased to submit for your review and consideration the following design-build scope of services and attached lump sum fee proposal for the above referenced project. The scope of work in the attached Fee proposal includes Sixty percent (60%) design services for the removal and replacement of the Balustrade wall at Memorial Park based on the provided DCP and project site visits. Design, geotechnical evaluations, and permitting services are limited to the design scope in GAI's proposal and does not include tensest approval.

The proposed lump sum amount is $45,977.65, which does not include a project contingency. The project contingency is for the Design-Builder's benefit and not for changed field conditions, unknown field conditions or added scope of work. The work related to this project will be completed within sixty calendar days (60) from notice-to-proceed (NTP).

This lump sum proposal is inclusive of only those services noted on the attached fee summary and which are anticipated at this time. No services or work other than those noted in the fee proposal are included. In addition, any unknown condition(s) which may surface during construction or any other increase in scope of services may result in a request for applicable fees. No work will proceed however, without first obtaining approval from the City of Jacksonville (COJ) for any applicable services.

It is our understanding that the design of the existing bulkhead is not available to our Design Team. Without this information, we are unable to design the connection between the existing bulkhead and the balustrade. Therefore, our design services are limited to strengthening of the connections between the bottom rail, balustrade and top rail. Warranties and/or guarantees cannot be provided for the balustrade reconstruction to withstand named storms (hurricanes/tropical storms). After preliminary design is complete, our Design Team will provide COJ two options for the balustrade reconstruction. Once COJ chooses one of the options (no more than 7 calendar days after submittal), GAI will finalize the 60% design. Concurrent with design, JBCCI will provide high level budgets for the two options to assist COJ in their decision.

After reviewing the DCP, the plans provided and after several site visits, our Design Teams have located several items that will be considered that either affect cost or time. The lighting will need to be uninstalled and reinstalled with the balustrade reconstruction. There are also several voids behind the bulkhead that will need to be addressed. Two "L" shaped walls behind the balustrade will need to be reconstructed as well. The newly installed water filled barrier wall will need to be shifted out for the reconstruction of the balustrade wall and

Docusign Envelope ID: 127460E9-814A-4E80-A0A5-49A9B4B0BC73

then removed after construction is complete. Due to the construction, the path will need to be reworked after the balustrade is reconstructed with minor restoration.

This proposal is valid for 30 days and we have engineers available to start this work immediately. We are again very appreciative of the opportunity to provide you with our design-build services. Should you have any questions or need any further information, please do not hesitate to contact us.

Regards,
J.B. Coxwell Contracting, Inc.

Josh Sowards

Josh Sowards
Director of Design Build Services

Docusign Envelope ID: 127460E9-814A-4E80-A0A5-49A9B4B0BC73

EXHIBIT C-1

Contract Fee Sumary for Engineering Division
DB Services for Fed Funded - Horizontal/Civil Engineering Projects
City of Jacksonville, FL

PART I - GENERAL

1. Project COJ DB Fed Fund- Memorial Park Ballustrade 60% Design Services	**2. City Contract Number** TBD
3. Name of Contractor **J. B. Coxwell Contracting, Inc.**	**4. Date of Proposal** 8/16/2024

PART II - LABOR RELATED COSTS

5. DIRECT LABOR	Hourly Rate	Estimated Hours	Estimated Costs	TOTAL
Principal (Senior Officer)	$ 110.00	2.00	$ 220.00	
Director of Design Build Services (Responsible Prof.)	$ 100.00	30.00	$ 3,000.00	
Project Manager	$ 85.00	-	$ -	
Administrative Assistant	$ 40.00	5.00	$ 200.00	
Estimator	$ 75.00	4.00	$ 300.00	
Estimating Assistant	$ 55.00	2.00	$ 110.00	
Staff Accountant	$ 60.00	-	$ -	
			TOTAL DIRECT LABOR	$ 3,830.00
6. OVERHEAD (Combined Fringe Benefits & Administrative) ***Overhead Rate 54.46%***				$ 2,085.82
			LABOR SUB-TOTAL	$ 5,915.82

PART III - OTHER COSTS

7. MISCELLANEOUS DIRECT COSTS	
Misc. Direct Expenses	$ 750.00
MISCELLANEOUS DIRECT COSTS TOTAL	$ 750.00
8. SUBCONSULTANTS/SUBCONTRACTORS	
GAI Consultants, Inc. (ADA Accessible Parking Space - 100% Design - Ten-Set Approved)	$ 34,514.34
SUBCONSULTANTS / SUBCONTRACTORS TOTAL	$ 34,514.34
OTHER COSTS SUB-TOTAL	$ 35,264.34

PART IV - CONTINGENCY

9. CONTINGENCY	x ***0%***	

PART V - FEE SUMMARY

SUBTOTAL - (Parts II & III, IV)		**$41,180.16**
10. Design Builder Fee (Parts II & III)	x ***10.0%***	$ 4,118.02
11. Payment & Performance Bond		**$679.47**
GRAND TOTAL (1-11)		**$ 45,977.65**

Docusign Envelope ID: 127460E9-814A-4E80-A0A5-49A9B4B0BC73

EXHIBIT C-1

August 15, 2024

Josh Sowards
Project Manager
J. B. Coxwell Contracting, Inc.
6741 Lloyd Road
Jacksonville, FL 32254

Subject: RFQ: CDB-0142-23: Memorial Park Balustrade Repairs

Dear Mr. Sowards,

GAI Consultants, Inc. (GAI) respectfully submits the following Scope of Services and Design Fee Proposal to provide preliminary design services as outlined in the Design Criteria Package (DCP) issued by the City on August 1, 2024.

Background

The City previously designed and constructed improvements to the balustrade along the bulkhead wall at Memorial Park. Those improvements are outlined in the 2020 design plans provided by the City as part of the DCP.

Since those improvements were constructed, there have been a series of storm events which have caused the balustrades and top railing of the balustrades to fail as advised in the DCP.

The JBCCI-GAI Design Build Team proposes to perform field data collection, review the 2020 design plans, and propose two (2) improved balustrade design options for the City to choose from, as part of this work effort. GAI will then progress the selected design option to a 60% design completion suitable for development of a Guaranteed Maximum Price (GMP) final design and construction proposal. This proposal scope of work assumes that a brand-new balustrade will be constructed and that existing materials will not be utilized in the design or construction.

Scope of Work

GAI's scope of work will comply with Section 3 of the DCP. More specifically, GAI will provide the following services.

Item 1 - Field Visit and Due Diligence

- Conduct initial site visits to assess the extent of damage to the balustrade and top rail.
- Document existing conditions, including photographic documentation of the existing condition.
- Document the base of the balustrade to ensure it is still in good shape as a means to document that the 2020 design has held up through recent storm events. Visually document the existing condition of the balustrade attachment to the retaining wall.
- Coordinate with a precast and restoration services contractor to discuss pros and cons of various constructability options that should be considered in the new balustrade base connection design.

Item 2 - Review of Previous Design Plans

- Review the 2020 design plans, drawings, and documentation related to the original balustrade installation.
- Identify any design elements that could have contributed to the previous failure and consider improvements.

Docusign Envelope ID: 127460E9-814A-4E80-A0A5-49A9B4B0BC73

Item 3 - Development of Design Options

Based on takeaways developed from Items 1 and 2 above, JBCCI and GAI will develop two preliminary design options for the new balustrade for consideration by the City. Both options will maintain the traditional balustrade design and aesthetic, however they will vary with regards to how they connect to the existing wall base and top-rail.

The intent is that both options will be designed to be more resistant to future storm events with the understanding that neither option can be fully "storm proof" against future storm events. The provided design will assume that the wall and embedded balustrade connection points are sufficient to provide a secure attachment for the new balustrade.

GAI will not provide any design or analysis for any component below the balustrade. All analysis, design, permitting, of the existing bulkhead wall is excluded from GAI's scope of work.

Item 4 – Advancement of the Chosen Design

Based on the client's selection from Item 3 above, GAI will proceed with the development of the chosen design option, suitable for development of a Guaranteed Maximum Price (GMP) proposal. The design will serve as the basis for 100% design and construction of the new balustrade along the existing wall. At a minimum, the 60% design will include:

- Detailed structural drawings and specifications.
- A detail showing integration with the existing bulkhead wall structure, with supporting calculations.
- Material selection and specifications, considering durability and resistance to storm events.

Item 5 – Permit Requirements

GAI will work with the City of Jacksonville to identify what permits, if any, are required to allow the construction of the new balustrades along the bulkhead wall. These permits, if any, will be obtained as part of GAI's efforts under the 100% GMP Proposal. No permitting is included under this scope of work.

If you have any questions or require any additional information, please do not hesitate to contact us.

Sincerely,

Nick Mousa, AICP
Assistant Vice President

Attachments: Fee Summary

Docusign Envelope ID: 127460E9-814A-4E80-A0A5-49A9B4B0BC73

EXHIBIT C-1

Exhibit A - Page 1 of 1
CONTRACT FEE SUMMARY FOR
GAI Consultants, Inc.

PART I - GENERAL	
1. Project - Federal Funded Misc. DB Contract Memorial Park Balustrade Repairs - Preliminary Design	**2. Project Number** TBD
3. Name of Consultant GAI Consultants, Inc.	**4. Date of Proposal** 8/15/2024

PART II - LABOR RELATED COSTS				
5. DIRECT LABOR	Hourly Rate	Estimated Hours	Estimated Cost	TOTAL
Principal	$ 131.25	4	$ 525.00	
Sr. Project Manager	$ 114.45	20	$ 2,289.00	
Project Manager	$ 105.00	0	$ 0.00	
Techincal Leader	$ 110.25	0	$ 0.00	
Lead Engineer	$ 97.02	24	$ 2,328.48	
Senior Project Engineer 2	$ 89.30	0	$ 0.00	
Senior Project Engineer 1	$ 79.70	30	$ 2,391.00	
Engineer 2	$ 69.20	0	$ 0.00	
Engineer 1	$ 57.98	0	$ 0.00	
Engineer Intern	$ 44.19	40	$ 1,767.60	
Senior Designer	$ 55.13	0	$ 0.00	
Designer/Sr. CADD Technician	$ 42.01	0	$ 0.00	
LA Director	$ 99.75	0	$ 0.00	
Sr. LA Manager	$ 74.09	0	$ 0.00	
Project LA	$ 64.22	0	$ 0.00	
LA Technician	$ 38.43	0	$ 0.00	
Planning Manager	$ 80.00	0	$ 0.00	
Sr Planner	$ 69.00	0	$ 1,104.00	
Planner	$ 54.00	0	$ 216.00	
CADD Technician	$ 29.37	16	$ 469.92	
Clerical	$ 29.69	4	$ 118.76	
Survey Manager (PSM)	$ 79.33	0	$ 0.00	
Three Man Survey Crew	$ 110.48	0	$ 0.00	
			TOTAL DIRECT LABOR	**$ 11,209.76**
6. OVERHEAD (Combined Fringe Benefits & Administrative) Overhead Rate 175.85%				$ 19,712.36
7. SUBTOTAL: Labor + Overhead (Items 5 & 6)				**$ 30,922.12**
8. PROFIT: Labor Related Costs (Item 7)			x 10%	$ 3,092.21
			SUB-TOTAL SALARY RELATED COSTS	**$ 34,014.34**

PART III - OTHER COSTS	
9. MISCELLANEOUS DIRECT COSTS (Lump Sum)	$ 500.00
MISCELLANEOUS DIRECT COSTS SUB-TOTAL	**$ 500.00**
10. SUBCONTRACTS (Lump Sum)	
SUB-CONTRACT SUB-TOTAL	**$ -**

PART IV - SUMMARY	
TOTAL LUMP SUM AMOUNT (Items 5, 6, 8, 9 and 10)	**$ 34,514.34**

Docusign Envelope ID: 127460E9-814A-4E80-A0A5-49A9B4B0BC73

EXHIBIT C-1

CITY OF JACKSONVILLE, FLORIDA
PUBLIC WORKS DEPARTMENT

DESIGN CRITERIA PACKAGE
ISSUED TO:

J. B. COXWELL CONTRACTING, INC.

FOR

MEMORIAL PARK BALUSTRADE

RELEASE DATE: August 1, 2024

PREPARED BY:

PUBLIC WORKS DEPARTMENT
ENGINEERING & CONSTRUCTION MANAGEMENT DIVISION

Docusign Envelope ID: 127460E9-814A-4E80-A0A5-49A9B4B0BC73

EXHIBIT C-1

MEMORIAL PARK BALUSTRADE

DESIGN CRITERIA PACKAGE

TABLE OF CONTENTS

Description	Page
Table of Contents	2
Introduction	3
Section 1 – Definitions and Terms	4
Section 2 – Project Conditions	9
Section 3 – Scope of Work	11
Section 4 – Submittal of TP, GMP, and GCD	12

Docusign Envelope ID: 127460E9-814A-4E80-A0A5-49A9B4B0BC73

CITY OF JACKSONVILLE, FLORIDA

MEMORIAL PARK BALUSTRADE

DESIGN CRITERIA PACKAGE

RELEASE DATE: August 1, 2024

INTRODUCTION

A **"Design Criteria Package"** provides concise, performance-oriented drawings and/or specifications for a public construction project. The purpose of this design criteria package is to furnish sufficient information to allow a Design Build Firm to prepare a proposal consisting of the Technical Proposal and the Guaranteed Maximum Price and to permit the City to conduct legitimate, arms-length discussions and conferences to reach an agreement with the Design Build Firm on terms of the Guaranteed Maximum Price.

The following Design Criteria Package specifies performance-based criteria for the design of the Independent Drive Realignment.

The following are legal authorities governing this solicitation:

1. Section 287.055, Florida Statutes – Consultants' Competitive Negotiation Act
2. Chapters 471 and 489, Florida Statutes.

When awarded the Project, the Design Build Firm shall be responsible for the design of the Project in compliance with the provisions of this Design Criteria Package and the City Contract #71754-22.

The Design Criteria Package shall become an integral part of a Purchase Order issued as provided in the City Contract #71754-22 with J.B. Coxwell Contracting, Inc. for Design Build Services for Horizontal Engineering Projects.

Docusign Envelope ID: 127460E9-814A-4E80-A0A5-49A9B4B0BC73

SECTION 1

DEFINITIONS AND TERMS

1-1 GENERAL.

The City of Jacksonville ("The City"), Public Works Department put together and approved the following Plans and Specifications called "The Design Criteria Package (DCP)" for the purpose of allowing the selected Design Build Firm to prepare the Technical Proposal (TP) to prepare the 60% design proposal within **7 calendar days from the release date of the DCP.**

The Design Build Firm shall submit its proposal for the Memorial Park Balustrade. Submit the proposal, consisting of the Technical Proposal for 60% design to the City Project Manager, Robert Scott, P.E., Engineering and Construction Management Division, 10th floor at 214 N Hogan Street, Jacksonville, FL 32202 no later than 3:00 P.M. on August 8, 2024.

The provisions of this DCP represent the technical, material, and quality requirements for the foregoing project. The Design Build Firm is bound by these requirements during design of the Memorial Park Balustrade project.

The Design Criteria Professional may amend the provisions of the DCP after it has been released to the Design Build Firm but prior to the expiration of the 7-day period designated for submitting the TP and GMP to the City.

A DCP amendment may be issued at the City's initiative or at the request of the Design Build Firm, if the amendment is in the best interest of the City.

Sentences that direct the Design Build Firm to perform work are written in the active voice-imperative mode in the form of commands. The subject of these commands is clearly understood as the "Design Build Firm".

1-2 ABBREVIATIONS.

The following abbreviations, when used in the DCP, represent the full text as shown:

ANSI	American National Standard Institute, Inc.
ASCE	American Society of Civil Engineers
ASME	American Society of Mechanical Engineers
ASTM	American Society for Testing and Materials
AWWA	American Water Works Association

Docusign Envelope ID: 127460E9-814A-4E80-A0A5-49A9B4B0BC73

CRSI	Concrete Reinforcing Steel Institute
EPA	Environmental Protection Agency of the United States Government
FBC	2007 Florida Building Code System
FDEP	Florida Department of Environmental Protection
FDOT	Florida Department of Transportation
ICC	International Code Council
JEA	JEA aka Jacksonville Electric Authority
MSTCSD	Minimum Specifications for Traffic Control Signals and Devices
MUTCD	Manual on Uniform Traffic Control Devices
NACTO	National Association of City Transportation Officials
NEC	National Electrical Code (NFPA No. 70, 2005 Edition)
NEMA	National Electrical Manufacturers Association
NFPA	National Fire Protection Association
OSHA	Occupational Safety and Health Administration
UL	Underwriters' Laboratories

1-3 APPLICABLE STANDARDS, SPECIFICATIONS, TEST METHODS, AND CODES.

The Design Build Firm shall use standards, specifications, test methods, or other codes as specified in the Standard Specifications for the City of Jacksonville, Public Works Department and FDOT Standard Specifications for Road and Bridge Construction as applicable. Use the most current editions of standards, specifications, test methods, or codes at the time of submitting the bid.

1-4 DEFINITIONS.

The following terms, when used in the DCP, have the meaning as described:

Bidder: For the purpose of this solicitation, the term "Bidder" is deemed to mean a Design Build Firm or Design-Builder submitting a proposal consisting of the TP, the GMP, and the GCD.

Calendar Day: Every day shown on the calendar, ending and beginning at midnight.

City: The City of Jacksonville, Florida, including its Procurement Division, and the Public Works Department.

Change Order: A written order issued by the City and accepted by the Design Build Firm as provided in the City Contract #71754-22.

Consultant: The Professional Engineer or Engineering Firm registered in the State of Florida. The consultant may be the Engineer of Record or may provide services to the Engineer of Record.

Docusign Envelope ID: 127460E9-814A-4E80-A0A5-49A9B4B0BC73

Contract Bond: The security furnished by the Design Build Firm for the purpose of the City Contract #71754-22.

Contract Claim (Claim): A written demand submitted to the City (Chief of the Engineering and Construction Management Division or his Designee) by the Design Build Firm seeking additional monetary compensation, time, or other adjustments to the Contract, the City disputes the entitlement or impact of which. Refer to Executive Order NO. 98-01 issued by the Mayor of the City of Jacksonville. Refer to City Contract #71754-22.

Contractor: For the purpose of this solicitation, the term "Contractor" is deemed to mean a Design Build Firm submitting the TP and the GMP.

Design Build Firm or Design-Builder: Design Build Firm means J. B. Coxwell Contracting, Inc. being under a City Contract to perform design build services.

Design Build Contract: Design Build Contract means the City Contract #71754-22.

Engineer: The Chief of the Engineering & Construction Management Division, Public Works Department, City of Jacksonville ("City Engineer"), acting directly or through his duly authorized representatives; such representatives acting within the scope of the duties and authority assigned to them. In order to avoid cumbersome and confusing repetition of expressions in this Design Criteria Package, it is provided that whenever anything is, or is to be done, if, as, or, when, or where "acceptable, accepted, approval, approved, authorized, condemned, considered necessary, contemplated, deemed necessary, designated, directed, disapproved, established, given, indicated, insufficient, ordered, permitted, rejected, required, reserved, satisfactory, specified, sufficient, suitable, suspended, unacceptable, or unsatisfactory," it shall be understood as if the expression were followed by the words "by the Engineer", "to the Engineer", or "of the Engineer".

Engineer(s) of Record: This project will have one engineer of record. The Professional Engineer or Engineering Firm registered in the State of Florida that performs services for the Design Build Firm (GAI).

Equipment: The machinery and equipment, together with the necessary supplies for upkeep and maintenance thereof, and all other tools and apparatus necessary for the construction and acceptable completion of the work.

Extra Work: Any work which is required by the Engineer to be performed and which is not otherwise covered or included in the project by the existing Contract Documents, whether it is in the nature of additional work, altered work, deleted work, work due to different site conditions, or otherwise. This term does not include a "delay".

Docusign Envelope ID: 127460E9-814A-4E80-A0A5-49A9B4B0BC73

Guaranteed Completion Date (GCD): This means the date by which the Design Build Firm shall receive substantial completion of the balustrade project of Memorial Park as provided in the Purchase Order issued based on City Contract #71754-22.

Guaranteed Maximum Price (GMP): The total maximum cost to be paid by the City for Design Build Firm's complete performance under the Design Build Contract Documents, including, without limitations, final completion of all work, all services of the Design Build Firm under the Contract, and all fees, compensation, and reimbursements to the Design Build Firm as provided in the City Contract #71754-22.

Holidays: Days designated by the City as holidays, which include, but are not limited to New Year's Day, Martin Luther King's Birthday, President's Day, Memorial Day, Independence Day, Labor Day, Veteran's Day, Thanksgiving Day and the following Friday, Christmas Eve, and Christmas Day.

Inspector: An authorized representative of the Engineer, assigned to make official inspections of the materials furnished and of the work performed by the Design Build Firm.

Laboratory: The official testing laboratory used by the City.

Materials: Any substances to be incorporated in the work under the Contract.

Plans: The signed, sealed, and dated plans, drawings and specifications prepared by either Engineer of Record and accepted by the Engineer, including reproductions thereof, showing location, character, dimensions, technical requirements, and details of the work to be performed under the Contract.

Project: Describes all activities and work necessary for the design of the Memorial Park Balustrade listed in this DCP.

Project Manager: Means a licensed design professional appropriate to the project employed by the City, who serves as the City's representative and who is responsible for the administration of the design build project.

Project Site: Means the specific location of the work to be done under the Contract.

Special Provisions: Specific clauses adopted to the City Contract #71754-22.

Superintendent: The Design Build Firm's authorized representative in responsible charge of the work under the Contract.

Docusign Envelope ID: 127460E9-814A-4E80-A0A5-49A9B4B0BC73

Technical Proposal (TP): Describes engineering plans, specifications, and calculations prepared at the 60% Design Development Level by the Design Build Firm who is submitting the Guaranteed Maximum Price and the Guaranteed Completion Date during contract negotiation with the City. The design shall be sufficiently defined by drawings, a narrative, and outline specifications to enable the City to evaluate the level of quantity and quality of the proposed design and construction based on the DCP. The TP will also serve as the comprehensive documentation enabling the City to determine the reasonableness of the GMP and the GCD. The TP shall become an integral part of the Design Build Contract.

Working Day: Any calendar day on which the Design Build Firm works or is expected to work at the construction site in accordance with the approved work progress schedule.

Docusign Envelope ID: 127460E9-814A-4E80-A0A5-49A9B4B0BC73

SECTION 2

PROJECT CONDITIONS

2-1 GENERAL

The Design Build Firm shall carefully inspect and examine the project site by such means as it may prefer before submitting its bid. The City will make the project site available to the Design Build Firm for the purpose of conducting any additional site investigation and examination upon request.

The Design Build Firm shall utilize the attached plans entitled Memorial Park Rehabilitation and dated 01-03-2020 in the preparation of the proposal and shall provide a GMP that provides for the full re-construction of the Balustrade.

2-2 CURRENT CONDITIONS

a. The Project Site and general conditions are shown on the included figures and plans.

b. It is intended that the design shall include all labor, equipment, materials, and services necessary to complete the work. The designers are cautioned to familiarize themselves with existing site conditions and to include all incidental work that might occur. The Contractor and all of his/her Subcontractors shall visit the site and become fully aware of and familiar with all existing conditions relating to this Project. The Design Build Firm shall inform itself concerning the location of existing utilities, pipelines, and structures of every type which may interfere with the work. The Design Build Firm shall prepare the proposal in full understanding of the conditions that may be encountered and the resultant responsibilities in connection therewith. All existing utilities, pipes, wires, and other structures or items which must be preserved in place shall be identified by the Design Build Firm.

Docusign Envelope ID: 127460E9-814A-4E80-A0A5-49A9B4B0BC73

Figure 1

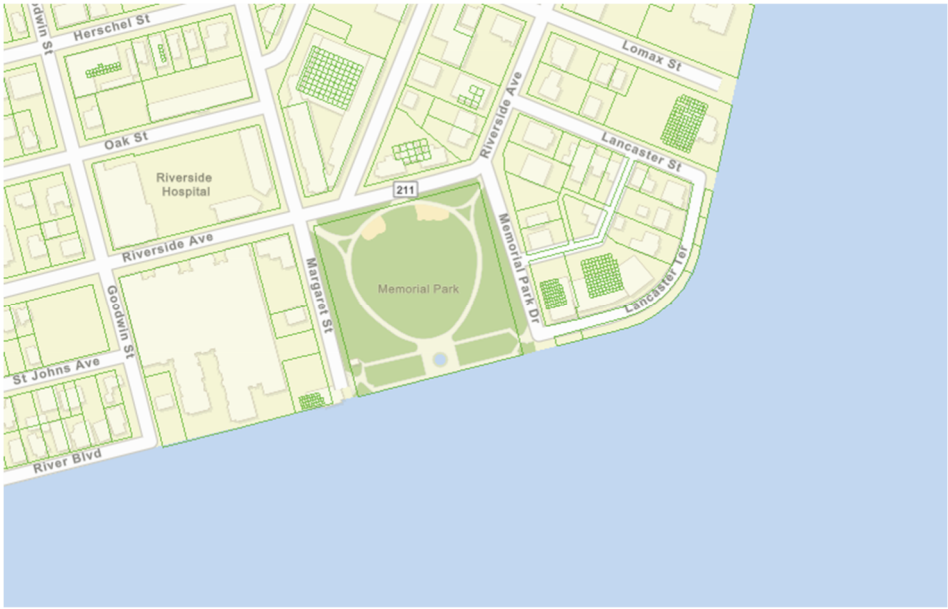

Figure 2

Docusign Envelope ID: 127460E9-814A-4E80-A0A5-49A9B4B0BC73

SECTION 3

SCOPE OF WORK

3-1 GENERAL.

The Design Build Firm is required to submit its proposal for the design work necessary to construct improvements associated with the **Memorial Park Balustrade** and the plans entitled Memorial Park Rehabilitation and dated 01-03-2020. A Project Location Map and Aerial are provided in Figures 1 and 2. Insurance, indemnification, and project bonds shall be as provided in the City Contract #71754-22.

3-2 SCOPE OF PERMITTING SERVICES

The Design Build Firm is responsible for preparing a list of all permits necessary to complete the construction phase.

3-3 DESIGN PARAMETERS AND SCOPE OF SERVICES

a. This project includes the reconstruction of the balustrade in Memorial Park. (see Figure 1).

b. The Design Build Firm shall be solely responsible for developing an erosion and sediment control plan in compliance with City, State and Federal requirements. Refer to the NPDES as established under the 40CFR122.2.

c. The Design Build Firm is responsible for obtaining soil sampling, surveys, and site investigations necessary to prepare the design. Determine the surveys needed to complete the project.

d. Determine the requirements to relocate any existing utilities that will be impacted by the Project.

e. The AutoCAD files shall comply with the following requirements: (1) All drawings shall be 100% AutoCAD files, 2012 Version or newer; (2) Use standard AIA layer system; (3) All AutoCAD files shall be transferred to CD by "E-transmit" command; (4) Use standard AutoCAD fonts/text files only, no third party application; (5) Title blocks and logos to be compatible with Items 1-4, use the City of Jacksonville title block; (6) The "z" coordinate shall be set to zero in all cases; and (7) All drawings shall be 11" x 17" (full scale).

Docusign Envelope ID: 127460E9-814A-4E80-A0A5-49A9B4B0BC73

SECTION 4

SUBMITTAL OF TP AND GMP

4-1 GENERAL

The Design Build Firm shall submit its proposal consisting of the following elements:

a. TP as defined in Sections 1 thru 3 of this DCP and in City Contract #71754-22.

b. Separate Cost of the Work consisting of the cost as defined in City Contract #71754-22

c. Proposed Design Build Firm's Contingency as provided in City Contract #71754-22.

d. Proposed Design Build Firm's Fees as provided in City Contract #71754-22.

e. A statement of additional services.

f. The time limit for acceptance of the GMP Proposal.

END OF THE DESIGN CRITERIA PACKAGE.

Docusign Envelope ID: 127460E9-814A-4E80-A0A5-49A9B4B0BC73

EXHIBIT C-1

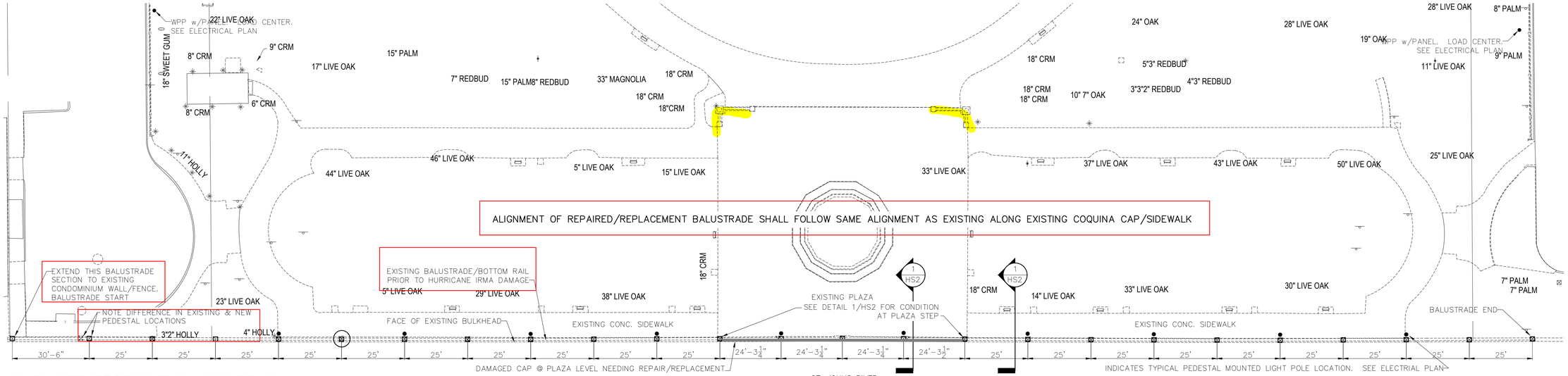

1 HS1 BALUSTRADE DEMOLITION / LAYOUT PLAN
SCALE: 1" = 20'

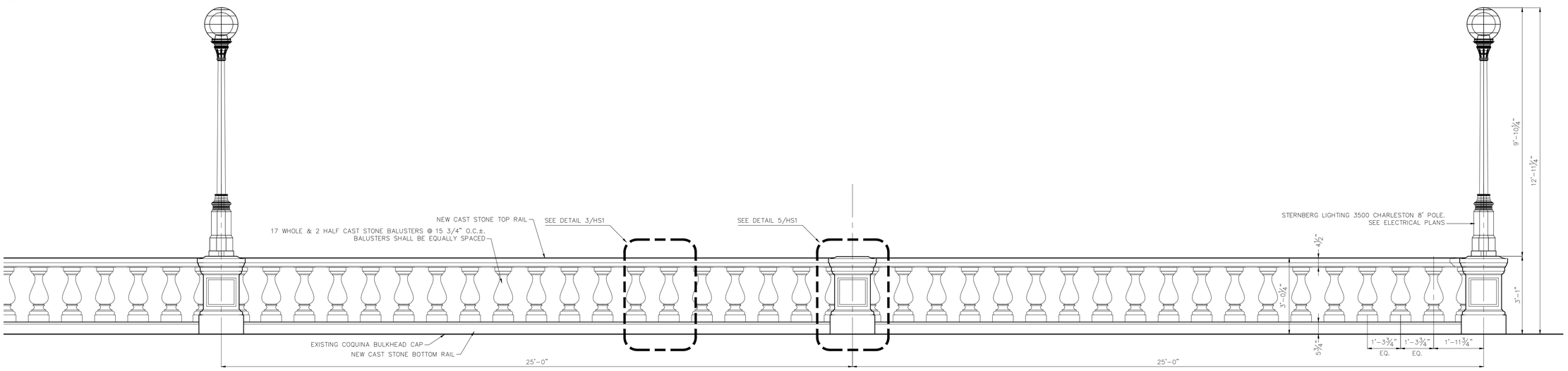

2 HS1 TYPICAL BALUSTRADE ELEVATION
SCALE: 1/2" = 1'-0"

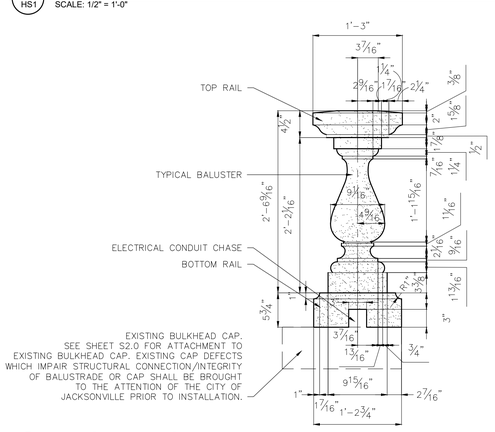

3 HS1 TYPICAL BALUSTRADE DETAIL
SCALE: 1" = 1'-0"

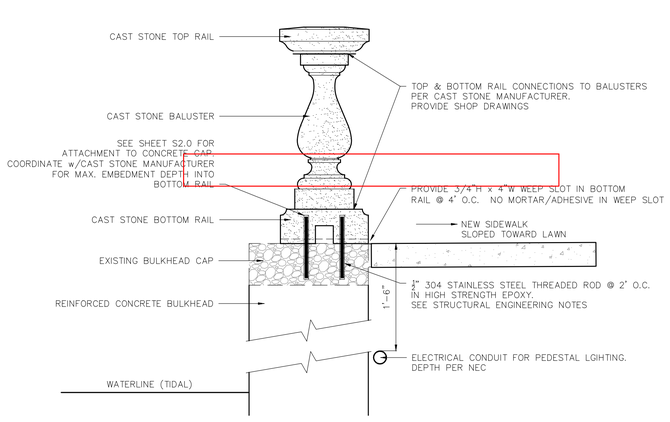

4 HS1 TYPICAL BALUSTRADE SECTION
SCALE: 1" = 1'-0"

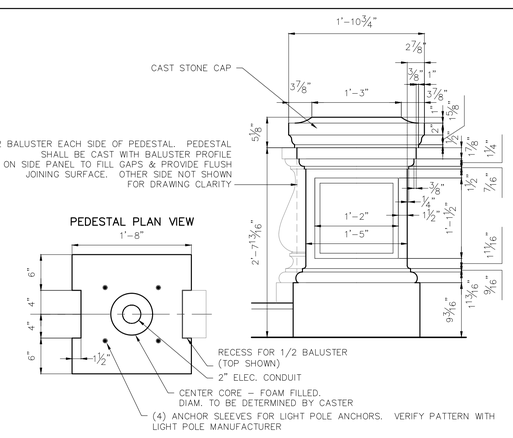

5 HS1 TYPICAL PEDESTAL DETAIL
SCALE: 1" = 1'-0"

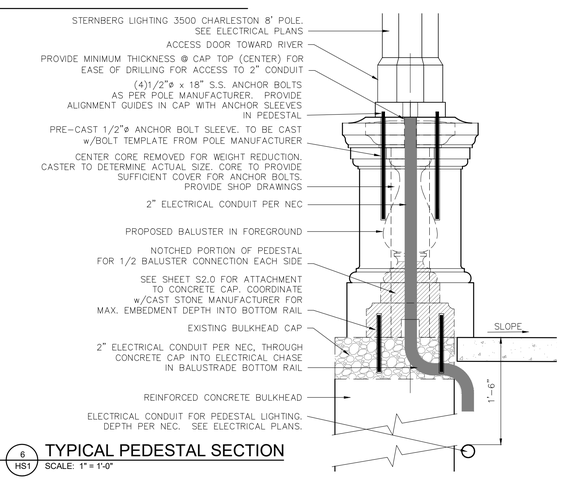

6 HS1 TYPICAL PEDESTAL SECTION
SCALE: 1" = 1'-0"

GODARDESIGN ASSOCIATES, INC.
LANDSCAPE ARCHITECTURE / LAND PLANNING
541 Oleander Street, Neptune Beach, FL 32266
Phone: (904) 247-7729 Fax: (904) 373-9177
www.godarddesign.com LC 0000397

DEMOLITION NOTES:

1. Existing elements that are to be removed shall become the property of the Contractor, unless otherwise noted. All elements to be removed shall be handled and disposed of off site as required by local, State, and Federal codes or laws, including the monitoring and protection of workers and the public during construction operations.

2. Any damage to landscaping, lighting, structures, irrigation, or architectural features shall be repaired/replaced as-is at no cost to the City.

3. Existing mortar and/or adhesive shall be removed from existing cast stone pieces to be re-used, and damage to these pieces shall be repaired to match existing intact cast stone. Contractor shall immediately advise the Client and its Representative of damage to proposed re-use pieces which cannot be mitigated, and which will require replacement with new.

WORK AREA

1. Contractor shall advise City and Client of the work area necessary to complete this scope, including loading/unloading areas, and said areas shall be separated from the public by placement of existing barricades along the public sidewalk.

2. Signs shall be posted notifying the public of the work area, and prohibiting entry into such areas.

GENERAL NOTES:

1. All work to be in accordance with City of Jacksonville and FEMA requirements.

2. Contractor shall be responsible for all permits and compliance with local & federal requirements.

3. Dimensions of cast stone pieces are provided as reference information. Existing pieces shall serve as templates for all new castings.

4. Existing bulkhead cap shall be assessed for structural integrity by a licensed structural engineer prior to initiation of work. Cap conditions, including, but not limited to, cracks, spalling, rust, loose connections to bulkhead, or any other impediment to construction, which would compromise the ability of the cap to support the replacement balustrade shall be brought to the immediate attention of the City of Jacksonville project representative. Notice shall be copied to the Project Landscape Architect and the Memorial Park Association Construction Committee.

MEMORIAL PARK REHABILITATION

for Memorial Park Association and the City of Jacksonville

Jacksonville, Florida

Rev.	Date	Comment
1	-	-
2	-	-
3	-	-
4	-	-
5	-	-

HS1-HS3 ONLY

Date:	7/27/18
Scale:	Noted
Drawn by:	BMG
Checked by:	BMG
Project No.	17-134

Sheet Title:
POST-IRMA BALUSTRADE REPAIR

Sheet No.
HS1 Of 3

©2019, Godard Design Associates, Inc. These drawings are protected by the copyright laws of the United States. These drawings or any part thereof may not be used for any purpose or reproduced in any form or by any means without the written consent of Godard Design Associates, Inc.

Docusign Envelope ID: 127460E9-814A-4E80-A0A5-49A9B4B0BC73

EXHIBIT C-1

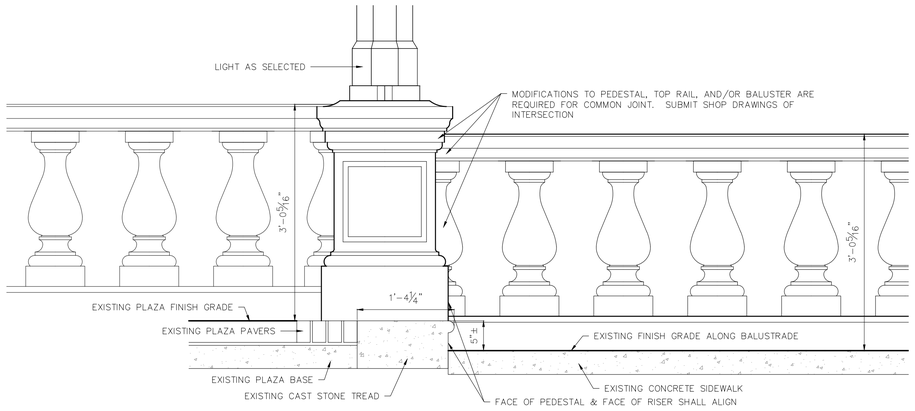

1 HS2 TYPICAL CONDITION @ PLAZA STEPS
SCALE: 1" = 1'-0"

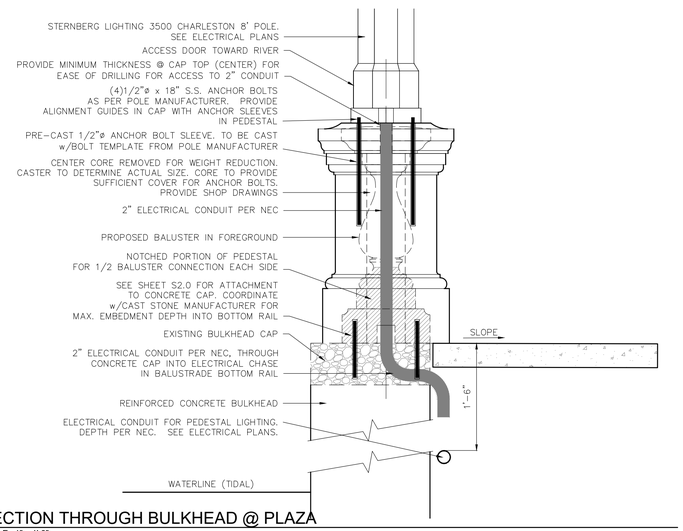

2 HS2 SECTION THROUGH BULKHEAD @ PLAZA
SCALE: 1" = 1'-0"

Part 1 General

1.1. Section Includes - Architectural Cast Stone.

Scope - Cast Stone shown on architectural drawings and as described in this specification.

- Manufacturer shall furnish Cast Stone covered by this specification.

1.2. References

ACI 318 - Building Code Requirements for Reinforced Concrete.

ASTM A 185 - Standard Specification for Steel Welded Wire Reinforcement, Plain, for Concrete.

ASTM A 615/A 615M - Standard Specification for Deformed and Plain Billet-Steel Bars for Reinforced Concrete.

ASTM C 33 - Standard Specification for Concrete Aggregates.

ASTM C 150 - Standard Specification for Portland Cement.

ASTM C 595 - Blended Cement

ASTM C 1157 - Hydraulic Cement

ASTM C 173 - Standard Test Method for Air Content of Freshly Mixed Concrete by the Volume Method.

ASTM C 231 - Standard Test Method for Air Content of Freshly Mixed Concrete by the Pressure Method.

ASTM C 260 - Standard Specification for Air-Entrained Admixtures for Concrete.

ASTM C 270 - Standard Specification for Mortar for Unit Masonry.

ASTM C 426 - Standard Test Method for Linear Shrinkage of Concrete Masonry Units.

ASTM C 494/C 494M - Standard Specification for Chemical Admixtures for Concrete.

ASTM C 618 - Specification for Coal Fly Ash and Raw or Calcined Natural Pozzolan for Use as a Mineral Admixture in Concrete.

ASTM C 666 - Standard Test Method for Resistance of Concrete to Rapid Freezing and Thawing.

ASTM C 979 - Standard Specification for Coloring Pigments for Integrally Pigmented Concrete.

ASTM C 989 - Standard Specification for Ground Granulated Blast-Furnace Slag for Use in Concrete.

ASTM C 1116 - Standard Specification for Fiber Reinforced Concrete and Shotcrete.

ASTM C 1194 - Standard Test Method for Compressive Strength of Architectural Cast Stone.

ASTM C 1195 - Standard Test Method for Absorption of Architectural Cast Stone.

ASTM C 1364 - Standard Specification for Architectural Cast Stone.

ASTM D 2244 - Standard Test Method for Calculation of Color Differences from Instrumentally Measured Color Coordinates.

Cast Stone Institute® Technical Manual (Current Edition)

1.3. Definitions

Cast Stone - a refined architectural concrete building unit manufactured to simulate natural cut stone, used in Division 4 masonry applications.

- Dry Cast - manufactured from zero slump concrete.

  Vibrant Dry Tamp (VDT) casting method: Vibratory ramming of earth moist, zero-slump concrete against a rigid mold until it is densely compacted.

  Machine casting method: Manufactured from earth moist, zero-slump concrete compacted by machinery using vibration and pressure against a mold until it becomes densely consolidated.

- Wet Cast - Manufactured from measurable slump concrete.

  Wet casting method: Manufactured from measurable slump concrete and vibrated into a mold until it becomes densely consolidated.

- Specifier Note: Slump, manufacturing method, and apparatus shall be selected by the manufacturer and not specified by the purchaser.

1.4. Submittal Procedures

Samples: Submit pieces of the Cast Stone that are representative of the general range of finish and color proposed to be furnished for the project. Samples and finished product shall match in texture and color existing cast stone pieces after cleaning of originals.

Test results: Submit manufacturers test results of Cast Stone previously made by the manufacturer.

Shop Drawings: Submit manufacturers shop drawings including profiles, cross-sections, reinforcement, exposed faces, arrangement of joints (optional for standard or semi-custom installations), anchoring methods, anchors (if required), annotation of stone types and their location.

Warranty: Submit Cast Stone Institute® Member Limited Warranty.

Certification: Submit valid Cast Stone Institute® Plant Certification.

1.5. Quality Assurance

Manufacturer Qualifications:

- Cast Stone shall be produced in a plant certified by the Cast Stone Institute®.
- Manufacturer shall have sufficient plant facilities to produce the shapes, quantities and size of Cast Stone required in accordance with the project schedule.
- Manufacturer shall submit a written list of projects similar in scope and at least three (3) years of age, along with owner, architect and contractor references.
- Manufacturer shall have provided cast stone products of similar scope for historically significant projects

Standards: Comply with the requirements of the Cast Stone Institute® Technical Manual and the project specifications. Where a conflict may occur, the contract documents shall prevail.

Mock-up (Optional) Provide full size unit(s) for use in construction of sample wall. The approved mock-up shall become the standard for appearance and workmanship for the project.

Warranty Period: 10 years.

Part 2 Products

2.1. Architectural Cast Stone - Vibrant Dry Tamp Method

Comply with ASTM C 1364

Physical properties: Provide the following:

- Compressive Strength - ASTM C 1194: 8,500 psi minimum for products at 28 days.
- Absorption - ASTM C 1195: 6.0% maximum by the cold water method.
- Air Content - ASTM C 173 or C 231, for wet cast product shall be 4.0-8.0% for units exposed to freeze-thaw environments. Air entrainment is not required for Vibrant Dry Tamp (VDT) products.
- Freeze-thaw - ASTM C 1364: The CPWL shall be less than 5.0% after 300 cycles of freezing and thawing.
- Linear Drying Shrinkage - ASTM C 426: Test and report in accordance with ASTM C1364.

Job site testing - One sample from production units may be selected at random from the field for each 500 cubic feet delivered to the job site.

- Three field cut cube specimens from each of these samples shall have an average minimum compressive strength of not less than 85% with no single specimen testing less than 75% of design strength as allowed by ACI 318.
- Three field cut cube specimens from each of these samples shall have an average maximum cold-water absorption of 6.0%.
- Field specimens shall be tested in accordance with ASTM C 1194 and C 1195.

2.2. Raw Materials

Portland cement - Type I or Type III, white, ASTM C 150.

Coarse aggregates - Granite, quartz or limestone, ASTM C 33, except for gradation, and are optional for the Vibrant Dry Tamp (VDT) casting method.

Fine aggregates - Manufactured or natural sands, ASTM C 33, except for gradation.

Colors - Inorganic iron oxide pigments, ASTM C 979 except that carbon black pigments shall not be used.

Admixtures- Comply with the following:

- ASTM C 260 for air-entraining admixtures.
- ASTM C 494/C 495M Types A - G for water reducing, retarding, accelerating and high range admixtures.
- Other admixtures: Integral water repellents and other chemicals, for which no ASTM Standard exists, shall be previously established as suitable for use in concrete by proven field performance or through laboratory testing.
- ASTM C 618 mineral admixtures of dark and variable colors shall not be used in surfaces intended to be exposed to view.
- ASTM C 989 granulated blast furnace slag may be used to improve physical properties. Tests are required to verify these features.

Water - Potable

Reinforcing bars:

- ASTM C 1116: Fiberglass reinforced polymer rebar.
- Welded Wire Fabric: ASTM A 185 where applicable for wet cast units.

All anchors, dowels and other anchoring devices and shims shall be standard building stone anchors commercially available in a non-corrosive material such as zinc plated, galvanized steel, brass, or stainless steel Type 302 or 304.

2.3. Color and Finish

Match existing pieces on site or held by City. Existing pieces to be matched shall be clean prior to color/finish match.

All surfaces intended to be exposed to view shall have a fine-grained texture similar to natural stone, with no air voids in excess of 1/32 in. and the density of such voids shall be less than 3 occurrences per any 1 in.2 and not obvious under direct daylight illumination at a 5 ft distance.

Units shall exhibit a texture approximately equal to the approved sample when viewed under direct daylight illumination at a 10 ft distance.

- ASTM D 2244 permissible variation in color between units of comparable age subjected to similar weathering exposure.
- Total color difference - not greater than 6 units.
- Total hue difference - not greater than 2 units.

Minor chipping resulting from shipment and delivery shall not be grounds for rejection. Minor chips shall not be obvious under direct daylight illumination from a 20-ft distance.

Remove cement film, if required, from exposed surfaces prior to packaging for shipment.

2.4. Reinforcing

Reinforce the units as required by the drawings and for safe handling and structural stress.

Minimum reinforcing shall be 0.25 percent of the cross section area.

Reinforcement shall be. All reinforcement shall have minimum coverage of twice the diameter of the bars.

Units greater than 24 in. (600 mm) in one direction shall be reinforced in that direction. Units less than 24 in. (600 mm) in both their length and width dimension shall be non-reinforced unless otherwise specified.

Welded wire fabric reinforcing shall not be used in dry cast products.

2.5. Curing

Cure units in a warm curing chamber approximately 100ºF (37.8ºC) at 95 percent relative humidity for approximately 12 hours, or cure in a 95 percent moist environment at a minimum 70ºF (21.1ºC) for 16 hours after casting. Additional yard curing at 95 percent relative humidity shall be 350 degree-days (i.e. 7 days @ 50ºF (10ºC) or 5 days @ 70ºF (21ºC) prior to shipping. Form cured units shall be protected from moisture evaporation with curing blankets or curing compounds after casting.

2.6. Manufacturing Tolerances

Cross section dimensions shall not deviate by more than ±1/8 in. from approved dimensions.

Length of units shall not deviate by more than length/ 360 or ±1/8 in., whichever is greater, not to exceed ±1/4 in.

- Maximum length of any unit shall not exceed 15 times the average thickness of such unit unless otherwise agreed by the manufacturer.

Warp, bow or twist of units shall not exceed length/ 360 or ±1/8 in., whichever is greater.

Location of dowel holes, anchor slots, flashing grooves, false joints and similar features - On formed sides of unit, 1/8 in., on unformed sides of unit, 3/8 in. maximum deviation.

2.7. Production Quality Control

Testing.

- Test compressive strength and absorption from specimens taken from every 500 cubic feet of product produced.
- Perform tests in accordance ASTM C 1194 and C 1195
- Have tests performed by an independent testing laboratory every six months.
- New and existing mix designs shall be tested for strength and absorption compliance prior to producing units.
- Retain copies of all test reports for a minimum of two years.

2.8. Delivery, Storage and Handling

Mark production units with the identification marks as shown on the shop drawings.

Package units and protect them from staining or damage during shipping and storage.

Provide an itemized list of product to support the bill of lading.

3. Part 3 Execution

3.1. Examination

Installing contractor shall check Cast Stone materials for fit and finish prior to installation.

Do not set unacceptable units.

3.2. Setting Tolerances

Comply with Cast Stone Institute® Technical Manual.

Set stones 1/8 in. or less, within the plane of adjacent units.

Joints, plus - 1/16 in., minus - 1/8 in.

3.3. Jointing

Joint size:

- At stone/brick joints 3/8 in.
- At stone/stone joints in vertical position 1/4 in. (3/8 in. optional).
- Stone/stone joints exposed on top 3/8 in.

Joint materials:

- Mortar, Type N, ASTM C 270.
- Use a full bed of mortar at all bed joints.

  Flush vertical joints full with mortar.
- Leave all joints with exposed tops or under relieving angles open for sealant.
- Leave head joints in copings and projecting components open for sealant.

Location of joints:

- As shown on shop drawings.
- At control and expansion joints unless otherwise shown.

3.4. Setting

Wet units with clean water prior to setting.

All pieces shall be level and plumb in all directions, except where existing base material is not level.

Fill dowel holes and anchor slots completely with mortar or non-shrink grout.

Set units in full bed of mortar, unless otherwise detailed.

Rake mortar joints 3/4 in. in for pointing.

Remove excess mortar from unit faces immediately after setting.

Tuck point unit joints to a slight concave profile.

3.5. Joint Protection

Comply with requirements of Section 07 90 00.

Prime ends of units, insert properly sized backing rod and install required sealant.

3.6. Repair and Cleaning

Repair chips with touchup materials furnished by manufacturer.

Saturate units to be cleaned prior to applying an approved masonry cleaner.

Consult with manufacturer for appropriate cleaners

GODARDESIGN ASSOCIATES, INC.
LANDSCAPE ARCHITECTURE / LAND PLANNING
541 Oleander Street, Neptune Beach, FL 32266
Phone: (904) 247-7729 Fax: (904) 373-9177
www.godarddesign.com LC 0000397

DEMOLITION NOTES:

1. Existing elements that are to be removed shall become the property of the Contractor, unless otherwise noted. All elements to be removed shall be handles and disposed of off site as required local, State, and Federal codes or laws, including the monitoring and protection of workers and the public during construction operations.

2. Any damage to landscaping, lighting, structures, irrigation, or architectural features shall be repaired/replaced as-is at no cost to the City.

3. Existing mortar and/or adhesive shall be removed from existing cast stone pieces to be re-used, and damage to these pieces shall be repaired to match existing intact cast stone. Contractor shall immediately advise the Client and its Representative of damage to proposed re-use pieces which cannot be mitigated, and which will require replacement with new.

WORK AREA

1. Contractor shall advise City and Client of the work area necessary to complete this scope, including loading/unloading areas, and said areas shall be separated from the public by placement of existing barricades along the public sidewalk.

2. Signs shall be posted notifying the public of the work area, and prohibiting entry into such areas.

GENERAL NOTES:

1. All work to be in accordance with City of Jacksonville and FEMA requirements.

2. Contractor shall be responsible for all permits and compliance with local & federal requirements.

3. Dimensions of cast stone pieces are provided as reference information. Existing pieces shall serve as templates for all new castings.

4. Existing bulkhead cap shall be assessed for structural integrity by a licensed structural engineer prior to initiation of work. Cap conditions, including, but not limited to, cracks, spalling, rust, loose connections to bulkhead, or any other impediment to construction, which would compromise the ability of the cap to support the replacement balustrade shall be brought to the immediate attention of the City of Jacksonville project representative. Notice shall be copied to the Project Landscape Architect and the Memorial Park Association Construction Committee.

MEMORIAL PARK
REHABILITATION
for Memorial Park Association
and the City of Jacksonville
Jacksonville, Florida

Rev.	Date	Comment
1	-	-
2	-	-
3	-	-
4	-	-
5	-	-

Date:	7/27/18
Scale:	Noted
Drawn by:	BMG
Checked by:	BMG
Project No.	17-134

Sheet Title:
POST-IRMA
BALUSTRADE REPAIR
Sheet No.
HS2 Of 3

©2019, Godard Design Associates, Inc. These drawings are protected by the copyright laws of the United States. These drawings or any part thereof may not be used for any purpose or reproduced in any form or by any means without the written consent of Godard Design Associates, Inc.

Docusign Envelope ID: 127460E9-814A-4E80-A0A5-49A9B4B0BC73

EXHIBIT C-1

SECTION 013591 - HISTORIC TREATMENT PROCEDURES

PART 1 - GENERAL RELATED DOCUMENTS

A. Drawings and general provisions of the Contract, including General and Supplementary Conditions and other Division 01 Specification Sections, apply to this Section.

1.2 SUMMARY

A. This Section includes special procedures for historic treatment on Project including, but not limited to, the following:

1. Storage and protection of existing historic materials.
2. Temporary protection of historic materials during construction.
3. Protection during application of chemicals.
4. Protection during use of heat-generating equipment.
5. Historic treatment procedures.
6. Removal of bird excrement.

1.3 DEFINITIONS

A. "Preservation": To apply measures necessary to sustain the existing form, integrity, and materials of a historic property. Work may include preliminary measures to protect and stabilize the property.

B. "Rehabilitation": To make possible a compatible use for a property through repair, alterations, and additions while preserving those portions or features that convey its historical, cultural, or architectural values.

C. "Restoration": To accurately depict the form, features, and character of a property as it appeared at a particular period of time by means of the removal of features from other periods in its history and the reconstruction of missing features from the restoration period.

D. "Reconstruction": To reproduce in the exact form and detail a building, structure, or artifact as it appeared at a specific period in time.

A.

E. "Stabilize": To apply measures designed to reestablish a weather-resistant enclosure and the structural reinforcement of an item or portion of the building while maintaining the essential form as it exists at present.

F. "Protect and Maintain": To remove deteriorating corrosion, re-apply protective coatings, and install protective measures such as temporary guards; to provide the least degree of intervention.

G. "Repair": To stabilize, consolidate, or conserve; to retain existing materials and features while employing as little new material as possible. Repair includes patching, piecing-in, splicing, consolidating, or otherwise reinforcing or upgrading materials. Within restoration, repair also includes limited replacement in kind, rehabilitation, and reconstruction, with compatible substitute materials for deteriorated or missing parts of features when there are surviving prototypes.

H. "Replace": To duplicate and replace entire features with new material in kind. Replacement includes the following conditions:

1. Duplication: Includes replacing elements damaged beyond repair or missing. Original material is indicated as the pattern for creating new duplicated elements.
2. Replacement with New Materials: Includes replacement with new material when original material is not available as patterns for creating new duplicated elements.
3. Replacement with Substitute Materials: Includes replacement with compatible substitute materials. Substitute materials are not allowed, unless otherwise indicated.

I. "Remove": To detach items from existing construction and legally dispose of them off-site unless indicated to be removed and salvaged or removed and reinstalled.

J. "Remove and Salvage": To detach items from existing construction and deliver them to Owner ready for reuse.

K. "Remove and Reinstall": To detach items from existing construction, repair and clean them for reuse, and reinstall them where indicated.

L. "Existing to Remain" or "Retain": Existing items of construction that are not to be removed and that are not otherwise indicated to be removed and salvaged, or removed and reinstalled.

M. "Material in Kind": Material that matches existing materials, as much as possible, in species, cut, color, grain, and finish.

1.4 SUBMITTALS

A. Historic Treatment Program: Submit a written plan for each phase or process including protection of surrounding materials during operations. Describe in detail materials, methods, and equipment to be used for each phase of work.

1.2

1. Alternative Methods and Materials: If alternative methods and materials to those indicated are proposed for any phase of work, provide a written description including evidence of successful use on other, comparable projects, and program of testing to demonstrate effectiveness for use on this Project.
2. Qualification Data: For historic treatment specialists and supervisory personnel. Include list of completed projects with the scope of work and budget for each.
3. Photographs or Videotape: Show existing conditions of adjoining construction and site improvements, including finish surfaces that might be misconstrued as damage caused by historic treatment operations. Submit before work begins.
4. Record Documents: Include modifications to manufacturer's written instructions and procedures, as documented in the historic treatment preconstruction conference and as the Work progresses.

1.5 QUALITY ASSURANCE

A. Historic Treatment Specialist Qualifications: A firm that employs personnel, including supervisory personnel, experienced and skilled in the processes and operations indicated.

1. Historic Treatment Preconstruction Conference: Conduct conference at Project site to comply with requirements in Division 01 Section "Project Management and Coordination."
2. Review manufacturer's written instructions for precautions and effects of products and procedures on building materials, components, and vegetation.
3. Record procedures established as a result of the review and distribute to affected parties.

B. PROTECTION OF HISTORIC MATERIALS

1. Do not dispose of items removed from existing construction without prior written consent of Owner.
2. Existing Historic Materials to Remain: Protect construction indicated to remain against damage and soiling during new construction. When permitted by Architect, items may be removed to a suitable, protected storage location during new construction and cleaned and reinstalled in their original locations after construction operations are complete.
   a. Storage and Protection: When removed from their existing location, store historic materials within a weather tight enclosure where they are protected from wetting by rain, snow, or groundwater, and temperature variations. Secure stored materials to protect from theft.
   b. Identify removed items with an inconspicuous mark indicating their original location.
   c. Existing items included under this section may include, but are not limited to, marble benches, trash receptacles, signage, cast stone treads, fountain & Life sculpture, balustrade & bronze eagle pieces near large grass oval.

1.6 PROJECT-SITE CONDITIONS

A. EXTERIOR CLEANING AND REPAIRING

1. Proceed with the work only when forecasted weather conditions are favorable.
2. Perform cleaning and rinsing of the exterior only during daylight hours.

1.7 EXECUTION

A. PROTECTION, GENERAL

1. Comply with manufacturer's written instructions for precautions and effects of products and procedures on adjacent building materials, components, and vegetation.
2. Ensure that supervisory personnel are present when work begins and during its progress.
3. Temporary Protection of Historic Materials during Construction:
4. Protect existing materials during installation of temporary protections and construction. Do not deface or remove existing materials.
5. Attachments of temporary protection to existing construction shall be approved by Architect prior to installation.
6. Protect landscape work adjacent to or within work areas as follows:
7. Provide barriers to protect tree trunks.
8. Bind spreading shrubs.
9. Use coverings that allow plants to breathe and remove coverings at the end of each day. Do not cover plant material with a waterproof membrane for more than 8 hours at a time.
10. Set scaffolding and ladder legs away from plants.
11. Existing Drains: Prior to the start of work or any cleaning operations, test drains and other water removal systems to ensure that drains and systems are functioning properly. Notify Architect or owner's agent immediately of drains or systems that are stopped or blocked. Do not begin Work of this Section until the drains are in working order.
12. Provide a method to prevent solids including stone or mortar residue from entering the drains or drain lines. Clean out drains and drain lines that become blocked or filled by sand or any other solids because of work performed under this Contract.
13. Protect storm drains from pollutants. Block drains or filter out sediments, allowing only clean water to pass.

1. B. PROTECTION DURING APPLICATION OF CHEMICALS

1. Protect persons, motor vehicles, surrounding surfaces of building being restored, building site, plants, and surrounding buildings from harm or damage resulting from applications of chemical cleaners and paint removers.
2. Cover adjacent surfaces with materials that are proven to resist chemical cleaners selected for Project unless chemicals being used will not damage adjacent surfaces. Use covering materials that contain only waterproof, UV-resistant adhesives. Apply masking agents to comply with manufacturer's written instructions. Do not apply liquid masking agent to painted or porous surfaces. When no longer needed, promptly remove masking to prevent adhesive staining.
3. Do not clean surfaces during winds of sufficient force to spread cleaning solutions to unprotected surfaces.
4. Neutralize and collect alkaline and acid wastes and dispose of off Owner's property.
5. Dispose of runoff from chemical operations by legal means and in a manner that prevents soil erosion, undermining of paving and foundations, damage to landscaping, and water penetration into building interiors.

C. PROTECTION DURING USE OF HEAT-GENERATING EQUIPMENT

1. Comply with the following procedures while performing work with heat-generating equipment, including welding, cutting, soldering, brazing, paint removal with heat, and other operations where open flames or implements utilizing heat are used:
2. Obtain Owner's approval for operations involving use of open-flame or welding equipment.
3. Notification shall be given for each occurrence and location of work with heat-generating equipment.
4. As far as practical, use heat-generating equipment in shop areas or outside the building.
1. a. Before work with heat-generating equipment commences, furnish personnel to serve as a fire watch (or watches) for location(s) where work is to be performed.
   i. Do not perform work with heat-generating equipment in or near rooms or in areas where flammable liquids or explosive vapors are present or thought to be present. Use a combustible gas indicator test to ensure that the area is safe.
   j. Remove and keep the area free of combustibles, including, rubbish, paper, waste, etc., within area of operations.
   k. If combustible material cannot be removed, provide fireproof blankets to cover such materials.
   l. Where possible, furnish and use baffles of metal or gypsum board to prevent the spraying of sparks or hot slag into surrounding combustible material.
   m. Prevent the extension of sparks and particles of hot metal through open windows, doors, holes, and cracks in floors, walls, ceilings, roofs, and other openings.
   n. Inspect each location of the day's work not sooner than 30 minutes after completion of operations to detect hidden or smoldering fires and to ensure that proper housekeeping is maintained.
   o. Where sprinkler protection exists and is functional, maintain it without interruption while operations are being performed. If operations are performed close to automatic sprinkler heads, shield the individual heads temporarily with guards.

1.8 HISTORIC TREATMENT PROCEDURES

A. The principal aim of preservation work is to halt the process of deterioration and stabilize the item's condition, unless otherwise indicated. Repair is required where specifically indicated. The following procedures shall be followed:
B. Retain as much existing material as possible; repair and consolidate rather than replace.
C. Use additional material or structure to reinforce, strengthen, prop, tie, and support existing material or structure.
D. Use reversible processes wherever possible.
E. Use traditional replacement materials and techniques. New work shall be distinguishable to the trained eye, on close inspection, from old work.
F. Record the work before the procedure with pre-construction photos and during the work with periodic construction photos.
G. Prohibit smoking by personnel performing work on or near historic structures.

A.

1. Obtain Architect's review and written approval in the form of a Constructive Change Directive or Supplemental Instruction before making changes or additions to construction or removing historic materials.
2. Notify Architect of visible changes in the integrity of material or components whether due to environmental causes including biological attack, UV degradation, freezing, or thawing; or due to structural defects including cracks, movement, or distortion.
3. Do not proceed with the work in question until directed by Architect or Owner's rep.
4. Where missing features are indicated to be repaired or replaced, provide features whose designs are based on accurate duplications rather than on conjectural designs, subject to the approval of Architect and Preservation Specialist.
5. Where Work requires existing features to be removed, cleaned, and reused, perform these operations without damage to the material itself, to adjacent materials, or to the substrate.
6. Identify new or replacement materials and features with inconspicuous, permanent marks to distinguish them from original materials. Record the legend of identification marks and the locations of these marks on Record Drawings.
7. When cleaning, match samples of existing materials that have been cleaned and identified for acceptable cleaning levels. Avoid over-cleaning to prevent damage to existing materials during cleaning.

END OF SECTION 013591

GODARDESIGN ASSOCIATES, INC.
LANDSCAPE ARCHITECTURE / LAND PLANNING
541 Oleander Street, Neptune Beach, FL 32266
Phone: (904) 247-7729 Fax: (904) 373-9177
www.godarddesign.com LC 0000397

DEMOLITION NOTES:

1. Existing elements that are to be removed shall become the property of the Contractor, unless otherwise noted. All elements to be removed shall be handles and disposed of off site as required local, State, and Federal codes or laws, including the monitoring and protection of workers and the public during construction operations.

2. Any damage to landscaping, lighting, structures, irrigation, or architectural features shall be repaired/replaced as-is at no cost to the City.

3. Existing mortar and/or adhesive shall be removed from existing cast stone pieces to be re-used, and damage to these pieces shall be repaired to match existing intact cast stone. Contractor shall immediately advise the Client and its Representative of damage to proposed re-use pieces which cannot be mitigated, and which will require replacement with new.

WORK AREA

1. Contractor shall advise City and Client of the work area necessary to complete this scope, including loading/unloading areas, and said areas shall be separated from the public by placement of existing barricades along the public sidewalk.

2. Signs shall be posted notifying the public of the work area, and prohibiting entry into such areas.

GENERAL NOTES:

1. All work to be in accordance with City of Jacksonville and FEMA requirements.

2. Contractor shall be responsible for all permits and compliance with local & federal requirements.

3. Dimensions of cast stone pieces are provided as reference information. Existing pieces shall serve as templates for all new castings.

4. Existing bulkhead cap shall be assessed for structural integrity by a licensed structural engineer prior to initiation of work. Cap conditions, including, but not limited to, cracks, spalling, rust, loose connections to bulkhead, or any other impediment to construction, which would compromise the ability of the cap to support the replacement balustrade shall be brought to the immediate attention of the City of Jacksonville project representative. Notice shall be copied to the Project Landscape Architect and the Memorial Park Association Construction Committee.

MEMORIAL PARK REHABILITATION

for Memorial Park Association and the City of Jacksonville

Jacksonville, Florida

Rev.	Date	Comment
1	-	-
2	-	-
3	-	-
4	-	-
5	-	-

Date:	7/27/18
Scale:	Noted
Drawn by:	BMG
Checked by:	BMG
Project No.	17-134

Sheet Title:

POST-IRMA BALUSTRADE REPAIR

Sheet No.

HS3 Of 3

©2019, Godard Design Associates, Inc. These drawings are protected by the copyright laws of the United States. These drawings or any part thereof may not be used for any purpose or reproduced in any form or by any means without the written consent of Godard Design Associates, Inc.

Docusign Envelope ID: 127460E9-814A-4E80-A0A5-49A9B4B0BC73

EXHIBIT C-1

ELECTRICAL LEGEND

P1–1 — LIGHTING POLE WITH POST TOP FIXTURE

PANELBOARD

ELECTRICAL METER

CONDUIT RUN EXPOSED

CONDUIT RUN CONCEALED, OR UNDERGROUND

DEMOLITION TAGS

THE FOLLOWING ARE USED IN CONJUNCTION WITH DEVICES:

- EX — EXISTING SHALL REMAIN
- ER — EXISTING SHALL BE REMOVED
- EN — EXISTING SHALL BE REPLACED WITH NEW DEVICE
- EXR — EXISTING SHALL BE RELOCATED TO NEW LOCATION
- ERP — EXISTING IN RELOCATED POSITION

EXISTING ITEMS NOT SHOWN SHALL REMAIN AS IS.

ABBREVIATIONS

AB	ABOVE	EX	EXISTING	STR	STARTER
AC	ABOVE COUNTER	EPB	ELECTRICAL PULL BOX	T	TOP
AFF	ABOVE FINISHED FLOOR	EWC	ELECTRIC WATER COOLER	TBD	TO BE DETERMINED
AFI	ARC–FAULT INTERRUPTER	EWH	ELECTRIC WATER HEATER	UNO	UNLESS NOTED OTHERWISE
AFG	ABOVE FINISHED GRADE	FAAP	FIRE ALARM ANNUNCIATOR PANEL	WP	WEATHERPROOF
AIC	AMPERE INTERRUPTING CAPACITY	FACP	FIRE ALARM CONTROL PANEL	XFMR	TRANSFORMER
ATM	AUTOMATIC TELLER MACHINE	GFI	GROUND FAULT INTERRUPTER		
B	BOTTOM	GND	GROUND		
BKR	BREAKER	IT	INFORMATION TECHNOLOGY		
C	CONDUIT	KWHM	KILOWATT HOUR METER		
CKT	CIRCUIT	LV	LOW VOLTAGE		
CL	CENTER LINE	MH	MOUNTING HEIGHT		
CLG	CEILING HEIGHT	NEC	PER LATEST NATIONAL ELECTRICAL CODE		

811
Call 48 hours before you dig
It's the Law!
811 or 800–432–4770
Sunshine State One Call of Florida, Inc.

GENERAL ELECTRICAL NOTES

1. ALL ELECTRICAL WORK SHALL COMPLY WITH NATIONAL ELECTRICAL CODE, THE NATIONAL FIRE CODES, AND LOCAL BUILDING CODES, LATEST EDITIONS.
2. THE CONTRACTOR SHALL VISIT THE SITE TO DETERMINE EXISTING CONDITIONS PRIOR TO SUBMITTING BID.
3. THE CONTRACTOR SHALL THOROUGHLY REVIEW THE PROJECT TO ENSURE THAT ALL WORK SHALL MEET OR EXCEED THE ABOVE REQUIREMENTS. ANY ALLEGED DISCREPANCIES SHALL BE BROUGHT TO THE ENGINEER'S ATTENTION.
4. THE CONTRACTOR IS DIRECTED TO OBTAIN COPIES OF ALL RELATED PLANS, SPECIFICATIONS, SHOP DRAWINGS AND ADDENDUMS TO COORDINATE THE RELATED WORK AND SCHEDULING.
5. THE CONTRACTOR SHALL THOROUGHLY REVIEW THE ARCHITECTURAL PLANS TO ASSURE THAT ELECTRICAL SERVICE FOR ALL ITEMS AND/OR EQUIPMENT REQUIRING ELECTRICAL SERVICE IS INCLUDED. ANY ITEM AND/OR EQUIPMENT NOT PROVIDED WITH ELECTRICAL SERVICE, REQUIRING ELECTRICAL SERVICE, SHALL BE BROUGHT TO THE ENGINEER'S ATTENTION.
6. MINIMUM TRADE SIZE FOR CONDUIT PERMITTED SHALL BE 3/4 INCH UNLESS NOTED OTHERWISE.
7. ALL CONDUCTOR SHALL BE COPPER WITH 600 VOLT INSULATION TYPE THHN OR THWN (MINIMUM SIZE SHALL BE #12AWG). CONTRACTOR SHALL ADJUST WIRE AND CONDUIT SIZES IF OTHER INSULATION TYPES ARE USED.
8. ALL ELECTRICAL WIRING DEVICES INDICATED TO BE INSTALLED IN MASONRY WALLS SHALL BE FLUSH MOUNTED, UNLESS OTHERWISE NOTED. THE CONDUITS TO ASSOCIATED ELECTRICAL EQUIPMENT SHALL BE CONCEALED IN WALLS OR FLOOR.
9. ALL ELECTRICAL EQUIPMENT MOUNTED INDOORS SHALL BE IN NEMA 1 ENCLOSURE. ALL EQUIPMENT MOUNTED OUTDOORS SHALL BE IN NEMA 3R ENCLOSURE. UNLESS OTHERWISE NOTED.
10. ALL CONDUIT RUNS SHALL BE CONCEALED UNLESS SPECIFICALLY NOTED OTHERWISE.
11. ALL SPECIAL PURPOSE OUTLETS SHALL BE PROVIDED TO MATCH EQUIPMENT TO BE SUPPLIED.
12. THE PLANS INDICATE THE DESIRED ARRANGEMENT AND GENERAL LOCATIONS OF LIGHT FIXTURES. THE ARCHITECTURAL PLANS INDICATE ADDITIONAL DATA AS TO THE FINAL FIXTURE PLACEMENT.
13. ANY EXISTING UTILITIES LOCATED IN THE AREA OF CONSTRUCTION WHICH REQUIRE RELOCATION BY THE OWNER SHALL BE COORDINATED WITH THE OWNER'S REPRESENTATIVE A MINIMUM OF TEN DAYS IN ADVANCE.
14. THE CONTRACTOR SHALL CHECK THE ARCHITECTURAL DRAWINGS FOR EXACT LOCATION AND/OR DIMENSIONS FOR INSTALLATION OF ALL ELECTRICAL ITEMS. ALL QUESTIONABLE LOCATIONS SHALL BE APPROVED BY OWNER'S REPRESENTATIVE PRIOR TO INSTALLATION.
15. ALL EMPTY CONDUITS SHALL CONTAIN JET LINE #232 POLYOLEFIN 200 LB. TEST.
16. ALL WORK SHOWN ON THE ELECTRICAL PLANS SHALL BE PERFORMED BY THE CONTRACTOR UNLESS NOTED OTHERWISE.
17. ALL SERVICE EQUIPMENT AND ELECTRICAL PANELS SHALL HAVE A MINIMUM CLEAR AREA 30" WIDE AND 36" DEEP IN FRONT. THIS CLEAR AREA MUST EXTEND FROM FLOOR TO CEILING WITH NO INTRUSIONS FROM OTHER EQUIPMENT, CABINETS, COUNTERS, APPLIANCES, ETC. ELECTRICAL PANELS ARE NOT ALLOWED IN CLOTHES CLOSETS OR RESTROOMS.
18. THE CONTRACTOR SHALL MAINTAIN ACCURATE RECORDS OF ALL FIELD MODIFICATIONS AND ADJUSTMENTS AND SHALL DELIVER "AS–BUILT" DRAWINGS TO THE OWNER UPON COMPLETION OF THE WORK.
19. EXTERIOR BURIED CONDUIT RUNS SHALL BE MINIMUM 24" BELOW FINISHED GRADE. PROVIDE DETECTABLE CAUTION TAPE 12" BELOW GRADE.
20. REFER TO SPECIFICATIONS FOR FURTHER INFORMATION.

GENERAL DEMOLITION NOTES

1. THE CONTRACTOR SHALL VISIT THE SITE TO DETERMINE EXISTING CONDITIONS PRIOR TO SUBMITTING BID.
2. THE OWNER HAS THE FIRST RIGHT OF REFUSAL FOR ANY REMOVED EXISTING ITEM. COORDINATE WITH THE OWNER & A/E.
3. THE CONTRACTOR SHALL ENSURE THAT THERE IS NO INTERRUPTION OF SERVICES TO EXISTING BUILDINGS DURING CONSTRUCTION. ALL OUTAGES SHALL BE SCHEDULED WITH THE OWNERS REPRESENTATIVE.
4. THE ELECTRICAL PLANS DO NOT INDICATE ALL EXISTING INSTALLATIONS.
5. THE INSTALLER IS RESPONSIBLE FOR ALL FEES, PERMITS AND INSPECTIONS WITHOUT ADDITIONAL CHARGE TO THE OWNER.
6. THESE DRAWINGS WERE DEVELOPED **JUNE 2019**. THE CONTRACTOR IS RESPONSIBLE FOR PERFORMING A THOROUGH SITE SURVEY AND NOTIFYING THE ENGINEER OR OWNER OF ANY DISCREPANCIES PRIOR TO COMMENCING WORK.
7. THE REUSE OF EXISTING ELECTRICAL COMPONENTS SHALL COMPLY WITH THE **2017** VERSION OF THE NEC.
8. THE CONTRACTOR IS RESPONSIBLE FOR THE REMOVAL OF ELECTRICAL CONDUIT AND WIRES SERVING EQUIPMENT TO BE REMOVED OR RELOCATED.

GODARDESIGN ASSOCIATES, INC.
LANDSCAPE ARCHITECTURE / LAND PLANNING
541 Oleander Street, Neptune Beach, FL 32266
Phone: (904) 247-7729 Fax: (904) 373-9177
www.godarddesign.com LC 0000397

OHMEGA
The Ohmega Group, Inc. | Be Brilliant.
Consulting Engineers
1756 SILVER STREET, JACKSONVILLE, FL 32206
T : 904 807 6512 | WWW.OHMEGAGROUP.COM
FLORIDA COA NO. 25911

MARK A. MORLEY
LICENSE
12-2020
No. 59813
STATE OF FLORIDA
PROFESSIONAL ENGINEER

THIS DRAWING IS AN INSTRUMENT OF SERVICE AND IS THE PROPERTY OF THE OHMEGA GROUP, INC AND IT SHALL NEVER BE REPRODUCED IN WHOLE OR IN PART WITHOUT THE EXPRESS WRITTEN PERMISSION OF THE OHMEGA GROUP, INC.

MEMORIAL PARK REHABILITATION
for Memorial Park Association and the City of Jacksonville
Jacksonville, Florida

Rev.	Date	Comment
1	-	-
2	-	-
3	-	-
4	-	-
5	-	-

Date: 6/11/19
Scale: As Noted
Drawn by: DBJ
Checked by: MAM
TOG Project No.: 00645-01-0519
Sheet Title: ELECTRICAL LEGEND & NOTES
Sheet No.
E1 Of 3

©2019, Godard Design Associates, Inc. These drawings are protected by the copyright laws of the United States. These drawings or any part thereof may not be used for any purpose or reproduced in any form or by any means without the written consent of Godard Design Associates, Inc.

Docusign Envelope ID: 127460E9-814A-4E80-A0A5-49A9B4B0BC73

EXHIBIT C-1

NOTES

1. CONNECT LIGHTING TO EXISTING CIRCUITS. RUN CONDUIT FOR NEW/RELOCATED LIGHT POLES UNDER NEW WALKWAY PAVEMENT TO AVOID EXCESSIVE INTRUSION THROUGH LANDSCAPING ALONG PATHWAYS.

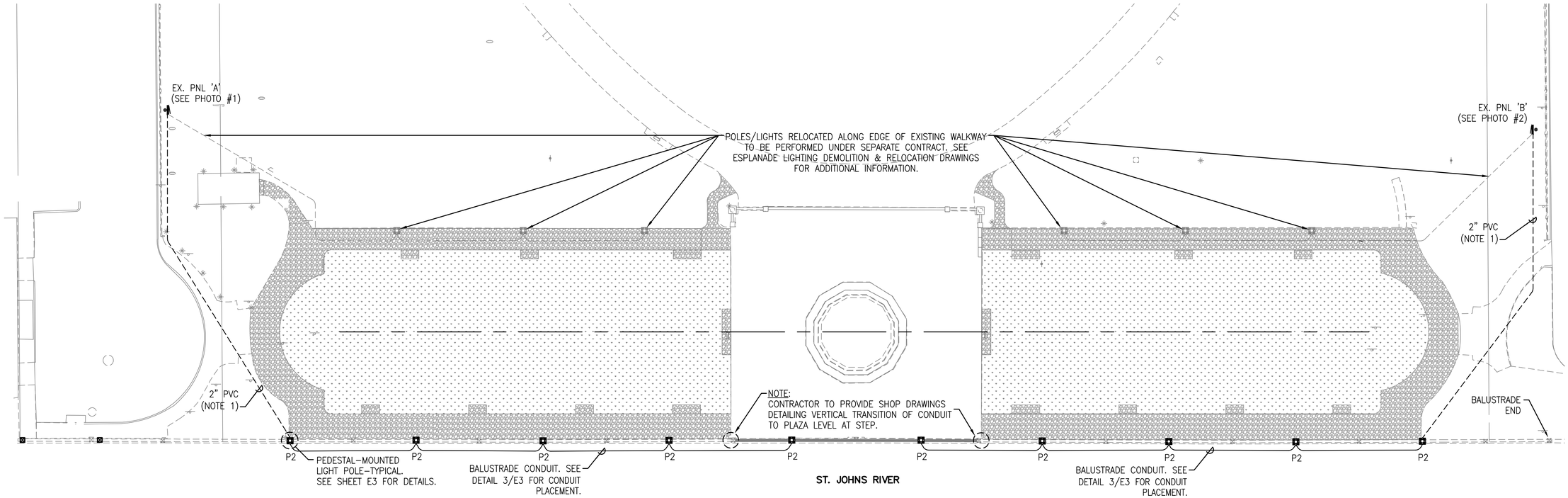

NORTH

ELECTRICAL LAYOUT PLAN - BALUSTRADE

0 10' 20' 40' 60' SCALE: 1" = 20'-0"

1 **PHOTO #1 - EX. PNL 'A'**
SCALE: N.T.S.

2 **PHOTO #2 - EX. PNL 'B'**
SCALE: N.T.S.

GODARDESIGN ASSOCIATES, INC.
LANDSCAPE ARCHITECTURE / LAND PLANNING
541 Oleander Street, Neptune Beach, FL 32266
Phone: (904) 247-7729 Fax: (904) 373-9177
www.godarddesign.com LC 0000397

OHMEGA
The Ohmega Group, Inc. | Be Brilliant.
Consulting Engineers
1756 SILVER STREET, JACKSONVILLE, FL 32206
T : 904 807 6512 | WWW.OHMEGAGROUP.COM
FLORIDA COA NO. 25911

MARK A. MORLEY
LICENSE
12-2020
No. 59813
STATE OF FLORIDA
PROFESSIONAL ENGINEER

THIS DRAWING IS AN INSTRUMENT OF SERVICE AND IS THE PROPERTY OF THE OHMEGA GROUP, INC AND IT SHALL NEVER BE REPRODUCED IN WHOLE OR IN PART WITHOUT THE EXPRESS WRITTEN PERMISSION OF THE OHMEGA GROUP, INC.

MEMORIAL PARK
REHABILITATION
for Memorial Park Association
and the City of Jacksonville
Jacksonville, Florida

Rev.	Date	Comment
1	-	-
2	-	-
3	-	-
4	-	-
5	-	-

Date: 6/11/19
Scale: As Noted
Drawn by: DBJ
Checked by: MAM
TOG Project No.: 00645-01-0519
Sheet Title:
ELECTRICAL LAYOUT PLAN
Sheet No.
E2 Of 3

©2019, Godard Design Associates, Inc. These drawings are protected by the copyright laws of the United States. These drawings or any part thereof may not be used for any purpose or reproduced in any form or by any means without the written consent of Godard Design Associates, Inc.

Docusign Envelope ID: 127460E9-814A-4E80-A0A5-49A9B4B0BC73

EXHIBIT C-1

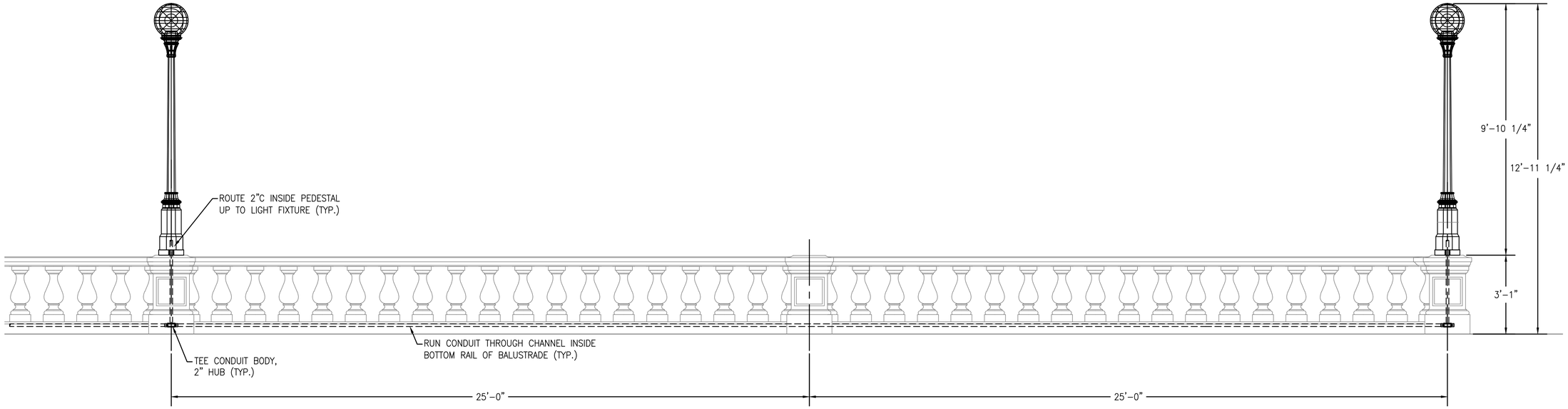

1 **TYPICAL BALUSTRADE LIGHTING POLE ELEVATION, TYPE 'P2'**
SCALE: NONE

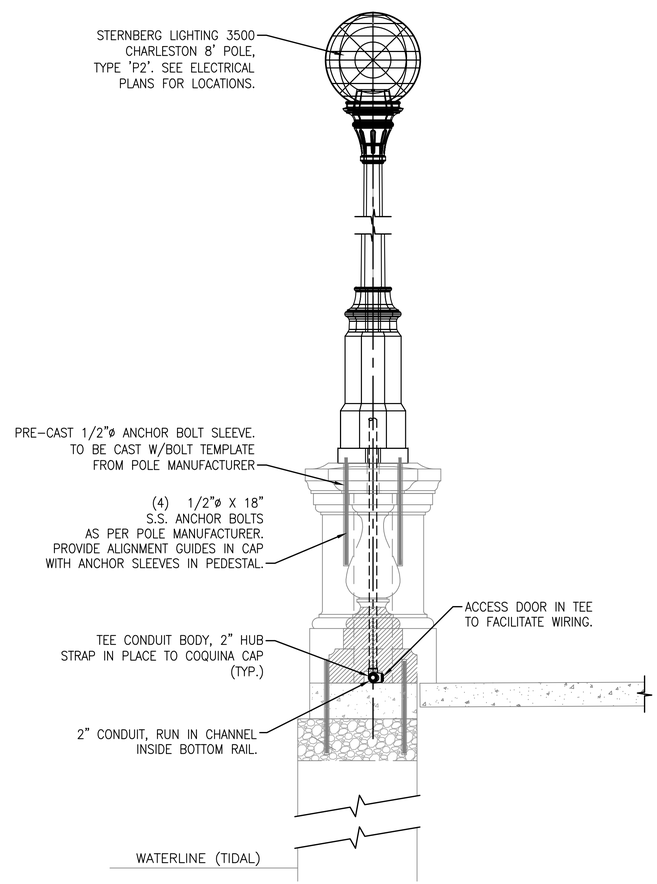

2 **NOT USED**
SCALE: NONE

3 **TYPICAL LIGHTING POLE PEDESTAL AT PLAZA, TYPE 'P2'**
SCALE: NONE

4 **NOT USED**
SCALE: NONE

GODARDESIGN ASSOCIATES, INC.
LANDSCAPE ARCHITECTURE / LAND PLANNING
541 Oleander Street, Neptune Beach, FL 32266
Phone: (904) 247-7729 Fax: (904) 373-9177
www.godarddesign.com LC 0000397

OHMEGA
The Ohmega Group, Inc. | Be Brilliant.
Consulting Engineers
1756 SILVER STREET, JACKSONVILLE, FL 32206
T : 904 807 6512 | WWW.OHMEGAGROUP.COM
FLORIDA COA NO. 25911

MARK A. MORLEY
LICENSE
7-2-2020
No. 59813
STATE OF FLORIDA
PROFESSIONAL ENGINEER

THIS DRAWING IS AN INSTRUMENT OF SERVICE AND IS THE PROPERTY OF THE OHMEGA GROUP, INC AND IT SHALL NEVER BE REPRODUCED IN WHOLE OR IN PART WITHOUT THE EXPRESS WRITTEN PERMISSION OF THE OHMEGA GROUP, INC.

MEMORIAL PARK REHABILITATION

for Memorial Park Association
and the City of Jacksonville

Jacksonville, Florida

Rev.	Date	Comment
1	-	-
2	-	-
3	-	-
4	-	-
5	-	-

Date: 6/11/19
Scale: As Noted
Drawn by: DBJ
Checked by: MAM
TOG Project No.: 00645-01-0519
Sheet Title: BALUSTRADE ELECTRICAL DETAILS
Sheet No.
E3 Of 3

©2019, Godard Design Associates, Inc. These drawings are protected by the copyright laws of the United States. These drawings or any part thereof may not be used for any purpose or reproduced in any form or by any means without the written consent of Godard Design Associates, Inc.

Docusign Envelope ID: 127460E9-814A-4E80-A0A5-49A9B4B0BC73

DESIGN CODE: _____ 2017 FLORIDA BUILDING CODE

WIND LOADING: (ASCE 7/10)
BASIC WIND SPEED _____ 130 MPH
IMPORTANCE FACTOR _____ 1.00

BUILDING CATEGORY _____ SIGN/ FENCE
EXPOSURE CATEGORY _____ D
ENCLOSURE CLASSIFICATION _____ OPEN

MATERIAL SPECIFICATIONS:
THREADED ROD: SHALL BE IN ACCORDANCE WITH SS 304 ASTM F593
WASHERS: SHALL BE SS AND BE IN ACCORDANCE WITH ASTM A193
NUTS: SHALL BE SS AND BE IN ACCORDANCE WITH ASTM A194
METAL CONNECTORS: ALL METAL CONNECTORS WHICH ARE EXPOSED TO EXTERIOR SHALL BE STAINLESS STEEL
EPOXY: HILTI HIT-RE 500 V3 EPOXY
REINFORCING STEEL: SHALL BE ASTM A955, GRADE 60.

GENERAL NOTES:
THESE CONTRACT DOCUMENTS REPRESENT THE FINISHED STRUCTURE. THEY DO NOT INDICATE THE METHOD OF CONSTRUCTION. THE CONTRACTOR SHALL PROVIDE ALL MEASURES NECESSARY TO PROTECT THE STRUCTURE, WORKERS AND OTHER PERSONS DURING CONSTRUCTION. SUCH MEASURES SHALL INCLUDE, BUT ARE NOT LIMITED TO, MEANS AND METHODS, BRACING, SHORING, FORMS, SCAFFOLDING, GUYING OR OTHER MEANS TO AVOID EXCESSIVE STRESSES AND TO HOLD STRUCTURAL ELEMENTS IN PLACE DURING CONSTRUCTION. OBSERVATION VISITS TO THE SITE BY THE STRUCTURAL ENGINEER OR STRUCTURAL OBSERVERS SHALL NOT INCLUDE INSPECTION OF THE ABOVE ITEMS.

TYPICAL DETAILS AND NOTES ON THESE SHEETS SHALL APPLY UNLESS SPECIFICALLY SHOWN OR NOTED OTHERWISE. CONSTRUCTION DETAILS NOT FULLY SHOWN OR NOTED SHALL BE SIMILAR TO DETAILS SHOWN FOR SIMILAR CONDITIONS. ALL WORK, MATERIALS AND CONSTRUCTION SHALL COMPLY WITH ALL APPLICABLE BUILDING CODES, REGULATIONS AND SAFETY REQMT'S.

WHERE A DETAIL, TYPICAL DETAIL, SECTION, TYPICAL SECTION OR PLAN NOTE IS SHOWN FOR ONE CONDITION, IT SHALL APPLY FOR ALL SIMILAR OR LIKE CONDITIONS UNLESS OTHERWISE NOTED.

CONTRACT DOCUMENTS INCLUDE, BUT ARE NOT LIMITED TO, THE STRUCTURAL DOCUMENTS (DRAWINGS AND SPECIFICATIONS), BUT DO NOT INCLUDE SHOP DRAWINGS, VENDOR DRAWINGS, OR MATERIAL PREPARED AND SUBMITTED BY THE CONTRACTOR.

CONTRACT DOCUMENTS SHALL GOVERN IN THE EVENT OF A CONFLICT WITH THE CODE OF PRACTICE OR SPECIFICATIONS OF ACI, PCI, AISC, SJI OR OTHER STANDARDS. WHERE A CONFLICT OCCURS WITHIN THE CONTRACT DOCUMENTS, THE STRICTEST REQUIREMENT SHALL GOVERN.

MATERIAL, WORKMANSHIP, AND DESIGN SHALL CONFORM TO THE REFERENCED BUILDING CODE.

THE GENERAL CONTRACTOR SHALL VERIFY ALL DIMENSIONS AND SITE CONDITIONS AND NOTIFY EOR OF ANY DISCREPANCIES PRIOR TO PROCEEDING WITH WORK. FOR DIMENSIONS NOT SHOWN ON STRUCTURAL DRAWINGS, SEE HARDSCAPE DRAWINGS. DO NOT SCALE FOR DIMENSIONS NOT SHOWN ON DRAWINGS. SEND WRITTEN REQUEST FOR INFORMATION TO THE ARCHITECT FOR DIMENSIONS NOT PROVIDED.

CONTRACTOR HAS SOLE RESPONSIBILITY FOR MEANS, METHODS, TECHNIQUES, SEQUENCES, AND PROCEDURES OF CONSTRUCTION. CONTRACTOR HAS SOLE RESPONSIBILITY FOR THE DESIGN, ADEQUACY, AND SAFETY OF ERECTION BRACING, SHORING, TEMPORARY SUPPORTS. CONTRACTOR HAS SOLE RESPONSIBILITY TO COMPLY WITH ALL OSHA SAFETY REGULATIONS FOR ITS EMPLOYEES.

NO STRUCTURAL CHANGE FROM THE APPROVED PLANS AND SPECIFICATIONS SHALL BE MADE IN THE FIELD UNLESS WRITTEN APPROVAL IS OBTAINED PRIOR TO MAKING SUCH CHANGE. CHANGES WITHOUT THE WRITTEN APPROVAL SHALL BE THE RESPONSIBILITY OF THE CONTRACTOR. THE CONDITION SHALL BE REPAIRED OR REPLACED AS DIRECTED.

EXPOXY ANCHORS – NOTES:
ADHESIVE ANCHORS AS SHOWN ON CONTRACT DOCUMENTS SHALL CONSIST OF AN ALL-THREAD GRADE 304 STAINLESS STEEL ANCHOR WITH HILTI HIT-RE 500 V3 EPOXY

POST-INSTALLED ANCHORS SHALL ONLY BE USED WHERE SPECIFIED ON THE DRAWINGS. . CARE SHALL BE GIVEN TO AVOID CONFLICTS WITH EXISTING REBAR. HOLES SHALL BE DRILLED AND CLEANED PER THE MANUFACTURER'S INSTRUCTIONS. ANCHORS SHALL BE INSTALLED PER THE MANUFACTURER'S INSTALLATION INSTRUCTIONS AT NOT LESS THAN MINIMUM EDGE DISTANCES AND/OR SPACING INDICATED IN THE MANUFACTURER'S LITERATURE. UNLESS SPECIFIED OTHERWISE, SUBSTITUTION REQUESTS, FOR PRODUCTS OTHER THAN THOSE SPECIFIED, SHALL BE SUBMITTED TO THE ENGINEER WITH CALCULATIONS THAT ARE PREPARED AND SEALED BY A REGISTERED PROFESSIONAL ENGINEER SHOWING THAT THE SUBSTITUTED PRODUCT WILL ACHIEVE AN EQUIVALENT CAPACITY USING THE APPROPRIATE DESIGN PROCEDURE REQUIRED BY THE BUILDING CODE.

ON-SITE EPOXY PULL TEST NOTES:
PRIOR TO THE INSTALLATION OF THE BALUSTRADE, THE CONTRACTOR SHALL HIRE A 3RD PARTY TESTING COMPANY TO PERFORMED AN ONSITE PULL TEST OF THE ½" THREADED RODS EPOXIED INTO THE EXISTING CONCRETE BULK HEAD. PULL TEST SHALL BE PERFORMED EVERY 50' ALONG THE BULK HEAD. THE ANCHORS SHALL BE PULLED TO A MINIMUM OF 700# AND A MAXIMUM OF 900#. SUBMIT TESTING RESULTS TO EOR FOR APPROVAL. RESULTS LESS THAN 700# MAY REQUIRE ADDITIONAL STRUCTURAL REPAIRS.

EXHIBIT C-1

CHRISTOPHER J. SABOURIN
LICENSE
No. 71461
STATE OF FLORIDA
PROFESSIONAL ENGINEER

CHRISTOPHER J SABOURIN STATE OF FLORIDA, PROFESSIONAL ENGINEER, LICENSE NO. 71461.

THIS DOCUMENT HAS BEEN ELECTRONICALLY SIGNED AND SEALED BY CHRISTOPHER J SABOURIN, PE ON 12.24.19 USING A SHA AUTHENTICATION CODE.

PRINTED COPIES OF THIS DOCUMENT ARE NOT CONSIDERED SIGNED AND SEALED AND THE SHA AUTHENTICATION CODE MUST BE VERIFIED ON ANY ELECTRONIC COPIES

SABO
STRUCTURAL
ENGINEERING
CA#32529
1205 BEACH BLVD JAX BEACH, FL
904-712-5759
CHRIS@SABOENG.COM

PLAN NAME
MEMORIAL PARK
SSE No.
BRET-18-0233

ISSUE	DATE
REVIEW	06.11.19
PERMIT	12.24.19

MEMORIAL PARK
REHABILITATION
MEMORIAL PARK ASSOCIATION
JACKSONVILLE, FL

FIELD ALTERATION
CONTRACTOR SHALL CONTACT CHRISTOPHER SABOURIN PE PRIOR TO MAKING ANY STRUCTURAL FIELD MODIFICATIONS WHICH MAY VARY FROM THE INTENT OF THE ORIGINAL CONSTRUCTION DOCUMENTS. ANY FIELD ALTERATIONS MADE PRIOR TO BEING APPROVED BY CHRISTOPHER SABOURIN MAY RESULT IN ADDITIONAL ENGINEERING OR INSPECTION FEES.

SCALING
DO NOT SCALE DIMENSIONS FROM THESE DRAWINGS. IF A DIMENSION IS UNCLEAR REFER TO THE ARCHITECTURAL DRAWINGS OR CONTACT THE E.O.R.

DESIGN CRITERIA AND GENERAL NOTES

SHEET
S0.0
SHEET 1 OF 5

Docusign Envelope ID: 127460E9-814A-4E80-A0A5-49A9B4B0BC73

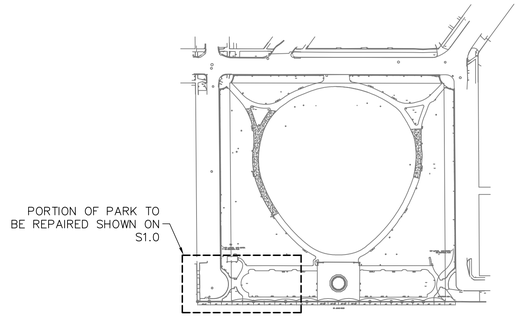

KEY PLAN
SCALE: N.T.S.

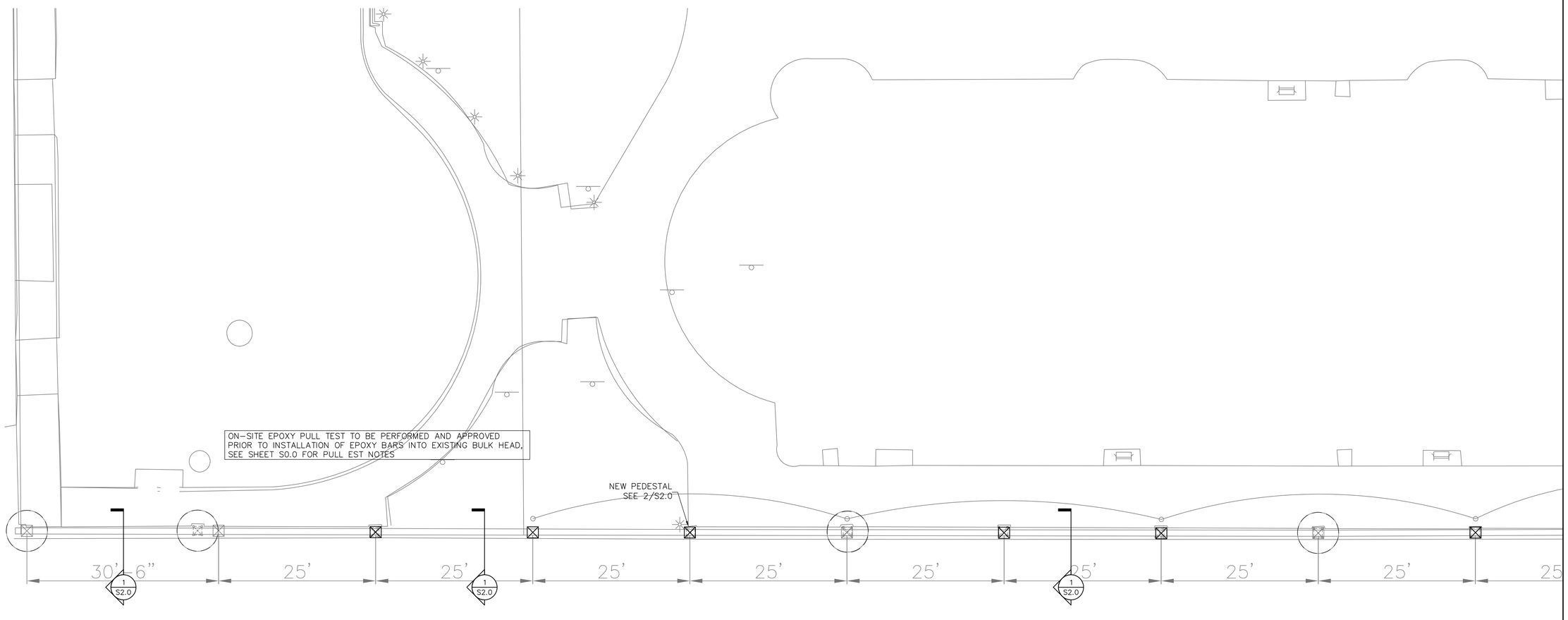

PARTIAL PLAN
SCALE: 3/16" = 1'-0"

EXHIBIT C-1

CHRISTOPHER J. SABOURIN
LICENSE
No. 71461
STATE OF
FLORIDA
PROFESSIONAL ENGINEER

CHRISTOPHER J SABOURIN STATE OF FLORIDA, PROFESSIONAL ENGINEER, LICENSE NO. 71461.

THIS DOCUMENT HAS BEEN ELECTRONICALLY SIGNED AND SEALED BY CHRISTOPHER J SABOURIN, PE ON 12.24.19 USING A SHA AUTHENTICATION CODE.

PRINTED COPIES OF THIS DOCUMENT ARE NOT CONSIDERED SIGNED AND SEALED AND THE SHA AUTHENTICATION CODE MUST BE VERIFIED ON ANY ELECTRONIC COPIES

SABO
STRUCTURAL
ENGINEERING
CA#32529
1205 BEACH BLVD JAX BEACH, FL
904-712-5759
CHRIS@SABOENG.COM

PLAN NAME
MEMORIAL PARK
SSE No.
BRET-18-0233

ISSUE	DATE
REVIEW	06.11.19
PERMIT	12.24.19

MEMORIAL PARK REHABILITATION

MEMORIAL PARK ASSOCIATION
JACKSONVILLE, FL

FIELD ALTERATION

CONTRACTOR SHALL CONTACT CHRISTOPHER SABOURIN PE PRIOR TO MAKING ANY STRUCTURAL FIELD MODIFICATIONS WHICH MAY VARY FROM THE INTENT OF THE ORIGINAL CONSTRUCTION DOCUMENTS. ANY FIELD ALTERATIONS MADE PRIOR TO BEING APPROVED BY CHRISTOPHER SABOURIN MAY RESULT IN ADDITIONAL ENGINEERING OR INSPECTION FEES.

SCALING

DO NOT SCALE DIMENSIONS FROM THESE DRAWINGS. IF A DIMENSION IS UNCLEAR REFER TO THE ARCHITECTURAL DRAWINGS OR CONTACT THE E.O.R.

BALUSTRADE
REPAIR
PLAN

SHEET
S1.0
SHEET 2 OF 5

Docusign Envelope ID: 127460E9-814A-4E80-A0A5-49A9B4B0BC73

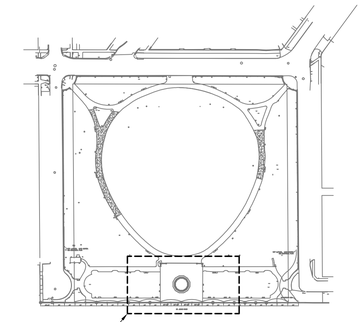

PORTION OF PARK TO BE REPAIRED SHOWN ON S1.1

KEY PLAN

SCALE: N.T.S.

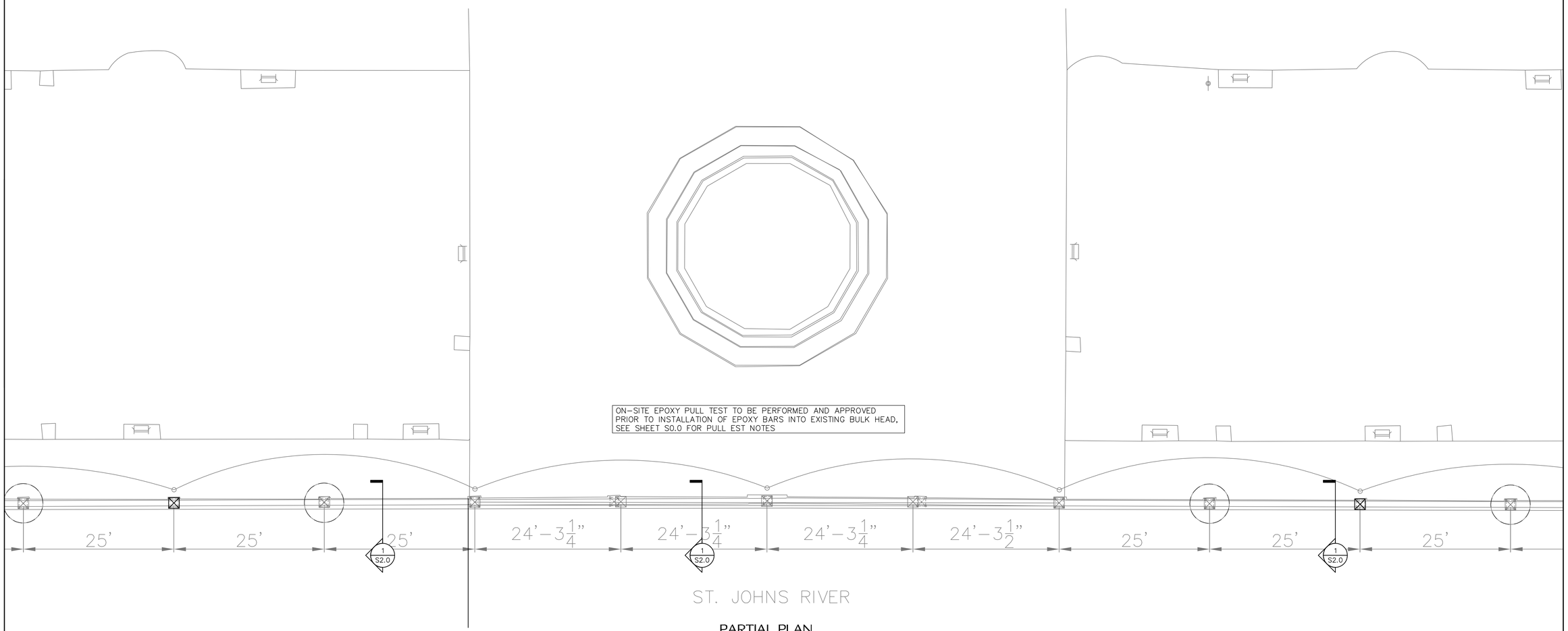

PARTIAL PLAN

SCALE: 3/16" = 1'-0"

EXHIBIT C-1

CHRISTOPHER J. SABOURIN LICENSE No. 71461 STATE OF FLORIDA PROFESSIONAL ENGINEER

CHRISTOPHER J SABOURIN STATE OF FLORIDA, PROFESSIONAL ENGINEER, LICENSE NO. 71461.

THIS DOCUMENT HAS BEEN ELECTRONICALLY SIGNED AND SEALED BY CHRISTOPHER J SABOURIN, PE ON 12.24.19 USING A SHA AUTHENTICATION CODE.

PRINTED COPIES OF THIS DOCUMENT ARE NOT CONSIDERED SIGNED AND SEALED AND THE SHA AUTHENTICATION CODE MUST BE VERIFIED ON ANY ELECTRONIC COPIES

SABO STRUCTURAL ENGINEERING
CA#32529
1205 BEACH BLVD JAX BEACH, FL
904-712-5759
CHRIS@SABOENG.COM

PLAN NAME
MEMORIAL PARK
SSE No.
BRET-18-0233

ISSUE	DATE
REVIEW	06.11.19
PERMIT	12.24.19

MEMORIAL PARK REHABILITATION

MEMORIAL PARK ASSOCIATION
JACKSONVILLE, FL

FIELD ALTERATION

CONTRACTOR SHALL CONTACT CHRISTOPHER SABOURIN PE PRIOR TO MAKING ANY STRUCTURAL FIELD MODIFICATIONS WHICH MAY VARY FROM THE INTENT OF THE ORIGINAL CONSTRUCTION DOCUMENTS. ANY FIELD ALTERATIONS MADE PRIOR TO BEING APPROVED BY CHRISTOPHER SABOURIN MAY RESULT IN ADDITIONAL ENGINEERING OR INSPECTION FEES.

SCALING

DO NOT SCALE DIMENSIONS FROM THESE DRAWINGS. IF A DIMENSION IS UNCLEAR REFER TO THE ARCHITECTURAL DRAWINGS OR CONTACT THE E.O.R.

BALUSTRADE REPAIR PLAN

SHEET
S1.1
SHEET 3 OF 5

Docusign Envelope ID: 127460E9-814A-4E80-A0A5-49A9B4B0BC73

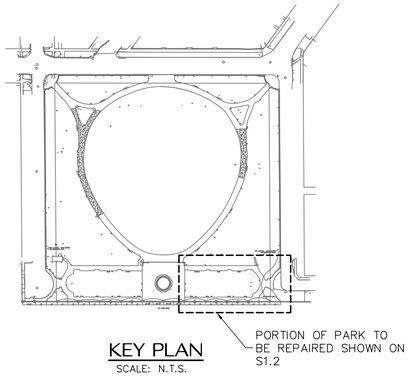

KEY PLAN
SCALE: N.T.S.

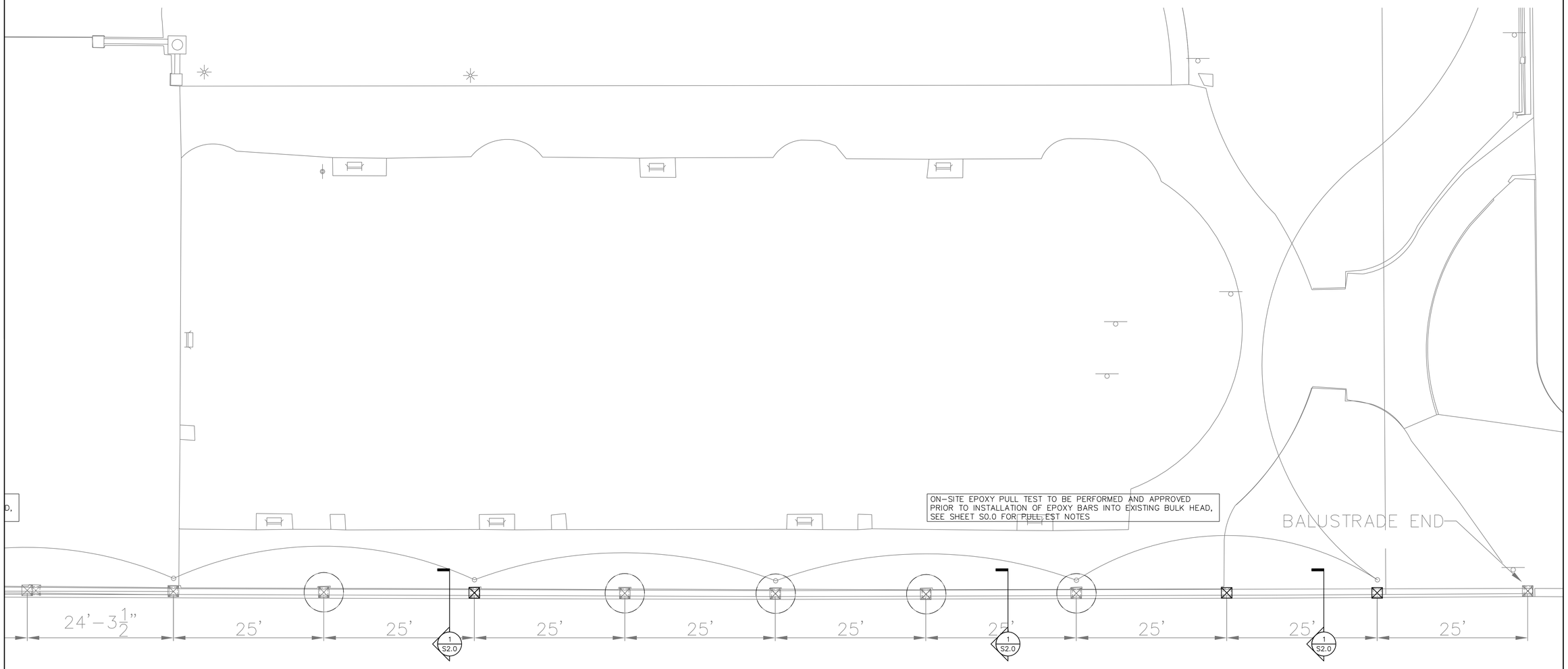

PARTIAL PLAN
SCALE: 3/16" = 1'-0"

EXHIBIT C-1

CHRISTOPHER J. SABOURIN
LICENSE
No. 71461
STATE OF FLORIDA
PROFESSIONAL ENGINEER

CHRISTOPHER J SABOURIN STATE OF FLORIDA, PROFESSIONAL ENGINEER, LICENSE NO. 71461.

THIS DOCUMENT HAS BEEN ELECTRONICALLY SIGNED AND SEALED BY CHRISTOPHER J SABOURIN, PE ON 12.24.19 USING A SHA AUTHENTICATION CODE.

PRINTED COPIES OF THIS DOCUMENT ARE NOT CONSIDERED SIGNED AND SEALED AND THE SHA AUTHENTICATION CODE MUST BE VERIFIED ON ANY ELECTRONIC COPIES

SABO
STRUCTURAL ENGINEERING
CA#32529
1205 BEACH BLVD JAX BEACH, FL
904-712-5759
CHRIS@SABOENG.COM

PLAN NAME
MEMORIAL PARK
SSE No.
BRET-18-0233

ISSUE	DATE
REVIEW	06.11.19
PERMIT	12.24.19

MEMORIAL PARK REHABILITATION

MEMORIAL PARK ASSOCIATION
JACKSONVILLE, FL

FIELD ALTERATION

CONTRACTOR SHALL CONTACT CHRISTOPHER SABOURIN PE PRIOR TO MAKING ANY STRUCTURAL FIELD MODIFICATIONS WHICH MAY VARY FROM THE INTENT OF THE ORIGINAL CONSTRUCTION DOCUMENTS. ANY FIELD ALTERATIONS MADE PRIOR TO BEING APPROVED BY CHRISTOPHER SABOURIN MAY RESULT IN ADDITIONAL ENGINEERING OR INSPECTION FEES.

SCALING

DO NOT SCALE DIMENSIONS FROM THESE DRAWINGS. IF A DIMENSION IS UNCLEAR REFER TO THE ARCHITECTURAL DRAWINGS OR CONTACT THE E.O.R.

BALUSTRADE REPAIR PLAN

SHEET
S1.2
SHEET 4 OF 5

Docusign Envelope ID: 127460E9-814A-4E80-A0A5-49A9B4B0BC73

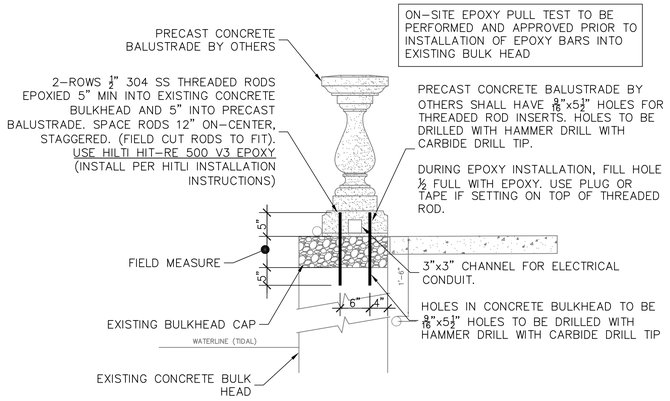

1 S2.0 BALUSTRADE CONNECTION TO EXISTING CAP DETAIL

SCALE: 3/4" = 1'-0"

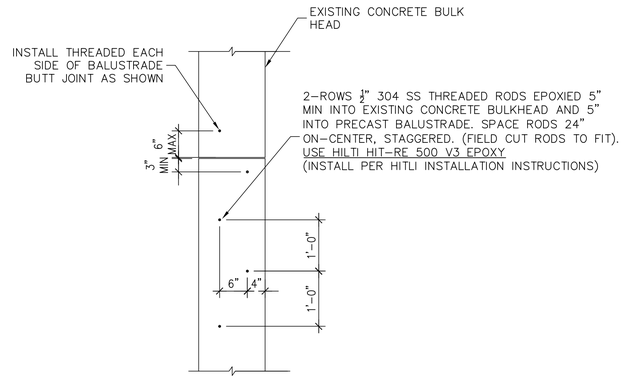

PLAN VIEW OF THREADED ROD SPACING

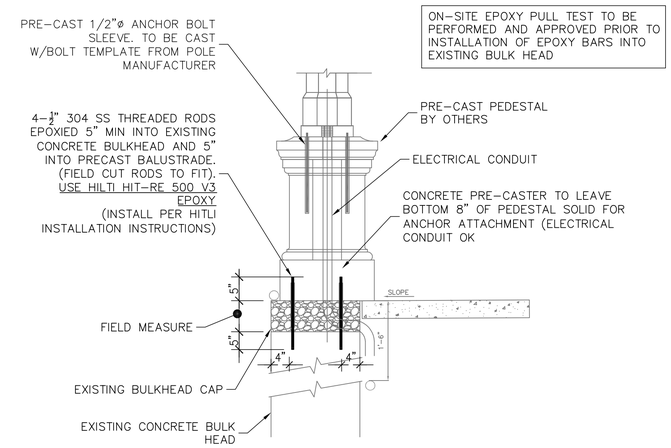

2 S2.0 NEW PEDESTAL CONNECTION TO BULKHEAD

SCALE: 3/4" = 1'-0"

EXHIBIT C-1

CHRISTOPHER J. SABOURIN LICENSE No. 71461 STATE OF FLORIDA PROFESSIONAL ENGINEER

CHRISTOPHER J SABOURIN STATE OF FLORIDA, PROFESSIONAL ENGINEER, LICENSE NO. 71461.

THIS DOCUMENT HAS BEEN ELECTRONICALLY SIGNED AND SEALED BY CHRISTOPHER J SABOURIN, PE ON 12.24.19 USING A SHA AUTHENTICATION CODE.

PRINTED COPIES OF THIS DOCUMENT ARE NOT CONSIDERED SIGNED AND SEALED AND THE SHA AUTHENTICATION CODE MUST BE VERIFIED ON ANY ELECTRONIC COPIES

SABO STRUCTURAL ENGINEERING
CA#32529
1205 BEACH BLVD JAX BEACH, FL
904-712-5759
CHRIS@SABOENG.COM

PLAN NAME
MEMORIAL PARK

SSE No.
BRET-18-0233

ISSUE	DATE
REVIEW	06.11.19
PERMIT	12.24.19

MEMORIAL PARK REHABILITATION
MEMORIAL PARK ASSOCIATION
JACKSONVILLE, FL

FIELD ALTERATION

CONTRACTOR SHALL CONTACT CHRISTOPHER SABOURIN PE PRIOR TO MAKING ANY STRUCTURAL FIELD MODIFICATIONS WHICH MAY VARY FROM THE INTENT OF THE ORIGINAL CONSTRUCTION DOCUMENTS. ANY FIELD ALTERATIONS MADE PRIOR TO BEING APPROVED BY CHRISTOPHER SABOURIN MAY RESULT IN ADDITIONAL ENGINEERING OR INSPECTION FEES.

SCALING

DO NOT SCALE DIMENSIONS FROM THESE DRAWINGS. IF A DIMENSION IS UNCLEAR REFER TO THE ARCHITECTURAL DRAWINGS OR CONTACT THE E.O.R.

BALUSTRADE ATTACHMENT DETAILS

SHEET
S2.0
SHEET 5 OF 5

Docusign Envelope ID: 127460E9-814A-4E80-A0A5-49A9B4B0BC73

City of Jacksonville, Florida
Procurement Award Form (PAF)

Part 1: Form Type JPAC Award Request and Administrative Details

Goods and/or Services: Design-Build Services for Federally Funded Horizontal/Civil Design-Build Projects CDB-0142-23

Requested Action/Authority:

Recommend approval to enter into a contract with J.B. Coxwell Contracting, Inc. that incorporates the attached Scope of Services, Exhibit A and Fee Schedules, Exhibit B. The Period of Service will be for a five-year period from the date of execution and with a maximum indebtedness of $8,000,000.00 per year with carryover for any unused portion.

Justification/Explanation:

Negotiations with the #1 ranked firm have resulted in the attached Scope of Services and Fee Schedule. Individual projects will be awarded by amendment against the maximum indebtedness.

Legal Contract #:	N/A	Contract Date:	08/15/2024	Change Order/AMD #:	N/A	
PO/Release #:	N/A	Bid Date:	08/15/2024	Awarded Supplier:	J. B. Coxwell Contracting, Inc.	
Licenses Verified:	Yes	Effective Date:	08/15/2024	Basis of Award:	Highest Evaluated	
Federally Funded:	Yes	No. Invited:	N/A	Responses Received:	N/A	Attachments:
Solicitation:	N/A - CDB-0142 - 24			Procurement Contract #:	N/A - N/A	
Executed By:	Office of General Counsel					

PoP:Base:	5 years	Options:	N/A	Extension(s):	N/A
JSEB Rec.:	N/A	%:	N/A	Bonds Waived Pursuant To:	N/A

Fund:	00000	Center:	000000	Acct:	000000	Proj:	000000	Activity:	00000000	$	00.00
Fund:		Center:		Acct:		Proj:		Activity:		$	
Fund:		Center:		Acct:		Proj:		Activity:		$	

New NTE/GMP:	$ 8,000,000.00	Contingent Amount:	$ 00.00	DMP/ODPO Amount:	$ 00.00

Using Agency/BU:	PWEN:ENGINEERING_AND_CONSTRUCTION_MANAGEMENT			
Concurrence:	DocuSigned by: Sheldon D. Gibbs, P.E. 843DE27A46A74CA...	Title:	CHIEF OF ENGINEERING CONSTRUCTION MANAGEMENT	7/31/2024
Concurrence:	DocuSigned by: Nina Sicker 1EFA223D5D23487...	Title:	DIRECTOR OF PUBLIC WORKS	8/7/2024
Concurrence:		Title:		
Concurrence:		Title:		

Procurement Analyst/Buyer:	Signed by: Benjamin Kemp 17483D5CD0EE4C1...	Chief of Procurement:	
Name:	Benjamin Kemp	Name:	Dustin L. Freeman

Initial DT

Part 2: JPAC Actions on Above Requests/Recommendations
All Award Actions Subject to Lawfully Appropriated Funds

Members Who Approve:	
Members Who Disapprove:	
Other Action:	

Date:

Part 3: Final Awarding Authority Action

Action:

Date:

Signature:

Docusign Envelope ID: 127460E9-814A-4E80-A0A5-49A9B4B0BC73

PAF Instructions

Form Type: Select the type of award from the dropdown options. This form will be used for all Procurement awards (Administrative Awards and JPAC Requests).

Goods and/or Services: Enter a brief description of the types of goods and services included in the request.

Requested Action/Authority: Enter a brief description of the requested action or authority being sought. i.e.; *request permission to award to the lowest, responsive responsible bidder for ITB or award the highest ranked supplier for an RFP*.

Justification/Explanation: Enter a brief justification or explanation for the requested action. Use this box to add any additional information such as additional account strings, or other information essential for contract execution.

Legal Contract Number: Provide the existing City contract number if applicable. This will be the same number as your POA number.

Contract Date: Select the effective date for the contract using the calendar option in the form. Leave blank for contracts to become effective on the execution date.

Change Order/AMD #: Provide the applicable Change Order or Amendment number represented by this request.

Date: Enter the date of PAF submission.

Effective Date: Enter the effective date of requested authority and/or action.

Solicitation: Select the competitive procurement method used (1Cloud generated prefix), enter the 1Cloud generated numbering sequence, and 1Cloud generated fiscal year of solicitation

Basis of Award: Select from Lowest Price Technical Acceptable (LPTA), Highest Price Technical Acceptable (HPTA),

Procurement Contract #: This is your PO number. Select Type, Enter Number

PO/Release Number: Enter PO Release Number

Awarded Supplier: Enter Awarded Supplier Name

Federally Funded: Select yes or no from dropdown if Federal Funds will be used.

Responses Received: This is the number of responses received.

No Bids Received: The number of responses received that indicated supplier would not bid.

Executed By: Select whether executed by OGC or JPAC / Chief of Procurement

PoP Base: Select the Period of Performance for the initial period.

Options: Period for each renewal period i.e. one (1) two (2) year.

Docusign Envelope ID: 127460E9-814A-4E80-A0A5-49A9B4B0BC73

Extensions: How many extensions have we preformed after the initial base period and option periods have been completed?

JSEB Goal: Select the percentage established by JSEB.

JESB Other: Select Encouragement or Set Aside Option

Bonds Waived Pursuant to: Select authority allowing bonds to be waived.

Funding Source: Fund/Center/Account/Project/Activity, all fields are required even if zeros.

New NTE/GMP: Enter the new total not to exceed the amount. Note, this should match the contract maximum indebtedness, if applicable**.**

Contingent Amount: If your agency requests an allowance for unforeseen additional expenses, then specify the amount of your requested increase and new NTE that represents the contingency allowance. This is over and above any quote.

DMP/ODPO Amount: Enter the total Direct Materials Purchase/Owner Direct Purchase Order amount for project.

Attachments: Name any attachments included as supplemental information to the PAF.

Using Agency/BU: This should be the requesting agency/requirement owner.

Concurrence: Electronic Signature

Title: Enter the title of person electronically signing form.

**Any fields where there is no data available, or no entry is required, either leave it blank or enter N/A. Any fields where there is known data, include for informational purposes. Any changes to an original award should contain the data that is being changed and any other relevant data required for JPAC review and approval.*

Docusign Envelope ID: 127460E9-814A-4E80-A0A5-49A9B4B0BC73

Description of Services and Deliverables

4.1 Project Scope

The scope of work required of a selected DBF for this RFQ shall include, but it shall not be limited to, the following DESIGN, PERMITTING, and CONSTRUCTION elements necessary for the construction, reconstruction, repair and restoration or demolition activities related to earthwork, roadways, bridges, retaining walls, bulkheads, boardwalks, beach walkovers, drainage structures/systems, intersections, sidewalks, traffic signals, pavement markings, signing, parking areas, lighting, streetscapes and utilities which may or may not have been damaged as a result of a hurricane, terrorist attack or other disaster event and in accordance with the requirements specified in the Design Criteria Package prepared by City.

A. Design

Design elements of the project (drawings, engineering calculations, reports and specifications) shall cover the following:

- Providing Preliminary (60%) and Final (100%) Design Drawings and Specifications
- Providing Final Construction Contract Documents
- Obtaining all permits and approvals from government agencies and utility companies
- Providing Quality Control for the Design Phase

A DBF selected by the City for negotiating the GMP and the GCD shall provide to the City Project Manager the complete Preliminary (60%) Design at least one week before the date established for commencing the GMP & GCD negotiations.

Design Documents prepared by the DBF shall meet all technical and formal requirements of all pertinent building codes and construction standards as prescribed by the State of Florida and the City of Jacksonville laws and ordinances. All design documents shall be prepared, signed, and sealed by licensed design professionals authorized to practice architecture, landscape architecture, and engineering in the State of Florida. Minimum 2012 AutoCAD Version shall be used in the preparation of the design drawings.

In the Design Criteria Package, the City may also provide the Design Build Firm selected for preparing the TP and negotiating the GMP & GCD with the following design documents for a specific project:

- Topographical and Tree Survey Map including existing utilities
- Environmental Site Assessment Reports
- Geotechnical Exploration Reports
- Utility Availability Letters from JEA

B. Permitting

DBF shall secure and obtain all required permits and approvals from the State of Florida and the City of Jacksonville regulatory agencies as required by law. In addition, the DBF will be required to secure approval or statement of concurrence from applicable utility companies such as JEA, TECO Peoples Gas and/or Sawyer Gas, AT&T Telephone, Comcast, MCI Telecommunications, etc.

Permits and/or approvals from the following agencies must be secured depending on the specific category & location of each individual facility-work type improvement project:

- City of Jacksonville – Building Inspection Division

Docusign Envelope ID: 127460E9-814A-4E80-A0A5-49A9B4B0BC73

- City of Jacksonville – Development Management Group
- City of Jacksonville – Public Works Department
- St Johns River Water Management District
- Florida Department of Environmental Protection
- US Army Corps of Engineers
- Florida Department of Transportation
- JEA, TECO Peoples Gas, Sawyer Gas, Comcast, MCI telecommunications, AT&T Telephone, etc.
- Other Regulatory Agencies as it may be applicable to specific projects

C. Construction

The DBF shall be responsible for fully providing the following elements of each facility-work type improvement project as it may be required in the DCP for a specific project:

- Demolition of existing aboveground and/or subsurface site elements, buildings, utilities, and trees as specified in construction contract documents and a removal and lawful disposal of site/construction debris.
- Furnishing all materials, equipment, labor, and incidentals, and to execute all operations necessary for the full completion of roadways and other pertinent engineering work including: clearing construction site and replacing unsuitable soils; completing earthwork and sub-base; constructing roadway base; providing grading, paving, drainage, stormwater management system, landscape and irrigation, roadway illumination, and sidewalks; providing all utilities and utility connections; and all other project elements as stipulated in the approved project design drawings and specifications.
- Providing maintenance of traffic.
- Providing erosion and sediment control work.
- Providing environmental coordination.
- Providing construction project management.
- Providing Quality Control for construction.
- Obtaining the Certificate of Occupancy issued by the Building Inspection Division.
- Providing as-built drawings & certifications and obtaining acceptance of Using Agencies.
- Providing all warranty services.

The DBF shall provide all construction work, materials, products, equipment, and methods that fully comply with all appropriate building codes and construction standards as prescribed by laws and ordinances of the State of Florida and City of Jacksonville as they may relate to a specific scope of the category of horizontal type improvement project.

D. Design-Build Responsibility

The Design-Build Firm shall be responsible for survey, geotechnical investigation, design, acquisition of all permits not acquired by the **City**, any and all information required to modify permits acquired by the **City**, maintenance of traffic, erosion control, demolition, and construction on or before the Project completion date indicated in the Proposal. The Design-Build Firm will coordinate all utility relocations.

The Design-Build Firm shall be responsible for compliance with Design and Construction Criteria (Section 4.7) which sets forth requirements regarding survey, design, construction, and maintenance of traffic during construction, requirements relative to project management, scheduling, and coordination with other agencies and entities such as state and local government, utilities and the public.

Docusign Envelope ID: 127460E9-814A-4E80-A0A5-49A9B4B0BC73

The Design-Build Firm may propose changes which differ from the plans. Proposed changes must be coordinated through the City. If changes are proposed to the configuration, the Design-Build Firm shall be responsible for preparing the necessary analyses and documentation required to satisfy requirements to obtain approval of the City. The Design-Build Firm shall provide the required documentation for review and processing. The Design-Build Firm will not be compensated for any additional costs or time resulting from proposed changes.

The Design-Build Firm shall examine the Contract Documents and the site of the proposed work carefully before submitting a Proposal for the work contemplated and shall investigate the conditions to be encountered, as to the character, quality, and quantities of work to be performed and materials to be furnished and as to the requirements of all Contract Documents. Written notification of differing site conditions discovered during the design or construction phase of the Project will be given to the City Project Manager.

The Design-Build Firm shall examine boring data, where available, and make their own interpretation of the subsoil investigations and other preliminary data and shall base their bid on their own opinion of the conditions likely to be encountered. The submission of a proposal is prima facie evidence that the Design-Build Firm has made an examination as described in this provision.

The Design-Build Firm shall demonstrate good project management practices while working on this project. These include communication with the **City** and others as necessary, management of time and resources, and documentation.

E. City Responsibility

The City of Jacksonville will provide a detailed description, location, classification, scope, availability of funds, and other requirements for each project with the Design Criteria Package.

The **City** will provide contract administration, management services, construction engineering inspection services, environmental oversight, and quality acceptance reviews of all work associated with the development and preparation of the contract plans, permits, and construction of the improvements. The **City** will provide job specific information and/or functions as outlined in this document. The cost of project administration performed by employees or consultants of the City including, but not limited to, planning, programming, design and construction project management, construction engineering inspection, preparation of the Design Criteria Package, and other administrative tasks ordinarily conducted by the City shall be excluded from the maximum cost for design and construction.

This Request for Qualifications does not commit the **City** to make studies or designs for the preparation of any proposal, nor to procure or contract for any articles or services.

The **City** does not guarantee the details pertaining to borings, as shown on any documents supplied by the **City**, to be more than a general indication of the materials likely to be found adjacent to holes bored at the site of the work, approximately at the locations indicated.

4.2 Schedule of Events

See Section 1.17 of this RFQ.

4.3 Project Requirements

A. Governing Regulations:

The services performed by the Design-Build Firm shall be in compliance with all applicable Manuals and Guidelines including the **City**, **Department**, FHWA, AASHTO, and additional requirements specified in this document. Except to the extent inconsistent with the specific provisions in this document, the current edition, including updates, of the following Manuals and Guidelines shall be used in the performance of this work.

Docusign Envelope ID: 127460E9-814A-4E80-A0A5-49A9B4B0BC73

Current edition is defined as the edition in place and adopted by the **City** at the date of advertisement of this contract with the exception of the Standard Specifications for Road and Bridge Construction (Divisions II & III), Special Provisions and Supplemental Specifications, Manual on Uniform Traffic Control Devices (MUTCD), Design Standards and Design Standards Modifications. The Design-Build Firm shall use the edition of the Standard Specifications for Road and Bridge Construction (Divisions II & III), Special Provisions and Supplemental Specifications, Design Standards and Design Standard Modifications that is in effect at the time the Bid Price Proposals are due in the **City** Office. The Design-Build Firm shall use the 2009 edition of the MUTCD as amended in 2012. It shall be the Design-Build Firm's responsibility to acquire and utilize the necessary manuals and guidelines that apply to the work required to complete this Project. The services will include preparation of all documents necessary to complete the Project as described in Section I of this document.

1. City of Jacksonville Design Standards
   http://www.coj.net/departments/planning-and-development/development-services-division/city-standard-details-(dwg---pdf-formats).aspx

2. City of Jacksonville Standard Specifications
   http://www.coj.net/departments/planning-and-development/development-services-division/city-standard-specifications.aspx

3. City of Jacksonville Land Development Procedures Manual
   http://www.coj.net/departments/planning-and-development/development-services-division/land-development-procedures-manual.aspx

4. JEA Water and Sewer Standards
   https://www.jea.com/Working_With_JEA/Engineering_and_Construction/Reference_Materials/Water_and_Sewer_Standards.aspx

5. Florida Department of Transportation Design Standards
   http://www.dot.state.fl.us/rddesign/DesignStandards/Standards.shtm

6. Florida Department of Transportation Standard Specifications for Road and Bridge Construction (Divisions II & III), Special Provisions and Supplemental Specifications
   http://www.dot.state.fl.us/programmanagement/specs.shtm

7. Florida Department of Transportation Drainage Manual
   http://www.dot.state.fl.us/rddesign/Drainage/ManualsandHandbooks.shtm

8. Florida Department of Transportation Soils and Foundations Handbook
   http://www.dot.state.fl.us/structures/Manuals/SFH.pdf

9. Instructions for Design Standards
   http://www.dot.state.fl.us/structures/IDS/IDSportal.pdf

10. AASHTO – A Policy on Geometric Design of Highways and Streets
    https://bookstore.transportation.org/collection_detail.aspx?ID=110

11. MUTCD - 2009
    http://mutcd.fhwa.dot.gov/

12. Safe Mobility For Life Program Policy Statement
    http://www.dot.state.fl.us/proceduraldocuments/procedures.shtm

13. Traffic Engineering and Operations Safe Mobility for Life Program
    http://www.dot.state.fl.us/trafficoperations/Operations/SafetyisGolden.shtm

14. Florida Department of Transportation American with Disabilities Act (ADA) Requirements For Access To Department Facilities Procedure
    http://www.dot.state.fl.us/proceduraldocuments/procedures.shtm

15. Florida Department of Transportation Florida Sampling and Testing Methods

Docusign Envelope ID: 127460E9-814A-4E80-A0A5-49A9B4B0BC73

http://www.dot.state.fl.us/statematerialsoffice/administration/resources/library/publications/fstm/disclaimer.shtm

16. Florida Department of Transportation Flexible Pavement Coring and Evaluation Procedure
http://www.dot.state.fl.us/statematerialsoffice/administration/resources/library/publications/materialsmanual/documents/v1-section32-clean.pdf

17. Florida Department of Transportation Design Bulletins and Update Memos
http://www.dot.state.fl.us/rddesign/Bulletin/Default.shtm

18. Florida Department of Transportation Utility Accommodation Manual
http://www.dot.state.fl.us/programmanagement/utilities/UAM.shtm

19. AASHTO LRFD Bridge Design Specifications
https://bookstore.transportation.org/category_item.aspx?id=BR

20. Florida Department of Transportation Flexible Pavement Design Manual
http://www.dot.state.fl.us/rddesign/PM/publicationS.shtm

21. Florida Department of Transportation Rigid Pavement Design Manual
http://www.dot.state.fl.us/rddesign/PM/publicationS.shtm

22. Florida Department of Transportation Pavement Type Selection Manual
http://www.dot.state.fl.us/rddesign/PM/publicationS.shtm

23. Florida Department of Transportation Right of Way Manual
http://www.dot.state.fl.us/rightofway/Documents.shtm

24. Florida Department of Transportation Traffic Engineering Manual
http://www.dot.state.fl.us/TrafficOperations//Operations/Studies/TEM/TEM.shtm

25. Federal Highway Administration Checklist and Guidelines for Review of Geotechnical Reports and Preliminary Plans and Specifications
http://www.fhwa.dot.gov/engineering/geotech/pubs/reviewguide/checklist.cfm

26. AASHTO Guide for the Development of Bicycle Facilities
https://bookstore.transportation.org/collection_detail.aspx?ID=116

27. Federal Highway Administration Hydraulic Engineering Circular Number 18 (HEC 18).
http://www.fhwa.dot.gov/engineering/hydraulics/library_arc.cfm?pub_number=17

28. Florida Department of Transportation Manual of Uniform Minimum Standards for Design, Construction and Maintenance for Streets and Highways
http://www.dot.state.fl.us/rddesign/FloridaGreenbook/FGB.shtm

29. Florida Department of Transportation Project Development and Environment Manual, Parts 1 and 2
http://www.dot.state.fl.us/emo/pubs/pdeman/pdeman1.shtm

30. Florida Department of Transportation Driveway Information Guide
http://www.dot.state.fl.us/planning/systems/programs/sm/accman/pdfs/driveway2008.pdf

31. AASHTO Highway Safety Manual
http://www.highwaysafetymanual.org/Pages/default.aspx

32. Florida Statutes
http://www.leg.state.fl.us/Statutes/index.cfm?Mode=View%20Statutes&Submenu=1&Tab=statutes&CFID=14677574&CFTOKEN=80981948

Docusign Envelope ID: 127460E9-814A-4E80-A0A5-49A9B4B0BC73

B. Innovative Aspects:

All innovative aspects shall be identified separately as such in the Technical Proposal. An innovative aspect does not include revisions to specifications, standards, or established **City** policies. Innovation should be limited to Design-Build Firm's means and methods, approach to Project, etc.

C. Geotechnical Services:

The Design-Build Firm shall be responsible for identifying and performing any geotechnical investigation, analysis and design of foundations, foundation construction, foundation load and integrity testing, and inspection dictated by the Project needs in accordance with **City** guidelines, procedures, and specifications. All geotechnical work necessary shall be performed in accordance with the Governing Regulations. The Design-Build Firm shall be solely responsible for all geotechnical aspects of the Project.

D. City Commitments:

The Design-Build Firm will be responsible for adhering to the project commitments identified below: N/A

E. Environmental Permits:

1. Storm Water and Surface Water:

Plans shall be prepared in accordance with Chapters 373 and 403 (F.S.) and Chapters 40 and 62 (F.A.C.).

2. Permits:

All applicable data shall be prepared in accordance with Chapter 373 and 403, Florida Statutes, Chapters 40 and 62, Florida Administrative Code; Rivers and Harbors Act of 1899, Section 404 of the Clean Water Act, 23 CFR 771, 23 CFR 636, and parts 114 and 115, Title 33, Code of Federal Regulations. In addition to these Federal and State permitting requirements, any dredge and fill permitting required by local agencies shall be prepared in accordance with their specific regulations. Acquisition of all applicable permits will be the responsibility of the Design-Build Firm. Preparation of complete permit packages will be the responsibility of the Design-Build Firm, including but not limited to Environmental Resource Permitting (SJRWMD) and Construction Permitting (FDOT Connection Permit and Drainage Permit). As the permittee, the **City** is responsible for reviewing, approving, and signing, the permit application package including all permit modifications, or subsequent permit applications. If any agency rejects or denies the permit application, it is the Design-Build Firm's responsibility to make whatever changes necessary to ensure the permit is approved.

The Design-Build Firm will be required to pay all permit fees. Any fines levied by permitting agencies shall be the responsibility of the Design-Build Firm.

However, notwithstanding anything above to the contrary, upon the Design-Build Firm's preliminary request for extension of Contract Time being made directly to the **City** Engineer, the **City** reserves unto the **City** Engineer, in their sole and absolute discretion, according to the parameters set forth below, the authority to make a determination to grant a non-compensable time extension for any impacts beyond the reasonable control of the Design-Build Firm in securing permits. Furthermore, as to any such impact, no modification provision will be considered by the **City** Engineer unless the Design-Build Firm clearly establishes that it has continuously from the beginning of the Project aggressively, efficiently and effectively pursued the securing of the permits including the utilization of any and all reasonably available means and methods to overcome all impacts. There shall be no right of any kind on behalf of the Design-Build Firm to challenge or otherwise seek review or appeal in any forum of any determination made by the **City** Engineer under this provision.

Docusign Envelope ID: 127460E9-814A-4E80-A0A5-49A9B4B0BC73

F. Survey:

The Design-Build Firm shall perform all surveying and mapping services necessary to complete the Project including a comprehensive survey of all protected trees within the construction limits. Survey services must also comply with all pertinent Florida Statutes and applicable rules in the Florida Administrative Code. All field survey data will be furnished to the **City** Surveyor in a **City** approved digital format, readily available for input and use in CADD Design files. All surveying and mapping work must be accomplished in accordance with the **Department**'s Surveying Procedure, Topic Nos. 550-030-101; Right-of-Way Mapping Procedure, Topic No. 550-030-015; Aerial Surveying Standards for Transportation Projects Procedure, Topic No. 550-020-002. This work must comply with the Minimum Technical Standards for Professional Surveyors and Mappers, Chapter 5J-17, F.A.C., pursuant to Section 472.027, F.S. This survey also must comply with Chapter 177, F.S.

G. Verification of Existing Conditions:

The Design-Build Firm shall be responsible for verification of existing conditions, including research of all existing **City** records and other information.

By execution of the contract, the Design-Build Firm specifically acknowledges and agrees that the Design-Build Firm is contracting and being compensated for performing adequate investigations of existing site conditions sufficient to support the design developed by the Design-Build Firm and that any information is being provided merely to assist the Design-Build Firm in completing adequate site investigations. Notwithstanding any other provision in the contract documents to the contrary, no additional compensation will be paid in the event of any inaccuracies in the preliminary information.

H. Submittals:

Plans must meet the minimum contents of a particular phase submittal prior to submission for review. The particular phase of each submittal shall be clearly indicated on the cover sheet. Component submittals must be accompanied by sufficient information for adjoining components or areas of work to allow for proper evaluation of the component under review. Prior to providing the **City** with any submittals, the Design-Build Firm is required to perform a quality check of the submittal. If the submittal is incomplete or contains substantial errors, then the **City** will reject the submittal.

The Design-Build Firm shall provide copies of required review documents such as those listed below.

60% Component Plans

5 sets of 11" X 17" plans
5 sets of 11" X 17" each component set
5 copies of Preliminary Geotechnical Report
5 sets of documentation – structures
5 copies of Technical Special Provisions

90% Component Plans

5 sets of 11" X 17" plans
5 sets of 11" X 17" each component set
5 copies of Final Geotechnical Report
5 sets of documentation – structures
5 copies of Technical Special Provisions

Final Component Plans

5 sets of 11" X 17" plans
5 sets of 11" X 17" each component set

Docusign Envelope ID: 127460E9-814A-4E80-A0A5-49A9B4B0BC73

5 sets of final documentation
1 signed and sealed copy of Specifications Package
2 sets of electronic copies of Technical Special Provisions on CD

Construction Set:

1 set of 11"X 17" copies of the signed and sealed plans for the **City** to sign "Released for construction".

Final signed and sealed plans will be delivered to the **City** Project Manager a minimum of fifteen (15) calendar days (excluding Holidays) prior to construction of that component. The **City** Project Manager will send a copy of the final signed and sealed plans to the appropriate office for review and comment. Once all comments have been satisfactorily resolved as determined by the **City**, the **City** Project Manager will initial, date, and sign each submittal as "Released for Construction". Only signed and sealed plans which are signed "Released for Construction" by the **City** Project Manager are valid and all work that the Design-Build Firm performs in advance of the **City** release of Plans will be at the Design-Build Firm's risk. To work at risk, the Design-Build Firm must submit signed and sealed plans and can begin working prior to the **City's** Project Manager providing signed "Release for Construction" plans. The Design-Build Firm shall notify the **City** five (5) days prior to starting work at risk. All work that the Design-Build Firm performs in advance of the **City's** release of Plans will be at the Design-Build Firm's risk.

As-Built Set:

The Design-Build Firm's Professional Engineer in responsible charge of the Project's design shall professionally endorse (sign, seal, and certify) the As-Built Plans, the special provisions and all reference and support documents.

The Design-Build Firm shall complete the As-Built Plans as the Project is being constructed. All changes made subsequent to the "Released for Construction" Plans shall be signed/sealed by the EOR. The As-Built Plans shall reflect all changes initiated by the Design-Build Firm or the **City** in the form of revisions. The record set shall be submitted prior to Project completion for City review and acceptance as a condition precedent to the City issuance of Final Acceptance.

The **City** shall review, certify, and accept the As-built Plans prior to issuing Final Acceptance of the project in order to complete the As-built Plans.

The Design-Build Firm shall furnish to the **City**, upon Project completion, the following:

1 set of 11" X 17" signed and sealed plans
4 sets of 11" X 17" copies of the signed and sealed plans
5 sets of final documentation (if different from final component submittal)
2 Final Project CD's with Electronic As-built plans in CADD and PDF formats

I. Contract Term:

The design-build contract term shall be as set forth in Section 2.7 of this RFQ.

J. Project Schedule:

The Design-Build Firm shall submit a Project schedule which supports the established contract duration submitted as part of the Proposal. The Design-Build Firm's schedule should allow for up to fifteen (15) calendar days (excluding weekends and **City** observed Holidays) review time for **City** review of all submittals.

The minimum number of activities shall be those listed in the payout schedule and those listed below:

Docusign Envelope ID: 127460E9-814A-4E80-A0A5-49A9B4B0BC73

- Anticipated Award Date
- Design Submittals
- Design Survey
- Design Reviews by the **City**
- Design Review / Acceptance Milestones
- Materials Quality Tracking
- Geotechnical Investigation
- Start of Construction
- Clearing and Grubbing
- Construction Mobilization
- Environmental Permit Acquisition
- Permit Submittals
- Holidays (shown as non-work days)
- Additional Construction Milestones as determined by the Design-Build Firm
- Final Completion Date for All Work

K. Key Personnel/Staffing:

The Design-Build Firm's work shall be performed and directed by key personnel identified in the Technical Proposal by the Design-Build Firm. Any changes in the indicated personnel shall be subject to review and approval by the **City** Project Manager. The Design-Build Firm shall have available a professional staff that meets the minimum training and experience set forth in Florida Statute Chapter 455.

L. Meetings and Progress Reporting:

The Design-Build Firm shall anticipate periodic meetings with **City** personnel and other agencies as required for resolution of design and/or construction issues. These meetings may include:

- Technical issue resolution
- Permit agency coordination
- Scoping meetings
- Utility meetings
- Design kickoff meeting
- Comment resolution meetings
- Pre-construction meeting

During design, the Design-Build Firm shall meet with the **City** Design Project Manager on a monthly basis and provide a one-month look ahead of the activities to be completed during the upcoming month.

During construction, the Design-Build Firm shall meet with the **City** Construction Project Manager on a weekly basis and provide a one-week look ahead of the activities to be performed during the coming week.

The Design-Build Firm shall, on a monthly basis, provide written progress reports that describe the items of concern and the work performed on each task.

M. Public Involvement:

The Design-Build Firm may be required to attend and participate in Public Meetings at a time, date, and location to be determined by the **City**.

Docusign Envelope ID: 127460E9-814A-4E80-A0A5-49A9B4B0BC73

N. Quality Management Plan (QMP):

1. **Design:**

The Design-Build Firm shall be responsible for the professional quality, technical accuracy and coordination of all surveys, designs, drawings, specifications, geotechnical and other services furnished by the Design-Build Firm under this contract.

The Design-Build Firm shall provide a Design Quality Management Plan, which describes the Quality Control (QC) procedures to be utilized to verify, independently check, and review all design drawings, specifications, and other documentation prepared as a part of the contract. In addition, the QMP shall establish a Quality Assurance (QA) program to confirm that the Quality Control procedures are followed. The Design-Build Firm shall describe how the checking and review processes are to be documented to verify that the required procedures were followed. The QMP may be one utilized by the Design-Build Firm, as part of their normal operation or it may be one specifically designed for the Project. The Design-Build Firm shall submit a QMP within fifteen (15) working days following issuance of the written Notice to Proceed. A marked up set of prints from the Quality Control review will be sent in with each review submittal. The responsible Professional Engineers or Professional Surveyor that performed the Quality Control review, as well as the QA manager, will sign a statement certifying that the review was conducted.

The Design-Build Firm shall, without additional compensation, correct all errors or deficiencies in the surveys, designs, drawings, specifications, and/or other services.

No fabrication, casting, or construction will occur until all related design review and shop drawing review comments are resolved.

2. **Construction:**

The Design-Build Firm shall be responsible for developing and maintaining a Construction Quality Control Plan which describes their Quality Control procedures to verify, check, and maintain control of key construction processes and materials.

The Construction QC Plan will describe the sampling, testing, and reporting of all materials tests that are anticipated to be needed during the construction phase of the Project. The Design-Build Firm will ensure that the requirements of the **City** and **Department** technical standards are met. As the **City** will be performing QA Reviews and Materials Testing as part of their CEI Process, the Design-Build Firm will provide a schedule of all anticipated testing for at least fifteen (15) days prior to any test.

The **City** shall maintain its rights to inspect construction activities and request any documentation from the Design-Build Firm to ensure quality products and services are being provided in accordance with **City** requirements and the Construction QC Plan.

O. Schedule of Values:

The Design-Build Firm will be responsible for invoicing the **City** based on current invoicing policy and procedure. Invoicing will be based on the completion or percentage of completion of major, well-defined tasks as defined in the schedule of values. Final payment will be made upon final acceptance by the **City** of the Design-Build Project. Tracking DBE participation will be required under normal procedures. The Design-Build Firm must submit the schedule of values to the **City** for approval. No invoices shall be submitted prior to **City** approval of the schedule of values.

Upon receipt of the invoice, the **City** Project Manager will make judgment on whether or not work of sufficient quality and quantity has been accomplished by comparing the reported percent complete against actual work accomplished.

Docusign Envelope ID: 127460E9-814A-4E80-A0A5-49A9B4B0BC73

P. Construction Engineering and Inspection:

The **City** is responsible for providing Construction Engineering and Inspection (CEI) and Quality Assurance Engineering.

The Design-Build Firm is subject to the **City's** Independent Assurance (IA) Procedures.

Q. Testing:

The **City** or its representative will perform verification and resolution testing services in accordance with the latest Specifications.

R. Adjoining Construction Projects:

The Design-Build Firm shall be responsible for coordinating construction activities with other construction Projects that are impacted by or impact this Project. This includes Projects under the jurisdiction of local governments, the **City**, or other regional and state agencies.

S. Use of City Owned Right of Way and Easements:

Use of **City** owned Right of Way by the Design-Build Firm for the purpose of equipment or material storage, lay-down facilities, pre-cast material fabrication sites, batch plants for the production of asphalt, concrete or other construction related materials, etc. shall require advance approval by the **City**. Use of **City** owned Right of Way by the Design-Build Firm for these purposes is expressly limited to the Projects contemplated as part of this RFQ.

T. Design Issue Escalation:

All issues are to be directed to the **City** Project Manager. If the issue cannot be resolved at this level the **City** Project Manager shall forward the issue to the next level in the process. The escalation process begins with the **City** Project Manager, followed by the **City** Paving and Drainage Design Section Manager, and, if necessary to the City Engineer. Each level shall have a maximum of seven (7) calendar days (excluding weekends and **City** observed holidays), to answer, resolve or address the issue. The seven (7) calendar days (excluding weekends and **City** observed holidays) period is a response time and does not infer resolution. Questions may be expressed verbally and followed up in writing. The **City** Project Manager will respond in a timely manner but not to exceed seven (7) calendar days (excluding weekends and **City** observed holidays). The Design-Build Firm shall provide any available supporting documentation. The Design-Build Firm shall provide a similar issue escalation process for their organization with personnel of similar levels of responsibility.
The **City** Engineer will have the final authority on design decisions.

U. Construction Clarification, Conflict Resolution, and Issue Escalation:

In the event that construction problems occur, the resolution of those problems will be processed in one of the following two ways unless revised by a Partnering agreement:

1. If the resolution does not change the original intent of the technical proposal/RFQ, then the Design-Build Firm Engineer of Record (EOR) will be responsible for developing the design solution to the construction problem and the **City** Project Manager will be responsible for review and response within ten (10) calendar days (excluding weekends and **City** observed holidays). The **City** Project Manager will either concur with the proposed solution or, if the **City** Project Manager has concerns, the issue will be escalated as described in the process below.
2. If the resolution does alter the original intent of the technical proposal/RFQ then the EOR will develop the proposed solution, and send it to the **City** Project Manager for review and response. The **City** Project Manager will respond to the proposed solution within ten (10)

Docusign Envelope ID: 127460E9-814A-4E80-A0A5-49A9B4B0BC73

calendar days (excluding weekends and **City** observed holidays). The **City** Project Manager will either concur with the proposed solution or the issue will be escalated as described in the process below. Changes to the original intent of the technical proposal/RFQ will require a contract change order.

3. All issues are to be directed to the **City** Project Manager. If the issue cannot be resolved at this level the **City** Project Manager shall forward the issue to the next level in the process. The escalation process begins with the **City** Project Manager, followed by the **City** Construction Management Section Manager, and, if necessary, is escalated to the City Engineer. Each level shall have a maximum of seven (7) calendar days (excluding weekends and **City** observed holidays) to answer, resolve or address the issue. The seven (7) calendar days (excluding weekends and **City** observed holidays) period is a response time and does not infer resolution. Questions may be expressed verbally and followed up in writing. The **City** Project Manager will respond in a timely manner but not to exceed seven (7) calendar days (excluding weekends and **City** observed holidays). The Design-Build Firm shall provide any available supporting documentation.

(Remainder of page intentionally left blank)

Docusign Envelope ID: 127460E9-814A-4E80-A0A5-49A9B4B0BC73

EXHIBIT B

Form 6 – Price Sheet

DO NOT SUBMIT WITH YOUR PROPOSAL

NAME OF CONSULTANT J. B. Coxwell Contracting, Inc.

Proposal Number CDB-0142-23

SCHEDULE OF PROPOSED PRICES/RATES

1. Flat Fee (payable upon completion of project or upon completion of listed deliverables):

TBD

2. If charges are based on hours worked, the hourly direct labor rates (without Fringe Benefits) are:

Principal (Partner or Senior Officer):	$ 125 hr.
Director of Design Build Services (Responsible Professional):	$ 100 hr.
Project Manager	$ 85 hr.
Administrative Assistant	$ 40 hr.
Estimator	$ 75 hr.
Estimating Assistant	$ 55 hr.
Staff Accountant	$ 60 hr.

3. Other Direct Project Costs per Unit (please specify)

Overhead for J. B. Coxwell Contracting, Inc. will be 54.46%

Design Build Fees are listed in the Contract

JBCCI Bond Rate is 1.50%

4. Estimated percentage of total fee to be performed by sub-contractors TBD %

5. Please provide any other relevant rates that may apply to this project including average direct hourly labor rates for other categories of proposed personnel

Above rates are for preconstruction services.

Rates for construction will be detailed in the pricing for individual projects as required.

Additional Sheet for GAI rates attached

Docusign Envelope ID: 127460E9-814A-4E80-A0A5-49A9B4B0BC73

EXHIBIT B

Exhibit A - Page 1 of 1
CONTRACT FEE SUMMARY FOR
GAI Consultants, Inc.

PART I - GENERAL	
1. Project - Federal Funded Misc. DB Contract Contract Rates	**2. Project Number** TBD
3. Name of Consultant GAI Consultants, Inc.	**4. Date of Proposal** 7/17/2024

PART II - LABOR RELATED COSTS

5. DIRECT LABOR	Hourly Rate	Estimated Hours	Estimated Cost	TOTAL
Principal	$ 131.25	0	$ 0.00	
Sr. Project Manager	$ 114.45	0	$ 0.00	
Project Manager	$ 105.00	0	$ 0.00	
Techincal Leader	$ 110.25	0	$ 0.00	
Lead Engineer	$ 97.02	0	$ 0.00	
Senior Project Engineer 2	$ 89.30	0	$ 0.00	
Senior Project Engineer 1	$ 79.70	0	$ 0.00	
Engineer 2	$ 69.20	0	$ 0.00	
Engineer 1	$ 57.98	0	$ 0.00	
Engineer Intern	$ 44.19	0	$ 0.00	
Senior Designer	$ 55.13	0	$ 0.00	
Designer/Sr. CADD Technician	$ 42.01	0	$ 0.00	
LA Director	$ 99.75	0	$ 0.00	
Sr. LA Manager	$ 74.09	0	$ 0.00	
Project LA	$ 64.22	0	$ 0.00	
LA Technician	$ 38.43	0	$ 0.00	
Planning Manager	$ 80.00	0	$ 0.00	
Sr Planner	$ 69.00	0	$ 0.00	
Planner	$ 54.00	0	$ 0.00	
CADD Technician	$ 29.37	0	$ 0.00	
Clerical	$ 29.69	0	$ 0.00	
Survey Manager (PSM)	$ 79.33	0	$ 0.00	
Three Man Survey Crew	$ 110.48	0	$ 0.00	
			TOTAL DIRECT LABOR	**$ -**
6. OVERHEAD (Combined Fringe Benefits & Administrative) Overhead Rate 175.85%				$ -
7. SUBTOTAL: Labor + Overhead (Items 5 & 6)				**$ -**
8. PROFIT: Labor Related Costs (Item 7)			x 10%	$ -
			SUB-TOTAL SALARY RELATED COSTS	**$ -**

PART III - OTHER COSTS

9. MISCELLANEOUS DIRECT COSTS (Lump Sum)	$ -
MISCELLANEOUS DIRECT COSTS SUB-TOTAL	**$ -**
10. SUBCONTRACTS (Lump Sum)	
SUB-CONTRACT SUB-TOTAL	**$ -**

PART IV - SUMMARY

TOTAL LUMP SUM AMOUNT (Items 5, 6, 8, 9 and 10)	**$ -**

Docusign Envelope ID: 127460E9-814A-4E80-A0A5-49A9B4B0BC73

EXHIBIT B

June 8, 2024

Kevin Leadbetter, President
G-A-I CONSULTANTS, INC.
618 East South Street, Suite 700
Orlando, Florida 32801

Dear Mr. Leadbetter:

The Florida Department of Transportation has reviewed your application for prequalification package and determined that the data submitted is adequate to technically prequalify your firm for the following professional services types of work per Rule 14-75, F.A.C.:

2.0	Project Development and Environmental (PD&E) Studies
3.1	Minor Highway Design
3.2	Major Highway Design
3.3	Controlled Access Highway Design
4.1.1	Miscellaneous Structures
4.1.2	Minor Bridge Design
4.2.1	Major Bridge Design - Concrete
5.1	Conventional Bridge Inspection
5.4	Bridge Load Rating
6.1	Traffic Engineering Studies
6.2	Traffic Signal Timing
6.3.1	Intelligent Transportation Systems Analysis and Design
6.3.2	Intelligent Transportation Systems Implementation
7.1	Signing, Pavement Marking and Channelization
7.2	Lighting
7.3	Signalization
8.1	Control Surveying
8.2	Design, Right of Way & Construction Surveying
10.1	Roadway Construction Engineering Inspection
10.3	Construction Materials Inspection
10.4	Minor Bridge & Miscellaneous Structures CEI
10.5.1	Major Bridge CEI - Concrete
10.5.2	Major Bridge CEI - Steel

Docusign Envelope ID: 127460E9-814A-4E80-A0A5-49A9B4B0BC73

13.4 Systems Planning
13.6 Land Planning/Engineering

15.0 Landscape Architect

21.0 Acquisition, Negotiation, Closing, and Order of Taking

24.0 Acquisition Relocation Assistance

Your firm is now technically prequalified with the Department for Professional Services in the above referenced work types. The overhead audit has been accepted, and your firm may pursue projects in the referenced work types with fees of any dollar amount. This status shall be valid until June 30, 2025, for contracting purposes.

Approved Rates

Home Overhead	Field Overhead	Facilities Capital Cost of Money	Premium Overtime	Home Direct Expense	Field Direct Expense
175.85%	136.25%	3.989%	Reimbursed	4.47%	18.09%*

*Rent and utilities excluded from field office rate. These costs will be directly reimbursed on contracts that require the consultant to provide field office.

Per Title 23, U.S. Code 112, there are restrictions on sharing indirect cost rates. Refer to Code for additional information.

Should you have any questions, please feel free to contact me by email at carliayn.kell@dot.state.fl.us or by phone at 850-414-4597.

Sincerely,

Carliayn Kell
Professional Services
Qualification Administrator

Docusign Envelope ID: 127460E9-814A-4E80-A0A5-49A9B4B0BC73

SUBJECT: RFQ for Design Build Services for Federally Funded Horizontal/ Civil Design Build Projects

BID #: CDB-0142-23 **OPEN DATE: 1/24/2024**

COMPETITIVE SEALED PROPOSAL EVALUATION COMMITTEE

KIND AND BASIS OF CONTRACT: CONSTRUCTION – DESIGN/BUILD

AGENCY: DEPARTMENT OF PUBLIC WORKS

BASIS OF AWARD: EVALUATION CRITERIA

NUMBER OF BIDS INVITED: 4 **NUMBER RECEIVED:** 4 **OTHER:** _

SUMMARY OF BIDS AND RECOMMENDED ACTIONS:
Recommend approval of award to enter negotiations with the highest scoring, responsive bidder; J.B Coxwell Contracting for design build services for Federally Funded Horizontal/ Civil Design Build Project.

1. J.B. Coxwell Contracting CO. Inc	121.25
2. Acon Construction CO. Inc	108.25
3. J.D Hinson Company, Inc	103.50

Attachments: Recommendation Memo, Tabulation and Scoring Matrix, Evaluation Criteria

ANALYST Brian Kemp
BENJAMIN KEMP

RESPECTFULLY SUBMITTED
DUSTIN FREEMAN, CHIEF
PROCUREMENT DIVISION

CONCURRENCE BY: Nina Sickler, P.E. Director of Public Works

(ALL AWARD ACTIONS SUBJECT TO LAWFULLY APPROPRIATED FUNDS)
ACTION OF CSPEC COMMITTEE ON RECOMMENDATIONS ABOVE

MEMBERS APPROVING 5 MEMBERS DISAPPROVING 0 DATE: 6/13/2024

OTHER

ACTION OF AWARDING AUTHORITY DATE 6/13/2024

APPROVED ✓ DISAPPROVED:

OTHER:

SIGNATURE OF AUTHENTICATION Karen Bowling

Karen Bowling
Chief Administrative Officer
For: Mayor Donna Deegan
Under Authority Of:
Executive Order No: 2023-02

Docusign Envelope ID: 127460E9-814A-4E80-A0A5-49A9B4B0BC73

Docusign Envelope ID: 127460E9-814A-4E80-A0A5-49A9B4B0BC73
DocuSign Envelope ID: A5AC002D-6967-45AF-81CA-462060EBE780

City of Jacksonville, Florida

A NEW DAY.

Donna Deegan, Mayor

Department of Public Works
Engineering & Construction Management Division
214 N. Hogan Street, 10th Floor
Jacksonville, FL 32202
(904) 255-8762
Jacksonville.gov

May 22, 2024

TO: Dustin Freeman
Chief of Procurement

THRU: Nina Sickler, P.E. DocuSigned by: Nina Sickler
Director of Public Works

FROM: Sheldon Gibbs, P.E DocuSigned by: Sheldon D. Gibbs, P.E.
Acting Chief, Engineering and Construction Management

SUBJECT: CSPEC Approval to Enter into Negotiations Bid #CDB-0142-23
J.B. Coxwell Contracting Co., Inc.
Design Build Services for Federally Funded Horizontal/Civil Design-Build Projects

---

Four proposals received from the City's Request for Qualifications (RFQ.) have been reviewed and ranked. After the final points for the oral interview were graded, the following firms, listed alphabetically, were determined to be the most qualified of those submitted qualifications. The ranking of first, second, and third designates the order of qualification of these firms to perform the required services.

2. Acon Construction Co., Inc.
1. J.B. Coxwell Contracting Co., Inc.
3. J.D. Hinson Company, Inc.

Accordingly, this is to recommend that approval be given to enter into negotiations with J.B. Coxwell Contracting, Inc. Design Build for Design Build Services for Federally Funded Horizontal/Civil Design-Build Projects.

Should you have any questions, please contact Sheldon Gibbs at 904-255-8710.

cc: Daryl Weinstein, Public Works Construction Project Manager
Dan VanSickle, P.E., Professional Engineer

SDG/lw

Docusign Envelope ID: 127460E9-814A-4E80-A0A5-49A9B4B0BC73

FINAL SCORING MATRIX FOR CDB-0142-23 DESIGN BUILD SERVICES FOR FEDERALLY FUNDED HORIZONTAL/ CIVIL DESIGN BUILD PROJECTS

Total Points	30 Points	20 Points	20 Points	10 Points	10 Points	10 Points	20 Points	30 Points	OVERALL	Rank
Vendors	EXPERIENCE & COMPETENCE IN DESIGN & CONSTRUCTION OF SIMILAR JOBS	Past Performance and Record of Professional Accomplishments	AVAILABILITY OF ADEQUATE PERSONNEL	CURRENT WORKLOAD	Overall Willingness to Meet Time and Budget Requirements	Financial Responsibility	QUALITY CONTROL PLANS	INTERVIEW SCORES	Total Points (120 max)	1 THORUGH 4
J.D. HINSON COMPANY										
JOHN BAXTER	25.00	11.00	10.00	7.00	10.00	8.00	15.00	20.00	106.00	
AARON HERIC	27.00	13.00	8.50	9.00	7.00	8.00	18.00	20.00	110.50	2
Average	**26.00**	**12.00**	**9.25**	**8.00**	**8.50**	**8.00**	**16.50**	**20.00**	**108.25**	
ACON CONSTRUCTION CO										
JOHN BAXTER	27.00	12.00	7.00	4.00	10.00	6.00	15.00	20.00	101.00	
AARON HERIC	26.00	12.00	8.00	9.00	6.00	6.00	18.00	21.00	106.00	3
Average	**26.50**	**12.00**	**7.50**	**6.50**	**8.00**	**6.00**	**16.50**	**20.50**	**103.50**	
MCCALL CONSTRUCTION MNGMT										
JOHN BAXTER	24.00	10.00	10.00	7.00	10.00	4.00	15.00	0.00	80.00	
AARON HERIC	26.00	11.00	7.00	6.00	4.00	4.00	16.00	0.00	74.00	4
Average	**25.00**	**10.50**	**8.50**	**6.50**	**7.00**	**4.00**	**15.50**	**0.00**	**77.00**	
J.B COXWELL CONTRACTING										
JOHN BAXTER	28.00	12.00	7.00	5.00	10.00	8.00	15.00	30.00	115.00	
AARON HERIC	30.00	15.50	10.00	10.00	8.00	8.00	20.00	26.00	127.50	1
Average	**29.00**	**13.75**	**8.50**	**7.50**	**9.00**	**8.00**	**17.50**	**28.00**	**121.25**	

Docusign Envelope ID: 127460E9-814A-4E80-A0A5-49A9B4B0BC73

Docusign Envelope ID: 127460E9-814A-4E80-A0A5-49A9B4B0BC73

Docusign Envelope ID: 127460E9-814A-4E80-A0A5-49A9B4B0BC73

rejection of the Response as non-responsive. **Please divide this portion of the Response into subsections that correspond to each of the listed criteria.**

Attachment B
Evaluation Matrix

Upon approval of the ranking of DBF responses under each category, the City shall conduct oral interviews for the three top ranked firms in accordance with Section 287.055, F.S. The QES will again serve as the selection committee under the auspices of CSPEC. The three top-ranked Design-Build Firms shall also be scheduled to make presentations before CSPEC, in its sole discretion, regarding their qualifications, organization, development documents, and ability to furnish the required design-build services in accordance with Section 287.055, F.S. and Chapter 126, Part 7.

At the conclusion of the ranking process, the City intends to select the top-ranked DBF as specified within this RFQ. The City intends to contract with the top-ranked DBF.

The City reserves its right to terminate the design build solicitation for any proposed project and transfer it for execution through the design-bid-build delivery method.

A DBF selected to receive a DCP for a specific project shall be required to retain all employees, consultants, sub-consultants, contractors, sub-contractors, and suppliers necessary for the proper execution of the project as it has been listed in the DBF SOQ submitted in response to this solicitation unless otherwise agreed between the parties and approved by the City.

EVALUATION CRITERIA:

I. **EXPERIENCE, COMPETENCE IN, AND APPROACH TO SIMILAR DESIGN-BUILD PROJECTS (ABILITY OF PROFESSIONAL PERSONNEL). (30 Point Value)**
Provide concise information pertaining to professional qualifications, experience, and competence of the Design Build Team or individual firms of the Design Build Team as follows:

1. Identify the lead organization and primary members of the Design Build Team. Name the DBF with whom the City will be contracting and identify if this will be a partnership, corporation, joint venture, etc.
2. Provide an organizational chart of the DBF team describing the role and responsibilities of each team member. Identify all team members that are pre-qualified by the City as a Jacksonville Small Emerging Business.
3. Provide proof of insurance and bonding capacity adequate to complete projects. (Appendix item)
4. Provide proof of licensing including occupational license tax for all business entities and individual professional members of the DBF team. (Appendix item)
5. The DBF team must include at a minimum the following Key Individuals in order for the SOQ to be deemed technically responsive. Identify the Key Individuals and the business entities (firms) by which those individuals are employed. Provide a clear definition of the role and responsibility of each Key Individual relative to the member firm.
   i. Project Principal – The Project Principal (Director) shall be the primary person in charge of and responsible for delivery of the Project in accordance with the Design Build Contract requirements. The Project Principal must have full authority to make the final decisions on behalf of the DBF and have responsibility for communicating these decisions to the City of Jacksonville, Florida. The Project Principal must have at least ten (10) years of requisite experience and provide at least five representative projects.
   ii. Lead Design Professional – The Lead Design Professional shall be in charge of and responsible for all aspects of the design of the Project and shall be a Florida Registered Engineer or Architect or Landscape Architect. The Lead Design Professional shall have a minimum of ten (10) years of post-registration experience in design of similar public or private facility projects, including five (5) years of supervisory experience. The Lead Design Professional shall have coordination and project management responsibilities over the Project Design Team.
   iii. Specialty Design Engineer, Architect, and Landscape Architect – The Specialty Design Engineers

Docusign Envelope ID: 127460E9-814A-4E80-A0A5-49A9B4B0BC73

such as Civil, Traffic, Drainage, Structural, Electrical, as well as any other necessary design professional shall comprise the Project Design Team and be responsible for preparation of construction drawings, calculations and specifications in their respective specialty. Each Specialty Engineer and other design professional shall be licensed in the State of Florida with at least five (5) years of post-registration design experience. Each design professional shall provide at least five representative projects.

iv. Construction Manager – The Construction Manager shall report directly to the Project Principal and shall be responsible for the overall coordination of projects at each location including participation in the design and primary on-site responsibility for construction. The Construction Manager shall have at least five years' experience in this role and provide at least five representative projects while serving as a Construction Manager or Site Superintendent.

v. Design Quality Control Manager – The Design Quality Control Manager shall be responsible for assuring that the design of each project is in compliance with the requirements of the Design Build Contract. The Design Quality Control Manager shall be a Professional Engineer, Registered Architect, or Registered Landscape Architect licensed in the State of Florida and shall report directly to the Project Principal. The Design Quality Control Manager shall have at least 10 years of post-registration experience in design and construction. The Design Quality Control Manager will provide at least three (3) examples of requisite experience in this role.

vi. Construction Quality Control Manager – The Construction Quality Control Manager shall be responsible for assuring that all workmanship and materials are in compliance with the Design Build Contract Requirements. The Construction Quality Control Manager shall have at least ten (10) years of experience in building construction, utility construction, or other representative experience related to the project type offering. The Construction Quality Control Manager will provide at least three (3) examples or requisite experience in this role.

6. All members and personnel of the Design Build Project Team shall hold licenses required for performing work on a specific project under the State of Florida or the City of Jacksonville law and ordinances including occupational tax licenses.
7. Provide information demonstrating that the DBF personnel possess the required minimum qualifications specified in Item 5.
8. Design Build Firm's design team shall have the necessary equipment and personnel to provide the design plans and specifications in a timely manner.
9. Provide one-page resumes of the Key Individuals and other personnel that the Design Builder considers critical to the successful completion of the Project including all team members discussed above in the appendix.
10. Modification to the Design Build Firm's Team or Key Individuals and other personnel listed above is discouraged. The City will not approve requests for modification without justification. Examples of justification include changes in employment status, bankruptcy, inability to perform, organizational conflict of interest, or death of a team member. Replacement team members must be submitted to the City for approval demonstrating equivalent experience to the individual being replaced.
11. For the Project Principal, Lead Design Engineer, and Construction Manager compose a list of projects that they managed in the past. Each list shall consist of a brief description of the projects managed by each of them, name of the owner the work was performed for, the owner's representative's telephone number, total construction cost, duration of construction, and any unusual features.

II. PAST PERFORMANCE AND RECORD OF PROFESSIONAL ACCOMPLISHMENTS (20 Point Value).

Provide concise information describing:

1. For the DBF including the Design Build team, provide information demonstrating the firm's qualifications for performing work included in this RFQ. The information shall consist of a list of project experience in the past five (5) years, including year(s) of design and/or construction experience. Provide a separate list of design and construction projects performed by members of the DBF team for the City. (This information may be included in the appendices and will not be counted against the 25-page limit.)
2. For each project listed, provide:

Docusign Envelope ID: 127460E9-814A-4E80-A0A5-49A9B4B0BC73

a. A brief description of the project,
b. Name of owner for whom the work was performed,
c. Name, title, and phone numbers of owner's representatives who can verify and discuss the firm's participation in these projects.
(This information may be included in the appendices and will not be counted against the 25-page limit.)

3. Provide brief answers and explanations to the following questions:
   a. Has any member of the DBF team defaulted and/or been terminated on any project within the last (5) years?
   b. In the past five (5) years, has any member of the DBF team been suspended, debarred, disqualified from bidding, or declared ineligible for work by any entity or are any such action pending against them?
   c. How many contract claims were submitted in the past five (5) years by members of the DBF team and how were they resolved?
   d. Does any member of the DBF team have active projects that are behind schedule? If so, why are the projects behind schedule?
   e. Has any member of the DBF team been assessed erosion and sediment control violations and/or fines within the last five (5) years?
   f. Within the last five (5) years, how many projects were constructed by the Design Builder's team that were completed three (3) or more months before the target completion date of these projects? Provide details.
4. Provide the current National Council on Compensation Insurance (NCCI) Experience Modification Rate (EMR) for each DBF team member and all major sub-contractors. Note that the minimum acceptable EMR rating cannot exceed 1.0. If the EMR rating submitted is more than 1.0, the respondent will be regarded as nonresponsive.
5. Provide DBF safety goals for the Project.

III. AVAILABILITY OF ADEQUATE PERSONNEL, EQUIPMENT, AND FACILITIES (20 Point Value).

Provide concise information pertaining to the DBF team's ability to provide adequate personnel, equipment, and facilities in order to provide required design, construction, and quality control services for the Project:

1. Provide the Team Organizational Chart listing available personnel, equipment, and facilities in the design, construction, and quality control activities.
2. Demonstrate the team's ability to commit necessary resources to successfully complete the Project.
3. Demonstrate project team's leadership capability and relevant management experience for the design, construction, and quality control requirements of the Project.

IV. RECENT, CURRENT AND PROJECTED WORKLOAD (10 Point Value)

Provide the number and size of the projects currently being performed. Discuss past ability to deliver projects on a timely basis under similar current workload conditions.

V. OVERALL WILLINGNESS TO MEET BOTH TIME AND BUDGET REQUIREMENTS FOR THE PROJECTS (10 Point Value).

In an effort to remain consistent with Chapter 287, Florida Statutes, responding to this evaluation criterion necessitates that a proposer include statements and references demonstrating that the proposer met both time and budget requirements on projects of similar size and scope that were completed by the proposer within the past three years and that the proposer is meeting both time and budget requirements on projects of similar size and scope that are currently being performed by the proposer ("Reference Projects"). As part of its response to this evaluation criterion, the proposer:

1. must submit an expressed statement of its overall willingness to meet both time and budget requirements for the project in question; and
2. should submit, without limitation, project narratives, schedules, design and construction cost and fee summaries and owner references for any Reference Projects. Any Reference Project which has been completed or for which construction is underway will segregate and identify any design-

Docusign Envelope ID: 127460E9-814A-4E80-A0A5-49A9B4B0BC73

related schedule or budget impacts. Design schedule and budget information will include both the original and the current or completed schedule and cost data.

During contract negotiations, successful proposers will be required to provide a Schedule of Proposed Rates on the forms provided as "Form 6". Such rates and costs will be used in the negotiation of fees and shall remain in effect throughout the length of the contract, except - **at the sole discretion of the City** - such rates may be adjusted when an amendment to the original agreement is being negotiated; provided any increases in rates shall not exceed actual increases in the appropriate index (CPI or PPI) for the service being provided since the date of the Original Agreement (Contract). Any allowable rate adjustments for subconsultants shall also follow this procedure.

Schedule A is provided in the RFQ for information only. **Do not return this form with your proposal.**

Proposed overhead rate is limited to 175% of direct labor. Proposed overhead rates in excess of 175% shall conform to Federal Acquisition Regulations as established by a governmental audit certified to by a Certified Public Accountant. However, under no circumstances shall the overhead rate exceed 200%. Profit rate shall only be applied to direct labor plus overhead. No mark-up or profit shall be paid on non labor related costs, reimbursables or on services provided by subconsultants or others.

VI. FINANCIAL RESPONSIBILITY (10 Point Value)

Provide concise information pertaining to the DBF team's financial responsibility:

A. Indicate the DBF form of business, e.g., corporation, partnership, joint venture, or sole proprietor. Provide information about years in business, change in ownership, bank references, and any other information the DBF may wish to submit to allow the City to verify financial responsibility of each member of the DBF team.

B. Provide the latest DBF Dunn & Bradstreet rating, and financial statement including current balance sheet, and a bank letter indicating the status of all accounts for each principal entity in the DBF team.

C. For a joint venture, provide pertinent complete financial information for each joint venture partner.

D. Disclose any unpaid judgments in excess of $100,000.

E. Disclose any disputed or un-adjudicated claims in excess of $500,000.

F. If the DBF or a Partner in the Joint Venture requires any financial information to be held in confidence, such information shall be submitted in sealed envelopes.

G. Provide evidence that the DBF current bonding capacity is at least $6,000,000. This evidence shall be in the form of a commitment letter from a licensed bonding company (surety).

H. The DBF (and joint venture partners) shall provide a comparison of the anticipated gross monthly billings for the next twelve months for uncompleted work presently under contract, with monthly gross billings for design and construction over the past 24 months.

VII. QUALITY CONTROL PLAN (DESIGN & CONSTRUCTION) (20 Point Value)

The Quality Control Program is a critical component of the design and construction of the Project. It represents assurances to the City that the DBF is executing in accordance with the contract documents. The City will provide the quality assurance and independent testing, but the established Quality Control Program is the backbone for which the City will gauge compliance. The City shall negotiate the provisions of the acceptable Quality Control Program and finalize it prior to contract award.

Describe how the DBF proposes to incorporate the City's quality assurance requirements into his/her Quality Control Program.

The City's quality assurance requirements consist of the following elements: (a) Design Reviews by the Public Works Department, using agency, and/or design consultants hired by the City at the 30%, 60%, 90%, and 100% design completion stages or as determined by the City's PM; (b) Permits and Inspections

Docusign Envelope ID: 127460E9-814A-4E80-A0A5-49A9B4B0BC73

required by local, state, and Federal regulatory agencies; (c) Reviews and Approvals by Utility Companies; (d) Submittal Reviews by the Department of Public Works or designated consultant; (e) Regular Construction Inspections performed by the Department of Public Works or designated consultant; and (f) Construction Material Testing conducted by the City's Testing Consultant.

VIII. ORAL INTERVIEWS (30 Point Value)

The Oral Interviews will have an additional value of thirty (30) points which will be added to the DBF Score from the evaluation of the SOQ. The three top-ranked DBFs from the SOQ Evaluation Process will be provided the criteria and scheduling information for the Oral Interviews. Final Ranking of the top three firms will be based upon the combination of scores combined from the SOQ Evaluation and the Evaluation of the Oral Interviews.

Qualifications	10
Approach to and Schedule for the Project	5
Project Organization	5
Development Documents	5
Ability to Furnish Required Design-Build Services	5

IX. SOQ POINT VALUE FOR EACH EVALUATION CRITERION

The maximum number of points as shown below may be awarded by the QES of the CSPEC to the DBF based on verifiable information provided in the SOQ for each evaluation category listed and described herein. Failure to provide adequate information on any criterion will result in lower scores and could result in rejection of the Statement of Qualification as non-responsive.

The responses to each of the criterion will be evaluated relative to other responses received and awarded a score as listed in the table on the next page.

Item in Attach B	Item's Title	Maximum Number of Points
I	Experience, competence in and approach to the design and construction of various similar design-build projects	15 (Design) 15 (Constr)
II	Past professional accomplishments and performance	10 (Design) 10 (Constr)
III	Availability of adequate personnel, equipment, and facilities	10 (Design) 10 (Constr)
IV	Recent, Current, and Future Workload	5 (Design) 5 (Constr)
V	Overall willingness to meet time and budget requirements for the projects	10
VI	Financial responsibility	10
VII	Quality control plan (design & construction)	10 (Design) 10 (Constr)
VIII	Oral Interviews	30
Maximum Score		**150**

(Remainder of page intentionally left blank)

Docusign Envelope ID: 127460E9-814A-4E80-A0A5-49A9B4B0BC73

Docusign Envelope ID: 127460E9-814A-4E80-A0A5-49A9B4B0BC73

SUBJECT: RFQ for Design Build Services for Federally Funded Horizontal/ Civil Design Build Projects

BID #: CDB-0142-23 **OPEN DATE: 1/24/2024**

COMPETITIVE SEALED PROPOSAL EVALUATION COMMITTEE

KIND AND BASIS OF CONTRACT: CONSTRUCTION – DESIGN/BUILD

AGENCY: DEPARTMENT OF PUBLIC WORKS

BASIS OF AWARD: EVALUATION CRITERIA

NUMBER OF BIDS INVITED: 4 **NUMBER RECEIVED:** 4 **OTHER:** _

SUMMARY OF BIDS AND RECOMMENDED ACTIONS:

Public Works received and evaluated four (4) responses for the Request for Qualifications. Recommend approval to proceed with oral interviews with the top three (3) highest scoring firms listed below:

1. J.B. Coxwell Contracting, Inc	93.25
2. J.D. Hinson Company	88.25
3. Acon Construction Co., Inc	83.00

Attachments: Recommendation Memo, Tabulation and Scoring Matrix, Evaluation Criteria

ANALYST _____ BENJAMIN KEMP

RESPECTFULLY SUBMITTED _____ DUSTIN FREEMAN, CHIEF PROCUREMENT DIVISION

CONCURRENCE BY: Nina Sickler, P.E. Director of Public Works

(ALL AWARD ACTIONS SUBJECT TO LAWFULLY APPROPRIATED FUNDS)

ACTION OF CSPEC COMMITTEE ON RECOMMENDATIONS ABOVE

MEMBERS APPROVING 5 MEMBERS DISAPPROVING 0 DATE: 4/4/2024

OTHER _____

ACTION OF AWARDING AUTHORITY DATE 4/8/2024

APPROVED ✓ DISAPPROVED: _____

Karen Bowling
Chief Administrative Officer
For: Mayor Donna Deegan
Under Authority Of:
Executive Order No. 2023-02

OTHER: _____

SIGNATURE OF AUTHENTICATION _____

Docusign Envelope ID: 127460E9-814A-4E80-A0A5-49A9B4B0BC73

Attachment A
Response Format

To maintain comparability and facilitate the evaluation process, Responses shall be organized in the manner set forth below. Tab delineations for each of the sections would be helpful.The SOQ shall be a formal response to the RFQ from the DBF. The DBF must submit its SOQ by the time and date as shown in the RFQ Project Schedule (Section 1.16). **Each respondent will clearly indicate within the Cover Letter that your response is for the Federally Funded Horizontal/Civil Design-Build Contract.**

The SOQ shall contain no more than twenty-five (25) single-sided double-spaced 8½" by 11" pages, excluding appendices. The font style shall be Arial with a minimum font size of 11 points. A single-page cover letter will not be counted as part of the 25-page limit. A cover letter in excess of one page and any other information submitted beyond that noted in the RFQ will be counted as part of the 25-page limit. Any SOQ exceeding these formal guidelines will be rejected by the City. Provide proof of insurance, bonding capacity, and licensing. Copies of these documents may be included as appendices and will not be counted against the 25-page limit.

1) **Title Page:** Include RFQ Title, RFQ Number, Contractor's full name, address, phone number.

2) **Cover Letter:** Include the following:
   - Date of Letter.
   - RFQ Title and Number.
   - Contractor's full name, address and phone number.
   - Names of the persons who will be authorized to make representations for the Contractor, their titles, addresses **(including email address)** and telephone numbers.
   - Contractor's Federal Employer ID Number.
   - Acknowledgement that (i) the Response is based on the terms set forth in the RFQ and all amendments thereto posted on Buyer's website as of the date of the Response, and (ii) the Contractor will be responsible for monitoring Buyer's website for subsequent amendments and for either maintaining, amending or withdrawing the Response prior to the Response Due Date based on those subsequent amendments.
   - Signature of Authorized Representative.

3) **Required Forms.** Attach all forms identified in Section 1 or in Attachments C or F, each signed by an authorized representative. The forms that are required include:
   - All issued addenda (if applicable). Addenda must be signed and dated.
   - Form 1- Conflict of Interest Certificate
   - Form 2 - Proposal Bonds
   - Form 6 - Lobbying (Federal Form)
   - Attachment C - Equal Business Opportunity Program Forms
   - Attachment H - Ex- Offenders Form

4) **Proof of Minimum Requirements.** Responses will ONLY be accepted from companies meeting the minimum requirements in Section 1 of the RFQ. Contractor must provide clear documentation that they meet the minimum requirements.

5) **Statement of Qualifications.** This portion of the Response will be used to provide the information Buyer needs to evaluate how well the Contractor meets the criteria listed in Attachment B - Evaluation Criteria. Failure to provide adequate information on any criterion will result in lower scores and could result in

Design/Build Firm: JB Coxwell Contracting		
Grading Committee Member: Aaron Heric		
Design- Build Services for Federally Funded Horizontal/ Civil Design Build Projects		
DATE: 5/9/2024		
QUALIFICATIONS	**(10-Pts Max)**	**Points Earned**
Very qualified	10	**9**
Moderately Qualified	5	
Low Qualifications	1	
APPROACH & SCHEDULE	**(10-Pts Max)**	**Points Earned**
Detailed approach meeting schedule	10	**8**
Good general approach meeting schedule	5	
General approach meeting schedule	1	
PROJECT ORGANIZATION DEVELOPMENT AND ABILITY TO DELIVER D/B SERVICES FOR Federally Funded Horizontal/ Civil Design Build Projects	**(10-Pts Max)**	**Points Earned**
Very organized project development and able to deliver D/B services	10	**9**
Moderately organized and able to deliver D/B services	5	
	Total Points	**26**

Docusign Envelope ID: 127460E9-814A-4E80-A0A5-49A9B4B0BC73

Docusign Envelope ID: 127460E9-814A-4E80-A0A5-49A9B4B0BC73

Design/Build Firm: J.D Hinson Company		
Grading Committee Member: Aaron Heric		
Design- Build Services for Federally Funded Horizontal/ Civil Design Build Projects		
DATE: 5/9/2024		
QUALIFICATIONS	(10-Pts Max)	Points Earned
Very qualified	10	8
Moderately Qualified	5	
Low Qualifications	1	
APPROACH & SCHEDULE	(10-Pts Max)	Points Earned
Detailed approach meeting schedule	10	5
Good general approach meeting schedule	5	
General approach meeting schedule	1	
PROJECT ORGANIZATION DEVELOPMENT AND ABILITY TO DELIVER D/B SERVICES FOR Federally Funded Horizontal/ Civil Design Build Projects	(10-Pts Max)	Points Earned
Very organized project development and able to deliver D/B services	10	7
Moderately organized and able to deliver D/B services	5	
	Total Points	20

Docusign Envelope ID: 127460E9-814A-4E80-A0A5-49A9B4B0BC73

Docusign Envelope ID: 127460E9-814A-4E80-A0A5-49A9B4B0BC73

Design/Build Firm: ACON Construction Company		
Grading Committee Member: Aaron Heric		
Design- Build Services for Federally Funded Horizontal/ Civil Design Build Projects		
DATE: 5/9/2024		
QUALIFICATIONS	(10-Pts Max)	Points Earned
Very qualified	10	7
Moderately Qualified	5	
Low Qualifications	1	
APPROACH & SCHEDULE	(10-Pts Max)	Points Earned
Detailed approach meeting schedule	10	7
Good general approach meeting schedule	5	
General approach meeting schedule	1	
PROJECT ORGANIZATION DEVELOPMENT AND ABILITY TO DELIVER D/B SERVICES FOR Federally Funded Horizontal/ Civil Design Build Projects	(10-Pts Max)	Points Earned
Very organized project development and able to deliver D/B services	10	7
Moderately organized and able to deliver D/B services	5	
	Total Points	21

Docusign Envelope ID: 127460E9-814A-4E80-A0A5-49A9B4B0BC73

Docusign Envelope ID: 127460E9-814A-4E80-A0A5-49A9B4B0BC73

John M. Baxter
May 10, 2024

Design/Build Firm: JB Coxwell Contracting		
Grading Committee Member:		
Design- Build Services for Federally Funded Horizontal/ Civil Design Build Projects		
DATE: 5/9/2024		
QUALIFICATIONS	**(10-Pts Max)**	**Points Earned**
Very qualified	10	**10**
Moderately Qualified	5	
Low Qualifications	1	
APPROACH & SCHEDULE	**(10-Pts Max)**	**Points Earned**
Detailed approach meeting schedule	10	**10**
Good general approach meeting schedule	5	
General approach meeting schedule	1	
PROJECT ORGANIZATION DEVELOPMENT AND ABILITY TO DELIVER D/B SERVICES FOR Federally Funded Horizontal/ Civil Design Build Projects	**(10-Pts Max)**	**Points Earned**
Very organized project development and able to deliver D/B services	10	**10**
Moderately organized and able to deliver D/B services	5	
	Total Points	**30**

Docusign Envelope ID: 127460E9-814A-4E80-A0A5-49A9B4B0BC73

John M. Baxter
May 10, 2024

Design/Build Firm: J.D Hinson Company		
Grading Committee Member:		
Design- Build Services for Federally Funded Horizontal/ Civil Design Build Projects		
DATE: 5/9/2024		
QUALIFICATIONS	(10-Pts Max)	Points Earned
Very qualified	10	10
Moderately Qualified	5	
Low Qualifications	1	
APPROACH & SCHEDULE	(10-Pts Max)	Points Earned
Detailed approach meeting schedule	10	
Good general approach meeting schedule	5	5
General approach meeting schedule	1	
PROJECT ORGANIZATION DEVELOPMENT AND ABILITY TO DELIVER D/B SERVICES FOR Federally Funded Horizontal/ Civil Design Build Projects	(10-Pts Max)	Points Earned
Very organized project development and able to deliver D/B services	10	
Moderately organized and able to deliver D/B services	5	5
	Total Points	20

Docusign Envelope ID: 127460E9-814A-4E80-A0A5-49A9B4B0BC73

John M. Baxter
May 10, 2024

Design/Build Firm: ACON Construction Company		
Grading Committee Member:		
Design- Build Services for Federally Funded Horizontal/ Civil Design Build Projects		
DATE: 5/9/2024		
QUALIFICATIONS	(10-Pts Max)	Points Earned
Very qualified	10	10
Moderately Qualified	5	
Low Qualifications	1	
APPROACH & SCHEDULE	(10-Pts Max)	Points Earned
Detailed approach meeting schedule	10	
Good general approach meeting schedule	5	5
General approach meeting schedule	1	
PROJECT ORGANIZATION DEVELOPMENT AND ABILITY TO DELIVER D/B SERVICES FOR Federally Funded Horizontal/ Civil Design Build Projects	(10-Pts Max)	Points Earned
Very organized project development and able to deliver D/B services	10	
Moderately organized and able to deliver D/B services	5	5
	Total Points	20

Docusign Envelope ID: 127460E9-814A-4E80-A0A5-49A9B4B0BC73

Docusign Envelope ID: 127460E9-814A-4E80-A0A5-49A9B4B0BC73

Docusign Envelope ID: 127460E9-814A-4E80-A0A5-49A9B4B0BC73

SUBJECT: RFQ for Design Build Services for Federally Funded Horizontal/ Civil Design Build Projects

BID #: CDB-0142-23 **OPEN DATE: 1/24/2024**

JACKSONVILLE PROCUREMENT AWARDS COMMITTEE

KIND AND BASIS OF CONTRACT: CONSTRUCTION – DESIGN/BUILD

AGENCY: DEPARTMENT OF PUBLIC WORKS

BASIS OF AWARD: EVALUATION CRITERIA

NUMBER OF BIDS INVITED: 4 **NUMBER RECEIVED:** 4 **OTHER:** _

SUMMARY OF BIDS AND RECOMMENDED ACTIONS:

Recommend approval to amend and correct the initial award cover to reflect scoring of the 2nd place bidder and 3rd place bidder. J.D Hinson Company scored 108.25 and should be the second highest scoring bidder. Acon Construction CO. Inc scored 103.50 and should be the third highest ranked bidder.

1. J.B. Coxwell Contracting CO. Inc	121.25
2. J.D Hinson Company, Inc	108.25
3. Acon Construction CO. Inc.	103.50

Attachments: Bid Tabulation, Correction communication, Previous award

ANALYST _____ BENJAMIN KEMP

RESPECTFULLY SUBMITTED _____ DUSTIN FREEMAN, CHIEF PROCUREMENT DIVISION

CONCURRENCE BY: Nina Sickler, P.E. Director of Public Works

(ALL AWARD ACTIONS SUBJECT TO LAWFULLY APPROPRIATED FUNDS)

ACTION OF JPAC COMMITTEE ON RECOMMENDATIONS ABOVE

MEMBERS APPROVING 3 MEMBERS DISAPPROVING 0 DATE: 7/11/2024

Anna Brosche _____ OTHER _____

_____ _____

_____ _____

ACTION OF AWARDING AUTHORITY DATE 7/11/2024

APPROVED ✓ DISAPPROVED: _____

OTHER: _____

SIGNATURE OF AUTHENTICATION _____

Karen Bowling
Chief Administrative Officer
For: Mayor Donna Deegan
Under Authority Of:
Executive Order No: 2023-02

Docusign Envelope ID: 127460E9-814A-4E80-A0A5-49A9B4B0BC73

FINAL SCORING MATRIX FOR CDB-0142-23 DESIGN BUILD SERVICES FOR FEDERALLY FUNDED HORIZONTAL/ CIVIL DESIGN BUILD PROJECTS

Total Points	30 Points	20 Points	20 Points	10 Points	10 Points	10 Points	20 Points	30 Points	OVERALL	Rank
Vendors	EXPERIENCE & COMPETENCE IN DESIGN & CONSTRUCTION OF SIMILAR JOBS	Past Performance and Record of Professional Accomplishments	AVAILABILITY OF ADEQUATE PERSONNEL	CURRENT WORKLOAD	Overall Willingness to Meet Time and Budget Requirements	Financial Responsibility	QUALITY CONTROL PLANS	INTERVIEW SCORES	Total Points (120 max)	1 THORUGH 4
J.D. HINSON COMPANY										
JOHN BAXTER	25.00	11.00	10.00	7.00	10.00	8.00	15.00	20.00	106 00	
AARON HERIC	27 00	13.00	8.50	9.00	7.00	8.00	18.00	20.00	110 50	2
Average	26.00	12.00	9.25	8.00	8.50	8.00	16.50	20.00	108.25	
ACON CONSTRUCTION CO										
JOHN BAXTER	27.00	12 00	7.00	4 00	10.00	6.00	15.00	20.00	101 00	
AARON HERIC	26.00	12 00	8.00	9 00	6.00	6.00	18.00	21 00	106.00	3
Average	26.50	12.00	7.50	6.50	8.00	6.00	16.50	20.50	103.50	
MCCALL CONSTRUCTION MNGMT										
JOHN BAXTER	24.00	10.00	10 00	7.00	10.00	4.00	15.00	0.00	80.00	
AARON HERIC	26.00	11.00	7.00	6.00	4.00	4.00	16.00	0.00	74.00	4
Average	25.00	10.50	8.50	6.50	7.00	4.00	15.50	0.00	77.00	
J.B COXWELL CONTRACTING										
JOHN BAXTER	28.00	12.00	7.00	5.00	10.00	8.00	15.00	30.00	115.00	
AARON HERIC	30.00	15.50	10.00	10.00	8.00	8 00	20.00	26.00	127.50	1
Average	29.00	13.75	8.50	7.50	9.00	8.00	17.50	28.00	121.25	

Docusign Envelope ID: 127460E9-814A-4E80-A0A5-49A9B4B0BC73

Docusign Envelope ID: 127460E9-814A-4E80-A0A5-49A9B4B0BC73

Docusign Envelope ID: 127460E9-814A-4E80-A0A5-49A9B4B0BC73

Kemp, Benjamin - AFPS

From: David Hinson <david@jdhinson.com>
Sent: Thursday, June 27, 2024 4:42 PM
To: Kemp, Benjamin - AFPS
Cc: Katie Hinson
Subject: CDB-0142-23
Attachments: ggac-cspec-package^J-june-13^J-2024.pdf

EXTERNAL EMAIL: This email originated from a non-COJ email address. Do not click any links or open any attachments unless you trust the sender and know the content is safe.

Ben – please see attached. The summary on first page shows our company placing 3rd. However the scoring sheet on page 3 shows our company placing 2nd. Can this 1st page summary be corrected, showing us in 2nd place with 108.25 points and not 3rd place with 103.5 points?

Thanks,
David

J. D. Hinson Company
David Hinson
904-334-0066
david@jdhinson.com
CGC 062284
CUC 1224922

Docusign Envelope ID: 127460E9-814A-4E80-A0A5-49A9B4B0BC73

Docusign Envelope ID: 127460E9-814A-4E80-A0A5-49A9B4B0BC73

SUBJECT: RFQ for Design Build Services for Federally Funded Horizontal/ Civil Design Build Projects

BID #: CDB-0142-23 **OPEN DATE: 1/24/2024**

COMPETITIVE SEALED PROPOSAL EVALUATION COMMITTEE

KIND AND BASIS OF CONTRACT: CONSTRUCTION – DESIGN/BUILD

AGENCY: DEPARTMENT OF PUBLIC WORKS

BASIS OF AWARD: EVALUATION CRITERIA

NUMBER OF BIDS INVITED: 4 **NUMBER RECEIVED:** 4 **OTHER:** _

SUMMARY OF BIDS AND RECOMMENDED ACTIONS:
Recommend approval of award to enter negotiations with the highest scoring, responsive bidder; J.B Coxwell Contracting for design build services for Federally Funded Horizontal/ Civil Design Build Project.

1. J.B. Coxwell Contracting CO. Inc	121.25
2. Acon Construction CO. Inc	108.25
3. J.D Hinson Company, Inc	103.50

Attachments: Recommendation Memo, Tabulation and Scoring Matrix, Evaluation Criteria

ANALYST BENJAMIN KEMP

RESPECTFULLY SUBMITTED DUSTIN FREEMAN, CHIEF PROCUREMENT DIVISION

CONCURRENCE BY: Nina Sickler, P.E. Director of Public Works

(ALL AWARD ACTIONS SUBJECT TO LAWFULLY APPROPRIATED FUNDS)
ACTION OF CSPEC COMMITTEE ON RECOMMENDATIONS ABOVE

MEMBERS APPROVING 5 MEMBERS DISAPPROVING 0 DATE: 6/13/2024

OTHER _____

ACTION OF AWARDING AUTHORITY DATE 6/13/2024

APPROVED ✓ DISAPPROVED: _____

OTHER: _____

SIGNATURE OF AUTHENTICATION Karen Bowling

Karen Bowling
Chief Administrative Officer
For: Mayor Donna Deegan
Under Authority Of:
Executive Order No: 2023-02

Docusign Envelope ID: 127460E9-814A-4E80-A0A5-49A9B4B0BC73