Docusign Envelope ID: 89F51965-5845-41EE-92A2-D6C7ACC47E7E

City of Jacksonville, Florida
Procurement Award Form (PAF)

Part 1: Form Type JPAC Award Request and Administrative Details

Goods and/or Services: SC-0419-22 Purchase of International MV607 w/Grapple Loader

Requested Action/Authority:

Recommend approval to utilize the second renewal option with Cumberland International Trucks of Florida, LLC. Period of service is October 1, 2024 through September 30, 2025. Revised annual expenditure amount of $378,374.00. Total expenditure not to exceed $901,144.00.

Justification/Explanation:

Purchase of Internationa MV607 Loader w/Grapple

Legal Contract #:	N/A	Contract Date:	10/3/2024	Change Order/AMD #:	0	
PO/Release #:	N/A	Bid Date:	9/1/2022	Awarded Supplier:	Cumberland International Trucks of Flori	
Licenses Verified:	N/A	Effective Date:	10/03/2024	Basis of Award:	LPTA	
Federally Funded:	N/A	No. Invited:	11	Responses Received:	2	Attachments:
Solicitation:	ITB - SC-0419 - 22			Procurement Contract #:	POA - 72036-22	
Executed By:	N/A					

PoP:Base:	N/A	Options:	2	Extension(s):	N/A
JSEB Rec.:	Encouragement	%:	0	Bonds Waived Pursuant To:	N/A

Fund:	51102	Center:	114001	Acct:	564010	Proj:	000000	Activity:	00000499	$	378,374.00
Fund:		Center:		Acct:		Proj:		Activity:		$	
Fund:		Center:		Acct:		Proj:		Activity:		$	

New NTE/GMP:	$ 901,144.00	Contingent Amount:	$ 0	DMP/ODPO Amount:	$ 0

Using Agency/BU:	AFFM:FLEET_MANAGEMENT			
Concurrence:	Signed by: Tangel, Crisencio BDCC6BD1A63A4F7...	Title:	CHIEF OF FLEET MANAGEMENT	9/24/2024
Concurrence:		Title:		
Concurrence:		Title:		
Concurrence:		Title:		

Procurement Analyst/Buyer:	Signed by: Warchol, LeeAnn 72F42AB443D04B7...	Chief of Procurement:	DocuSigned by: B19F1D517352456... 10/1/2024
Name:	Warchol, LeeAnn	Name:	Dustin L. Freeman

Part 2: JPAC Actions on Above Requests/Recommendations
All Award Actions Subject to Lawfully Appropriated Funds

Members Who Approve:	
Members Who Disapprove:	
Other Action:	

Date:

Part 3: Final Awarding Authority Action

Action:

Date:

Signature:

Docusign Envelope ID: 89F51965-5845-41EE-92A2-D6C7ACC47E7E

PAF Instructions

Form Type: Select the type of award from the dropdown options. This form will be used for all Procurement awards (Administrative Awards and JPAC Requests).

Goods and/or Services: Enter a brief description of the types of goods and services included in the request.

Requested Action/Authority: Enter a brief description of the requested action or authority being sought. i.e.; *request permission to award to the lowest, responsive responsible bidder for ITB or award the highest ranked supplier for an RFP*.

Justification/Explanation: Enter a brief justification or explanation for the requested action. Use this box to add any additional information such as additional account strings, or other information essential for contract execution.

Legal Contract Number: Provide the existing City contract number if applicable. This will be the same number as your POA number.

Contract Date: Select the effective date for the contract using the calendar option in the form. Leave blank for contracts to become effective on the execution date.

Change Order/AMD #: Provide the applicable Change Order or Amendment number represented by this request.

Date: Enter the date of PAF submission.

Effective Date: Enter the effective date of requested authority and/or action.

Solicitation: Select the competitive procurement method used (1Cloud generated prefix), enter the 1Cloud generated numbering sequence, and 1Cloud generated fiscal year of solicitation

Basis of Award: Select from Lowest Price Technical Acceptable (LPTA), Highest Price Technical Acceptable (HPTA),

Procurement Contract #: This is your PO number. Select Type, Enter Number

PO/Release Number: Enter PO Release Number

Awarded Supplier: Enter Awarded Supplier Name

Federally Funded: Select yes or no from dropdown if Federal Funds will be used.

Responses Received: This is the number of responses received.

No Bids Received: The number of responses received that indicated supplier would not bid.

Executed By: Select whether executed by OGC or JPAC / Chief of Procurement

PoP Base: Select the Period of Performance for the initial period.

Options: Period for each renewal period i.e. one (1) two (2) year.

Docusign Envelope ID: 89F51965-5845-41EE-92A2-D6C7ACC47E7E

Extensions: How many extensions have we preformed after the initial base period and option periods have been completed?

JSEB Goal: Select the percentage established by JSEB.

JESB Other: Select Encouragement or Set Aside Option

Bonds Waived Pursuant to: Select authority allowing bonds to be waived.

Funding Source: Fund/Center/Account/Project/Activity, all fields are required even if zeros.

New NTE/GMP: Enter the new total not to exceed the amount. Note, this should match the contract maximum indebtedness, if applicable**.**

Contingent Amount: If your agency requests an allowance for unforeseen additional expenses, then specify the amount of your requested increase and new NTE that represents the contingency allowance. This is over and above any quote.

DMP/ODPO Amount: Enter the total Direct Materials Purchase/Owner Direct Purchase Order amount for project.

Attachments: Name any attachments included as supplemental information to the PAF.

Using Agency/BU: This should be the requesting agency/requirement owner.

Concurrence: Electronic Signature

Title: Enter the title of person electronically signing form.

**Any fields where there is no data available, or no entry is required, either leave it blank or enter N/A. Any fields where there is known data, include for informational purposes. Any changes to an original award should contain the data that is being changed and any other relevant data required for JPAC review and approval.*

Docusign Envelope ID: 89F51965-5845-41EE-92A2-D6C7ACC47E7E

SUBJECT: Purchasing of an International MV607 w/ Grapple Loader

BID #: SC-0419-22 **OPEN DATE: 8/17/2022**

GENERAL GOVERNMENT AWARDS COMMITTEE

KIND AND BASIS OF CONTRACT: Service Contract - Date of award through September 30, 2023 with two (2) one (1) year renewal options

AGENCY: Fleet Management

BASIS OF AWARD: ALL OR NONE TO THE LOWEST RESPONSIVE, RESPONSIBLE BIDDER(S)

NUMBER OF BIDS INVITED: (11) **NUMBER RECEIVED:** (2) **OTHER:** (0)

SUMMARY OF BIDS AND RECOMMENDED ACTIONS:
Recommend approval to utilize the first renewal option with Cumberland International Trucks of Florida, LLC. Period of service is October 1, 2023 through September 30, 2024, with one (1), one (1) year renewal option remaining. Revised estimated annual expenditure amount is $183,390.00. Total expenditure not to exceed $522,770.00.

Funding Source: 51102.114001.564010.000000.00000499.00000.000000 – To be encumbered by purchase order

Attachments: Recommendation Memo, Vendor Letter, Previous Awards

ANALYST: _____ **RESPECTFULLY SUBMITTED** _____
Corey Sidlo
DUSTIN FREEMAN, CHIEF
PROCUREMENT DIVISION

CONCURRENCE BY: Crisencio Tongol, Chief, Fleet Management Division

(ALL AWARD ACTIONS SUBJECT TO LAWFULLY APPROPRIATED FUNDS)
ACTION OF GGAC COMMITTEE ON RECOMMENDATIONS ABOVE

MEMBERS APPROVING 3 MEMBERS DISAPPROVING 0 DATE: 9/7/2023

OTHER: _____

ACTION OF AWARDING AUTHORITY DATE 9/7/2023

APPROVED ✓ DISAPPROVED _____

OTHER _____

SIGNATURE OF AUTHENTICATION Karen Bowling

Karen Bowling
Chief Administrative Officer
For: Mayor Donna Deegan
Under Authority Of:
Executive Order No: 2023-02

Docusign Envelope ID: 89F51965-5845-41EE-92A2-D6C7ACC47E7E

FINANCE AND ADMINSTRATION DEPARTMENT

FLEET MANAGEMENT DIVISION

Jacksonville

Where Florida Begins.

Date: August 22, 2023

To: Dustin Freeman, Chief of Procurement Division

Thru: Cris Tongol, Chief of Fleet Management

From: David Hylazewski, Equipment Control Administrator DH

Re: Recommendation to utilize the First (1st) Renewal option for SC-0419-22 Purchase of international MV607 w/Grapple Loader

Fleet Management request approval to utilize the First (1st) renewal option with Cumberland International Trucks of Florida, LLC in the amount of $183,390.00. This will be a 2025 Model with a $13,700.00 increase. Period of Service is October 1, 2023 through September 30, 2024, with one remaining renewal option. Total estimated annual revenue amount is $183,390.00. Total revised estimated expenditure not to exceed $522,770.00.

Funding Source: 51102.114001.564010.000000.00000499.00000.0000000

2581 Commonwealth Ave. Jacksonville, FL 32254 Phone: 904.255-7499 Fax: 904.381.4607 www.coj.net

Docusign Envelope ID: 89F51965-5845-41EE-92A2-D6C7ACC47E7E

2017 AND 2018 DEALER OF THE YEAR

Cumberland

TRUCK / IDEALEASE / BUS / FIRE / SPOTTER

CUMBERLAND-COMPANIES.COM

August 16, 2023

City of Jacksonville
Fleet Management Division
Jacksonville, Fl 32254

To whom it may concern,

With regards to SC-0419-22 award and 1st renewal option, purchase of MV607 w/grapple loader, Cumberland International accepts and wishes to exercise the option to renew with the attached escalation cost associated with said purchase.

This will be a 2025 International MV w/grapple loader as previously purchased, per the attached specifications.

Pricing for this unit will be $183,390.00, terms net 30 and delivered to Jacksonville Fleet Management, Commonwealth Ave, Jacksonville Florida. Current anticipated delivery is late Q3 or early Q4 of 2024.

The escalation in price is represented by a 5% MY'25 price increase from Navistar on the chassis due to model year (3%), and price book component increases (2%), including the newest EPA24 engine requirements. Additionally, I have included a copy of correspondence from Petersen, manufacturer of the loader of how the current supply chain and logistic challenges have impacted their cost structure and price for the grapple loader.

Please advise acceptance of this renewal option and we will place the applicable orders for chassis and body accordingly.

Respectfully submitted,

Michael O'Brien
Fleet Sales
Cumberland International
904-219-9766

CAPACITY

IDEALEASE

Docusign Envelope ID: 89F51965-5845-41EE-92A2-D6C7ACC47E7E

INTERNATIONAL®

August 16, 2023

Prepared For:
CITY OF JACKSONVILLE
David Hylazewski
117 W Duval St. Ste. 375
Jacksonville, FL 32202-5725
(904)255 - 7470
Reference ID: N/A

Presented By:
Cumberland International Trucks, Inc.
Michael O'Brien
1881 Pickettville Road
Jacksonville FL 32220 -
(904)783-9822

Model Profile
2025 MV607 SBA (MV607)

AXLE CONFIG:	4X2
MISSION:	Requested GVWR: 33000. Calc. GVWR: 33000. Calc. GCWR: 43000
DIMENSION:	Wheelbase: 254.00, CA: 186.90, Axle to Frame: 81.00
ENGINE, DIESEL:	{Cummins B6.7 200} EPA 2024, 200HP @ 2400 RPM, 600 lb-ft Torque @ 1600 RPM, 2600 RPM Governed Speed, 200 Peak HP (Max)
TRANSMISSION, AUTOMATIC:	{Allison 3500 RDS} 6th Generation Controls, Wide Ratio, 5-Speed with Overdrive, with PTO Provision, Less Retarder, Includes Oil Level Sensor, with 80,000-lb GVW and GCW Max, On/Off Highway
CLUTCH:	Omit Item (Clutch & Control)
AXLE, FRONT NON-DRIVING:	{Hendrickson Steertek NXT} Fabricated Type, 12,000-lb Capacity
AXLE, REAR, SINGLE:	{Dana Spicer S23-172} Single Reduction, 23,000-lb Capacity, R Wheel Ends Gear Ratio: 4.30
CAB:	Conventional, Day Cab
TIRE, FRONT:	(2) 11R22.5 Load Range H HSR 3 (CONTINENTAL), 494 rev/mile, 75 MPH, All-Position
TIRE, REAR:	(4) 11R22.5 Load Range H HSR 3 (CONTINENTAL), 494 rev/mile, 75 MPH, All-Position
SUSPENSION, REAR, SINGLE:	23,500-lb Capacity, Vari-Rate Springs, with 4500-lb Capacity Auxiliary Rubber Springs
PAINT:	Cab schematic 100WP Location 1: 9219, Winter White (Std) Chassis schematic N/A

Proposal: 9805-01

Docusign Envelope ID: 89F51965-5845-41EE-92A2-D6C7ACC47E7E

INTERNATIONAL®

Vehicle Specifications
2025 MV607 SBA (MV607)

August 16, 2023

Description	F/R Wt (lbs)	Tot Wt (lbs)
Base Chassis, Model MV607 SBA with 254.00 Wheelbase, 186.90 CA, and 81.00 Axle to Frame.	5354/2774	8128
AXLE CONFIGURATION		
AXLE CONFIGURATION {Navistar} 4x2	0/0	0
Notes : Pricing may change if axle configuration is changed.		
ENGINE		
ENGINE, DIESEL {Cummins B6.7 200} EPA 2024, 200HP @ 2400 RPM, 600 lb-ft Torque @ 1600 RPM, 2600 RPM Governed Speed, 200 Peak HP (Max)	0/0	0
EMISSION, CALENDAR YEAR {Cummins B6.7} EPA, OBD and GHG Certified for Calendar Year 2024	0/0	0
CARB EMISSION WARR COMPLIANCE Does Not Comply with CARB Emission Warranty	0/0	0
CARB IDLE COMPLIANCE Does Not Comply with California Clean Air Idle Regulations	0/0	0
EPA IDLE COMPLIANCE Low NOx Idle Engine, Complies with EPA Clean Air Regulations; Includes "Certified Clean Idle" Decal on Hood	0/0	0
RADIATOR Aluminum, 2-Row, Down Flow, Front to Back System, 640 Sqin Louvered, with 383 Sqin Charge Air Cooler, Includes In-Tank Oil Cooler	0/0	0
FAN DRIVE {Horton Drivemaster} Two-Speed Type, Direct Drive, with Residual Torque Device for Disengaged Fan Speed	11/-1	10
Includes : FAN Nylon		
AIR CLEANER Single Element, Fire Retardant Media	0/0	0
ANTI-FREEZE Red, Extended Life Coolant; To -40 Degrees F/ -40 Degrees C, Freeze Protection	0/0	0
BLOCK HEATER, ENGINE {Phillips} 120V/750W, for Cummins ISB/B6.7 Engines	0/0	0
Includes : BLOCK HEATER SOCKET Receptacle Type; Mounted below Drivers Door		
ENGINE CONTROL, REMOTE MOUNTED No Provision for Remote Mounted Engine Control	0/0	0
HOSE CLAMPS, RADIATOR HOSES {R.G. Ray Mini Flex Seal} Coil Spring/"T"-Bolt Constant Torque Type, for Radiator Hoses over 1" I.D.	0/0	0
OIL PAN 15 Quart Capacity, For Cummins ISB/B6.7 Engines	0/0	0
THROTTLE, HAND CONTROL Engine Speed Control for PTO; Electronic, Stationary Pre-Set, Two Speed Settings; Mounted on Steering Wheel	2/0	2
TRANSMISSION		
TRANSMISSION, AUTOMATIC {Allison 3500 RDS} 6th Generation Controls, Wide Ratio, 5-Speed with Overdrive, with PTO Provision, Less Retarder, Includes Oil Level Sensor, with 80,000-lb GVW and GCW Max, On/Off Highway	239/44	283
ALLISON SPARE INPUT/OUTPUT for Rugged Duty Series (RDS) and Regional Haul Series (RHS), General Purpose Trucks, Package Number 223, Modified for Single Input Auto Neutral	0/0	0
AUTOMATIC NEUTRAL Allison Transmission Shifts to Neutral When Parking Brake is Engaged and Remains in Neutral When Parking Brake is Disengaged, with On/Off Switch	0/0	0

Docusign Envelope ID: 89F51965-5845-41EE-92A2-D6C7ACC47E7E

INTERNATIONAL®

Vehicle Specifications
2025 MV607 SBA (MV607)

August 16, 2023

Description	F/R Wt (lbs)	Tot Wt (lbs)
NEUTRAL AT STOP Allison Transmission Shifts to Neutral When Service Brake Is Depressed and Vehicle is at Stop; Remains in Neutral Until Service Brake is Released	0/0	0
PTO CONTROL, DASH MOUNTED For Customer Provided PTO; Includes Switch, Electric/Air Solenoid, Piping and Wiring	3/0	3
PTO LOCATION Customer Intends to Install PTO at Left Side of Transmission	0/0	0
SHIFT CONTROL PARAMETERS (Allison) 3000 or 4000 Series Transmissions, Performance Programming	0/0	0
TRANSMISSION OIL Synthetic; 29 thru 42 Pints	0/0	0
TRANSMISSION SHIFT CONTROL Column Mounted Stalk Shifter, Not for Use with Allison 1000 & 2000 Series Transmission	1/0	1
CLUTCH		
CLUTCH Omit Item (Clutch & Control)	0/0	0
REAR AXLES, SUSPENSIONS		
AXLE, REAR, SINGLE (Dana Spicer S23-172) Single Reduction, 23,000-lb Capacity, R Wheel Ends . Gear Ratio: 4.30	0/311	311
SUSPENSION, REAR, SINGLE 23,500-lb Capacity, Vari-Rate Springs, with 4500-lb Capacity Auxiliary Rubber Springs	0/66	66
AXLE, REAR, LUBE (EmGard FE-75W-90) Synthetic Oil; 30 thru 39.99 Pints	0/0	0
SHOCK ABSORBERS, REAR (2)	0/45	45
FRONT AXLES		
AXLE, FRONT NON-DRIVING (Hendrickson Steertek NXT) Fabricated Type, 12,000-lb Capacity	39/0	39
FRONT SUSPENSIONS		
SUSPENSION, FRONT, SPRING Parabolic Taper Leaf, Shackle Type, 12,000-lb Capacity, with Shock Absorbers	36/0	36
Includes : SPRING PINS Rubber Bushings, Maintenance-Free		
CABS, COWLS, BODIES		
CAB Conventional, Day Cab	0/0	0
Includes : CLEARANCE/MARKER LIGHTS (5) Flush Mounted		
ACCESS, CAB Steel, Driver & Passenger Sides, Two Steps per Door, for use with Day Cab and Extended Cab	0/0	0
AIR CONDITIONER with Integral Heater and Defroster	56/0	56
CAB INTERIOR TRIM Classic, for Day Cab	0/0	0
Includes : CONSOLE, OVERHEAD Molded Plastic with Dual Storage Pockets, Retainer Nets and CB Radio Pocket; Located Above Driver and Passenger : DOME LIGHT, CAB Door Activated and Push On-Off at Light Lens, Timed Theater Dimming, Integral to Overhead Console, Center Mounted		

Docusign Envelope ID: 89F51965-5845-41EE-92A2-D6C7ACC47E7E

Description	F/R Wt (lbs)	Tot Wt (lbs)
: SUN VISOR (2) Padded Vinyl; 2 Moveable (Front-to-Side) Primary Visors, Driver Side with Toll Ticket Strap	42/0	42
CAB REAR SUSPENSION Air Suspension, for Mid Cab Height	1/0	1
FRESH AIR FILTER Attached to Air Intake Cover on Cowl Tray in Front of Windshield Under Hood	0/0	0
GAUGE CLUSTER Base Level; English with English Electronic Speedometer Includes : GAUGE CLUSTER DISPLAY: Base Level (3" Monochromatic Display), Premium Level (5" LCD Color Display); Odometer, Voltmeter, Diagnostic Messages, Gear Indicator, Trip Odometer, Total Engine Hours, Trip Hours, MPG, Distance to Empty/Refill for : GAUGE CLUSTER Speedometer, Tachometer, Engine Coolant Temp, Fuel Gauge, DEF Gauge, Oil Pressure Gauge, Primary and Secondary Air Pressure or Auxiliary Air Pressure (if Air Equipped) : WARNING SYSTEM Low Fuel, Low DEF, Low Oil Pressure, High Engine Coolant Temp, Low Battery Voltage (Visual and Audible), Low Air Pressure, Primary and Secondary (if Air Equipped)		
GAUGE, AIR CLEANER RESTRICTION (Filter-Minder) Mounted in Instrument Panel	2/0	2
GAUGE, OIL TEMP, AUTO TRANS for Allison Transmission	1/0	1
GRAB HANDLE, EXTERIOR (2) Black, Aluminum, for Cab Entry Mounted Left and Right Side at B-Pillar	4/0	4
INSTRUMENT PANEL Flat Panel	0/0	0
IP CLUSTER DISPLAY On Board Diagnostics Display of Fault Codes in Gauge Cluster	0/0	0
MIRRORS (2) Aero Pedestal, Power Adjust, Heated, Black Heads and Arms, 6.5" x 14" Flat Glass, Includes 6.5" x 6" Convex Mirrors, for 102" Load Width Notes : Mirror Dimensions are Rounded to the Nearest 0.5"	0/0	0
SEAT, DRIVER (National 2000) Air Suspension, High Back with Integral Headrest, Vinyl, Isolator, 1 Chamber Lumbar, with 2 Position Front Cushion Adjust, -3 to +14 Degree Angle Back Adjust	-15/-3	-18
SEAT, TWO-MAN PASSENGER (National) Fixed Back, Integrated Headrest in Both Occupant Positions, Vinyl, with Under Seat Storage Compartment	49/22	71
WINDOW, MANUAL (2) and Manual Door Locks, Left and Right Doors	0/0	0
FRAMES		
FRAME RAILS Heat Treated Alloy Steel (120,000 PSI Yield); 10.375" x 3.705" x 0.438" (263.5mm x 94.1mm x 11.1mm); 456.0" (11582mm) Maximum OAL	359/646	1005
BUMPER, FRONT Contoured, Steel, Painted Gloss Black	0/0	0
GVWR LIMITATION FOR FRAME Frame Rails Limited to 33,000 lb Maximum GVWR	0/0	0
TOW HOOK, FRONT (2) Frame Mounted	8/0	8
LICENSE PLATE HOLDER Includes Upper & Lower Mounting Plate Hardware, Mounted in Existing Holes in Front Bumper	3/0	3
WHEELBASE RANGE 199" (505cm) Through and Including 254" (645cm)	251/-251	0
BRAKES		
BRAKE SYSTEM, AIR Dual System for Straight Truck Applications Includes : BRAKE LINES Color and Size Coded Nylon : DRAIN VALVE Twist-Type	-37/-13	-50

Docusign Envelope ID: 89F51965-5845-41EE-92A2-D6C7ACC47E7E

Description	F/R Wt (lbs)	Tot Wt (lbs)
: GAUGE, AIR PRESSURE (2) Air 1 and Air 2 Gauges; Located in Instrument Cluster : PARKING BRAKE CONTROL Yellow Knob, Located on Instrument Panel : PARKING BRAKE VALVE For Truck : QUICK RELEASE VALVE On Rear Axle for Spring Brake Release: 1 for 4x2, 2 for 6x4 : SPRING BRAKE MODULATOR VALVE R-7 for 4x2, SR-7 with relay valve for 6x4/8x6		
AIR BRAKE ABS {Bendix AntiLock Brake System} 4-Channel (4 Sensor/4 Modulator) Full Vehicle Wheel Control System	9/21	30
BRAKE, PARKING Manual Push-Pull Pneumatic Parking Brake	1/0	1
BRAKES, FRONT {Meritor 15X4 Q-PLUS CAST} Air S-Cam Type, Cast Spider, Fabricated Shoe, Double Anchor Pin, Size 15" X 4", 13,200-lb Capacity	77/0	77
BRAKE CHAMBERS, FRONT AXLE {Bendix} 20 Sqin	16/0	16
SLACK ADJUSTERS, FRONT {Gunite} Automatic	14/0	14
BRAKES, REAR {Meritor 16.5X7 Q-PLUS CAST} Air S-Cam Type, Cast Spider, Fabricated Shoe, Double Anchor Pin, Size 16.5" X 7", 23,000-lb Capacity per Axle	0/195	195
BRAKE CHAMBERS, REAR AXLE {Bendix EverSure} 30/30 Sqin Spring Brake	0/39	39
SLACK ADJUSTERS, REAR {Gunite} Automatic	0/14	14
AIR COMPRESSOR {Cummins} 18.7 CFM	37/1	38
AIR DRYER {Bendix AD-9SI} with Heater, Includes Safety Valve	18/-1	17
AIR DRYER LOCATION Mounted Inside Engine Compartment, Right Side	0/0	0
AIR TANK LOCATION (2) Mounted Under Battery Box, Outside Right Rail, Under Cab	42/9	51
DRAIN VALVE {Berg} with Pull Chain, for Air Tank	0/0	0
STEERING		
STEERING GEAR {Sheppard M100} Power	25/-3	22
STEERING COLUMN Tilting	15/1	16
STEERING WHEEL 4-Spoke; 18" Dia., Black	0/0	0
DRIVELINES		
DRIVELINE SYSTEM {Dana Spicer} 1710, for 4x2/6x2	4/24	28
EXHAUST SYSTEMS		
EXHAUST SYSTEM Horizontal Aftertreatment System, Frame Mounted Under Right Rail Back of Cab, Includes Single Short Horizontal Tail Pipe	0/0	0
ENGINE EXHAUST BRAKE for Cummins ISB/B6.7/ISL/L9 Engine with Variable Vane Turbo Charger	0/0	0
ELECTRICAL SYSTEMS		
ELECTRICAL SYSTEM 12-Volt, Standard Equipment	0/0	0

Includes
: DATA LINK CONNECTOR For Vehicle Programming and Diagnostics In Cab
: HAZARD SWITCH Push On/Push Off, Located on Instrument Panel to Right of Steering Wheel
: HEADLIGHT DIMMER SWITCH Integral with Turn Signal Lever
: PARKING LIGHT Integral with Front Turn Signal and Rear Tail Light

Docusign Envelope ID: 89F51965-5845-41EE-92A2-D6C7ACC47E7E

INTERNATIONAL®

Vehicle Specifications
2025 MV607 SBA (MV607)

August 16, 2023

Description	F/R Wt (lbs)	Tot Wt (lbs)
: STARTER SWITCH Electric, Key Operated : STOP, TURN, TAIL & B/U LIGHTS Dual, Rear, Combination with Reflector : TURN SIGNAL SWITCH Self-Cancelling for Trucks, Manual Cancelling for Tractors, with Lane Change Feature : TURN SIGNALS, FRONT Includes Reflectors and Auxiliary Side Turn Signals, Solid State Flashers; Flush Mounted : WINDSHIELD WIPER SWITCH 2-Speed with Wash and Intermittent Feature (5 Pre-Set Delays), Integral with Turn Signal Lever : WINDSHIELD WIPERS Single Motor, Electric, Cowl Mounted : WIRING, CHASSIS Color Coded and Continuously Numbered		
ALTERNATOR {Leece-Neville AVI160P2013} Brush Type, 12 Volt, 160 Amp Capacity, Pad Mount, with Remote Sense	0/0	0
ANTENNA Shark Fin, Roof Mounted	1/0	1
BACK-UP ALARM Electric, 102 dBA	0/3	3
BATTERY BOX Steel, with Plastic Cover, 25" Wide, 2-3 Battery Capacity, Mounted Right Side Under Cab	0/0	0
BATTERY SYSTEM {Fleetrite} Maintenance-Free, (2) 12-Volt 1900CCA Total, Top Threaded Stud	10/4	14
BODY BUILDER WIRING Rear of Frame; Includes Sealed Connectors for Tail/Amber Turn/Marker/ Backup/ Accessory Power/Ground and Sealed Connector for Stop/Turn	0/3	3
CIRCUIT BREAKERS Manual-Reset (Main Panel) SAE Type III with Trip Indicators, Replaces All Fuses	0/0	0
HEADLIGHTS Halogen, with Daytime Running Lights	0/0	0
HEADLIGHTS ON W/WIPERS Headlights Will Automatically Turn on if Windshield Wipers are turned on	0/0	0
HORN, AIR Single Trumpet, Black, with Lanyard Pull Cord	3/0	3
HORN, ELECTRIC (2) Trumpet Style	0/0	0
INDICATOR, LOW COOLANT LEVEL with Audible Alarm	0/0	0
POWER SOURCE, ADDITIONAL Auxiliary Power Outlet (APO) with USB-A Port and USB-C Port, Located in the Instrument Panel	0/0	0
RADIO AM/FM/WB/Clock/Bluetooth/USB Input/Auxiliary Input	3/0	3
SPEAKERS (2) 6.5" Dual Cone Mounted in Doors	5/0	5
STARTING MOTOR {Mitsubishi Electric Automotive America 90P47} 12-Volt, with Soft-Start	0/0	0
TEST EXTERIOR LIGHTS Pre-Trip Inspection will Cycle all Exterior Lamps Except Back-up Lights	0/0	0
FRONT END		
FRONT END Tilting, Fiberglass, with Three Piece Construction, Dual Air Intakes	0/0	0
FENDER EXTENSIONS Painted	0/0	0
GRILLE Molded in Black, with Chrome Surround	0/0	0
LOGOS EXTERIOR Model Badges	0/0	0
LOGOS EXTERIOR, ENGINE Badges	0/0	0
SPEEDOMETER, TOOLS, MISC		
COMMUNICATIONS MODULE Telematics Device with Over the Air Programming; Includes Five Year Data Plan and International 360	0/0	0

Docusign Envelope ID: 89F51965-5845-41EE-92A2-D6C7ACC47E7E

Description	F/R Wt (lbs)	Tot Wt (lbs)
FIRE EXTINGUISHER 5 lb Class A B C	9/1	10
FIRE EXTINGUISHER BRACKET Mounted Left Side Driver Seat	1/0	1
MUD FLAPS, FRONT WHEELS (2) Rubber, Mounted on Fender Extension	12/0	12
PAINT SCHEMATIC, PT-1 Single Color, Design 100	0/0	0
Includes : PAINT SCHEMATIC ID LETTERS "WP"		
PAINT TYPE Base Coat/Clear Coat, 1-2 Tone	0/0	0
PROMOTIONAL PACKAGE Government Silver Package	0/0	0
SAFETY TRIANGLES	6/0	6
FUEL TANKS		
FUEL TANK Top Draw, Non-Polished Aluminum, D-Style, 19" Tank Depth, 50 US Gal (189L), Mounted Left Side, Under Cab	23/6	29
DEF TANK 7 US Gal (26L) Capacity, Frame Mounted Outside Left Rail, Under Cab	0/0	0
FUEL/WATER SEPARATOR {Racor 400 Series,} 12 VDC Electric Heater, Includes Pre-Heater, with Primer Pump, Includes Water-In-Fuel Sensor	-3/0	-3
LOCATION FUEL/WATER SEPARATOR Mounted Under Hood, Left Side, Above Front Axle	0/0	0
WHEELS, TIRES - FRONT		
WHEELS, FRONT {Accuride 29001} DISC; 22.5x7.50 Rims, Powder Coat Steel, 5-Hand Hole, 10-Stud, 285.75mm BC, Hub-Piloted, Flanged Nut, with Steel Hubs	0/0	0
(2) TIRE, FRONT 11R22.5 Load Range H HSR 3 (CONTINENTAL), 494 rev/mile, 75 MPH, All-Position	78/0	78
WHEELS, TIRES - REAR		
WHEELS, REAR {Accuride 29001} DUAL DISC; 22.5x7.50 Rims, Powder Coat Steel, 5-Hand Hole, 10-Stud, 285.75mm BC, Hub-Piloted, Flanged Nut, with Steel Hubs	0/0	0
(4) TIRE, REAR 11R22.5 Load Range H HSR 3 (CONTINENTAL), 494 rev/mile, 75 MPH, All-Position	0/156	156
BODY INTEGRATION		
BDY INTG, REMOTE POWER MODULE Mounted Under Cab or On Battery Box, Up to 6 Outputs & 6 Inputs, Max 20 amp per Channel, Max 80 amp Total; Includes 1 Switch Pack with Latched Switches	0/0	0
BDY INTG, INDICATOR LIGHTS (2) 1 for Boom Out of Stow, 1 for Outriggers Deployed, Includes Audible Alarm and Interlock to Parking Brake, Programmable Mode for Various Switch Actions (requires 2 Remote Power Module inputs)	0/0	0

Services Section:

WARRANTY		
WARRANTY Standard for MV Series, Effective with Vehicles Built July 1, 2017 or Later, CTS-2020A	0/0	0
SERVICES, TOWING {Navistar} Service Call to 36-Month/Unlimited Mileage to the Nearest Navistar Dealer for Navistar Warrantable Failure as Contract Defined; Includes Engine Failure if Supplier Declines Tow Coverage & ESC Supplied thru Navistar; $275 (USA) Maximum Benefit per Incident	0/0	0

Docusign Envelope ID: 89F51965-5845-41EE-92A2-D6C7ACC47E7E

INTERNATIONAL®

Vehicle Specifications
2025 MV607 SBA (MV607)

August 16, 2023

Description	F/R Wt (lbs)	Tot Wt (lbs)
SRV CONTRACT, EXT CMS ENG/AFTR {Cummins} To 60-Month/150,000 Miles (240,000 km), Extended Cummins B6.7 Engine Coverage, Protection Plan 1 and Aftertreatment, (Truck Application Only)	0/0	0
Total Component Weight:	**6815/4113** (lbs)	**10928** (lbs)
Petersen Model TL3 loader per specifications	0/0	0
Total Body Allied:	**0/0** (lbs)	**0** (lbs)

The weight calculations included in this proposal are an estimate of future vehicle weight. The actual weight as manufactured may be different from the estimated weight. Navistar, Inc. shall not be liable for any consequences resulting from any differences between the estimated weight of a vehicle and the actual weight.

Docusign Envelope ID: 89F51965-5845-41EE-92A2-D6C7ACC47E7E

INTERNATIONAL®

Financial Summary
2025 MV607 SBA (MV607)

August 16, 2023

(US DOLLAR)

Description		Price
Net Sales Price:		$183,390.00
Memo Item(s):		
Total Federal Excise Tax	$0.00	
Note: Memo item(s) shown here are included in the above Net Sales Price.		

Please feel free to contact me regarding these specifications should your interests or needs change. I am confident you will be pleased with the quality and service of an International vehicle.

Approved by Seller:

Fleet Sales 8/16/23

Official Title and Date

Authorized Signature

Accepted by Purchaser:

Firm or Business Name

Authorized Signature and Date

This proposal is not binding upon the seller without Seller's Authorized Signature

Official Title and Date

The TOPS FET calculation is an estimate for reference purposes only. The seller or retailer is responsible for calculating and reporting/paying appropriate FET to the IRS.

The limited warranties applicable to the vehicles described herein are Navistar, Inc.'s standard printed warranties which are incorporated herein by reference and to which you have been provided a copy and hereby agree to their terms and conditions.

Docusign Envelope ID: 89F51965-5845-41EE-92A2-D6C7ACC47E7E

Petersen Industries, Inc.
4000 SR 60 W
Lake Wales, FL 33859
Phone: (800) 930-5623
email: parts-service@petersenind.com

Quote

LIGHTNING LOADER

Quote No	Quote Date	Page
20231491	8/8/2023	1

Bill To:
MAUDLIN INTERNATIONAL
DBA CUMBERLAND
2110 SOUTH DIVISION AVE.
ORLANDO, FL 32805
US

Ship to:
MAUDLIN INTERNATIONAL
DBA CUMBERLAND
2110 SOUTH DIVISION
ORLANDO, FL 32805
US

END USER: Jacksonville, City of (FL)

Customer No	Slsman	Payment terms
1390	Bryce Otwell	Net 30

Loc	PPD/COL	Ship via	Ship Date
LW		Best Way	8/8/2023

Delivery Date: 60-90 Days ACA

Qty Ordered	UOM	Item No	Unit price	Disc	Extended price
1.00	EA	LOADER AS CONFIGURED BELOW Additional options to include: 24" Walk Thru			8.00
		Feature/Kit Components- LOADER			
1.00	EA	0.TL3 MODEL TL3 BASE LOADER	1.00		
1.00	EA	03.11SAI HEAVY DUTY SWING MOTOR	1.00		
1.00	EA	03.12 STD HT PED STANDARD HEIGHT PEDESTAL	1.00		
1.00	EA	10.16 HDHI HDHI OUTRIGGER STROBE	1.00		
1.00	EA	07.105860 STANDARD BUCKET 60"	1.00		
1.00	EA	10.04 BUWL BOOM-UP WARNING LIGHT/AUDIBLE ALARM	1.00		
1.00	EA	13.00 AO ADD'L OPTIONS AS DEFINED BELOW	1.00		
1.00	EA	12.36 HD HD CONTROL BOX THROTTLE ENGINE KILL & HORN	1.00		
1.00	EA	12.02 TP TANDEM PUMP IN LIEU OF SINGLE 18 GMP	1.00		
1.00	EA	12.08 RK TRIANGLE FLARE KIT	1.00		
1.00	EA	12.06 SLB FIRE EXTINGUISHER SLB	1.00		
1.00	EA	11.02 LBPIO LOADER SINGLE COLOR PI ORANGE	1.00		
1.00	EA	8.0 DUMP BODY AS CONFIGURED BELOW			8.00
		Feature/Kit Components- 8.0 DUMP BODY			
1.00	EA	8.29 2026-HDX MODEL HDX-2026 HARDOX BODY 1/8" SIDES, 3/16" FLOOR	1.00		
1.00	EA	8.36 PISWLCO PI SELF-WINDING LOAD COVERING DEVICE (ADD-ON)	1.00		
1.00	EA	8.72 OPRD SINGLE PIECE REAR DOOR (REPLACES STND BARN DOORS)	1.00		
1.00	EA	8.47 WL-BW WIRE LOOM FOR BODY WIRING	1.00		

Docusign Envelope ID: 89F51965-5845-41EE-92A2-D6C7ACC47E7E

Petersen Industries, Inc.
4000 SR 60 W
Lake Wales, FL 33859
Phone: (800) 930-5623
email: parts-service@petersenind.com

Quote

LIGHTNING LOADER

Quote No	Quote Date	Page
20231491	8/8/2023	2

Bill To
MAUDLIN INTERNATIONAL
DBA CUMBERLAND
2110 SOUTH DIVISION AVE.
ORLANDO, FL 32805
US

Ship to
MAUDLIN INTERNATIONAL
DBA CUMBERLAND
2110 SOUTH DIVISION
ORLANDO, FL 32805
US

END USER: Jacksonville, City of (FL)

Customer No	Slsman	Payment terms
1390	Bryce Otwell	Net 30

Loc	PPD/COL	Ship via	Ship Date
LW		Best Way	8/8/2023

Delivery Date: 60-90 Days ACA

Qty Ordered	UOM	Item No	Unit price	Disc	Extended price
1.00	EA	10.09 LED LED TYPE BODY LIGHTS, 15 EA.	1.00		
1.00	EA	10.10 LED FLASH AMBER LED FLASHERS IN REAR CORNER POST	1.00		
1.00	EA	8.77ANSI ANSI Z245 PACKAGE	1.00		
1.00	EA	11.02B BODY COLOR: BLACK	1.00		
1.00	EA	11.01 UTB UNDERCOAT TRASH BODY (BOTTOM)	1.00		

Michael O'Brien/904-219-9766

Signature

Date

SubTotal
Delivery
Tax
Total Quote

THE QUOTE TOTAL MAY NOT REFLECT MISCELLANEOUS CHARGES, FREIGHT OR SALES TAX

(C)2022 Petersen Industries

[redacted]

[redacted]

Docusign Envelope ID: 89F51965-5845-41EE-92A2-D6C7ACC47E7E

Letter#	:	G-814
Content Type	:	Sales Programs
Posted Date	:	06/06/2023
Effective Date	:	06/06/2023
Expiration Date	:	12/31/9999

APPLICABLE TO UNITED STATES DEALERS ONLY

June 2023 Price Page - All Truck Models

All U.S. Dealers

We are pleased to announce that a pricing update will be available on June 6, 2023, that will impact average vehicle prices for Model Year 2025.

This price update pertains only to EPA/48-state certified vehicles and warranties. Neither CARB compliant nor vehicles to be registered in California and Oregon can be priced at this time.

All pricing and sales codes related to CARB engine compliance will be available once CARB finalizes the 2024 regulations. Pricing will be communicated by means of a future revision to this letter.

The following table indicates average vehicle price adjustments, based on required standard chassis and option content pricing changes. It does not include Cummins CARB engine and ESC warranty pricing. The adjustment is the price increase from the October 14th, 2022 price pages.

International® Model	Model Year	Price Book % Increase[1] (RANGE)	Avg Model Year % Increase[2]	Total Avg MY25 Price Increase[4]
LT® RH™	MY25	0.3% - 4.0%	3.0%	3.3% - 7.0%
HX®	MY25	1.6% - 4.4%	3.0%	4.6% - 7.4%
HV™ MRD	MY25	1.6%	3.0%	4.6%
HV™ HDD	MY25	1.8%	3.0%	4.8%
MV™	MY25	1.7% - 2.0%	3.0%	4.7% - 5.0%
CV™[3]	MY24	6.0%	0%	6.0%
eMV™	MY25	0%	0%	0%

[1]Based on required standard changes, options price increases and GHG 2024 compliance charges for Cummins engines

[2]MY price increases include overall inflationary impact of parts, labor, standard warranty and transportation costs. This increase will be administered via SPA reduction.

[3]CV™ Series pricing: 2023 Surcharge and 2024 MY rolled into the base chassis

[4]The overall impact of these price changes in any particular instance will be dependent on the final vehicle specifications and any changes in standard equipment. Please review all standard and optional equipment availability and prices in the June 2023 Price Page before quoting your customers. Larger increases incur with

Docusign Envelope ID: 89F51965-5845-41EE-92A2-D6C7ACC47E7E

August 10, 2023

To Whom It May Concern:

Petersen Industries has recently completed its pricing audit for 2024 and has once again had to adjust its pricing upwards based on a number of cost increases we have either already incurred or been informed of occurring at the start of the new year. The highlights of these are listed below:

1) ***Steel*** Although certain steel markets have levelled off and even seen some price relief in recent months, this has not been the case for the materials specific to building loaders. The primary steel used is DOM Tubing. This particular tubing is used for the loader booms, pedestals, and outriggers. We have seen cost increases of over 300% on DOM tube alone. We have also received notice that for Q1 2024 they will be implementing a surcharge of $130-$200 per ton on all DOM tube received. For comparison sake, prior to the effects in 2021 from the COVID virus, we had never seen more than a 20% fluctuation in the cost of this material.

2) ***Purchased Components*** Because of the continuing supply chain constraints across all industries, most of our component suppliers have increased their pricing for 2024. This includes but is not limited to: hydraulic components (PTO's, pumps, valves, fittings, & hoses), electrical components, paint and solvents, fasteners, welding wire, welding gases, hydraulic fluids, and the list goes on. We are seeing increases from 5-15% on many of these items.

3) ***Inflation*** With another record year for inflation (Over 8%) we are experiencing cost increases across all aspects of business operations. This includes labor, insurance, benefits, and general maintenance and operating items.

No one predicted the after-effects of the worldwide COVID pandemic. The United States had average inflation of 1.6% the 10 previous years prior to 2021. Since then, inflation has been above 7 and closer to 8% as a national average. Because we are not immune to these conditions, we have had to adjust our product pricing accordingly to remain viable.

WWW.PETERSENIND.COM
4000 SR 60 West | Lake Wales, FL 33859-8234 | t 800.930.LOAD (5623) | p 863.676.1493 | f 863.676.6844

Docusign Envelope ID: 89F51965-5845-41EE-92A2-D6C7ACC47E7E

LIGHTNING LOADER
PETERSEN
INDUSTRIES

I understand the situation this puts the City of Jacksonville in and I appreciate your understanding. We remain committed to being the best equipment supplier we can be for the City.

Respectfully,

Casey Hardee
President/CEO

WWW.PETERSENIND.COM
4000 SR 60 West | Lake Wales, FL 33859-8234 | t 800.930.LOAD (5623) | p 863.676.1493 | F 863.676.6844

Docusign Envelope ID: 89F51965-5845-41EE-92A2-D6C7ACC47E7E

SUBJECT: Purchasing of an International MV607 w/ Grapple Loader

BID #: SC-0419-22 **OPEN DATE: 8/17/2022**

GENERAL GOVERNMENT AWARDS COMMITTEE

KIND AND BASIS OF CONTRACT: Service Contract - Date of award through September 30, 2023 with two (2) one (1) year renewal options

AGENCY: Fleet Management

BASIS OF AWARD: ALL OR NONE TO THE LOWEST RESPONSIVE, RESPONSIBLE BIDDER(S)

NUMBER OF BIDS INVITED: (11) **NUMBER RECEIVED: (2)** **OTHER: (0)**

SUMMARY OF BIDS AND RECOMMENDED ACTIONS:
Recommend approval to increase the award with Cumberland International Trucks of Florida, LLC in the amount of $169,690.00 to purchase a Claw Truck for FY23. Total revised estimated expenditure amount not-to-exceed $339,380.00.

Funding Source: 51103.114001.564010.000000.00000500.00000.000000 – To be encumbered by purchase order

Attachments: Recommendation Memo, Previous Award

ANALYST: Corey Sidlo **RESPECTFULLY SUBMITTED** DUSTIN FREEMAN, CHIEF PROCUREMENT DIVISION

CONCURRENCE BY: Crisencio Tongol, Chief, Fleet Management Division

(ALL AWARD ACTIONS SUBJECT TO LAWFULLY APPROPRIATED FUNDS)
ACTION OF GGAC COMMITTEE ON RECOMMENDATIONS ABOVE

MEMBERS APPROVING 3 MEMBERS DISAPPROVING 0 DATE: 12/1/2022

OTHER:

ACTION OF AWARDING AUTHORITY DATE 12/1/2022

APPROVED ✓ DISAPPROVED

OTHER

SIGNATURE OF AUTHENTICATION

:ian Hughes
:uief Administrative Officer
:: Mayor Lenny Curry
:nder Authority of:
xecutive Order No. 2019-02

Docusign Envelope ID: 89F51965-5845-41EE-92A2-D6C7ACC47E7E

SUBJECT: Purchasing of an International MV607 w/ Grapple Loader

BID #: SC-0419-22 **OPEN DATE: 8/17/2022**

GENERAL GOVERNMENT AWARDS COMMITTEE

KIND AND BASIS OF CONTRACT: Service Contract - Date of award through September 30, 2023 with two (2) one (1) year renewal options

AGENCY: Fleet Management

BASIS OF AWARD: ALL OR NONE TO THE LOWEST RESPONSIVE, RESPONSIBLE BIDDER(S)

NUMBER OF BIDS INVITED: (11) **NUMBER RECEIVED: (2)** **OTHER: (0)**

SUMMARY OF BIDS AND RECOMMENDED ACTIONS:
Recommend approval of award to Cumberland International Trucks of Florida, LLC as the lowest responsive, responsible bidder. Period of service is one year from date of award, with two (2) one (1) year renewal options. Estimated initial expenditure amount not-to-exceed $169,690.00.

Funding Source: 51103.114001.564010.000000.00000500.00000.000000 – To be encumbered by purchase order

Attachments: Recommendation Memo, Bid Tabulation, Terms & Conditions, Specifications

ANALYST: _____ Corey Sidle **RESPECTFULLY SUBMITTED** _____ GREGORY PEASE, CHIEF PROCUREMENT DIVISION

CONCURRENCE BY: Crisencio Tongol, Chief, Fleet Management Division

(ALL AWARD ACTIONS SUBJECT TO LAWFULLY APPROPRIATED FUNDS)
ACTION OF GGAC COMMITTEE ON RECOMMENDATIONS ABOVE

MEMBERS APPROVING 3 MEMBERS DISAPPROVING 0 DATE: 9/1/2022

_____ OTHER: _____

_____

_____

ACTION OF AWARDING AUTHORITY DATE 9/1/2022

APPROVED ✓ DISAPPROVED _____

OTHER _____

SIGNATURE OF AUTHENTICATION _____ Brian Hughes
Chief Administrative Officer
~~For: Mayor Lenny Curry~~
Under Authority of:
Executive Order No: 2019-02

Docusign Envelope ID: 89F51965-5845-41EE-92A2-D6C7ACC47E7E

Kurtz, Sheryl - AFFM

From: Mike O'Brien <mobrien@cltte.com>
Sent: Thursday, September 19, 2024 12:30 PM
To: Kurtz, Sheryl - AFFM
Subject: RE: SC-0419-22 2st Renewal option
Attachments: International Petersen Loader.pdf

EXTERNAL EMAIL: This email originated from a non-COJ email address. Do not click any links or open any attachments unless you trust the sender and know the content is safe.

Good afternoon Sheryl.

Please find our proposal attached for any incremental orders placed by the City beyond the 1 unit referenced below in fiscal year 2025.

These will be model year 26 units and the price is reflective of current CPI index's, model year increases, and Petersen upfit cost/expense increasing since the previously placed orders were completed.

We hope the City finds this acceptable and extends our contract for an additional year.

Thank you in advance, please do not hesitate to reach out if you need additional information or have any questions.

Michael O'Brien
Fleet Sales, Cumberland International Trucks

Mobile 904-219-9766 Website cumberland-companies.com

Email mobrien@cltte.com

Address 1881 Pickettville Rd Jacksonville, FL 32220

Read our email communication disclaimer here.

Docusign Envelope ID: 89F51965-5845-41EE-92A2-D6C7ACC47E7E

INTERNATIONAL®

September 19, 2024

Prepared For:
CITY OF JACKSONVILLE
David Hylazewski
117 W Duval St. Ste. 375
Jacksonville, FL 32202-5725
(904)255 - 7470
Reference ID: N/A

Presented By:
Cumberland International Trucks, Inc.
Michael O'Brien
1881 Pickettville Road
Jacksonville FL 32220 -
(904)783-9822

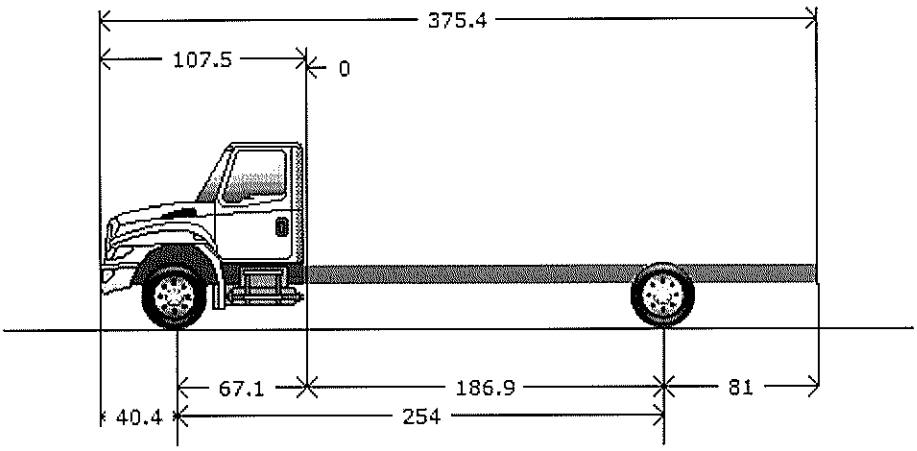

Model Profile
2026 MV607 SBA (MV607)

AXLE CONFIG:	4X2
MISSION:	Requested GVWR: 33000. Calc. GVWR: 33000. Calc. GCWR: 43000
DIMENSION:	Wheelbase: 254.00, CA: 186.90, Axle to Frame: 81.00
ENGINE, DIESEL:	{Cummins B6.7 200} EPA 2024, 200HP @ 2400 RPM, 600 lb-ft Torque @ 1600 RPM, 2600 RPM Governed Speed, 200 Peak HP (Max)
TRANSMISSION, AUTOMATIC:	{Allison 3500 RDS} 6th Generation Controls, Wide Ratio, 5-Speed with Overdrive, with PTO Provision, Less Retarder, Includes Oil Level Sensor, with 80,000-lb GVW and GCW Max, On/Off Highway
CLUTCH:	Omit Item (Clutch & Control)
AXLE, FRONT NON-DRIVING:	{Hendrickson Steertek NXT} Fabricated Type, 12,000-lb Capacity
AXLE, REAR, SINGLE:	{Dana Spicer S23-172} Single Reduction, 23,000-lb Capacity, R Wheel Ends Gear Ratio: 4.30
CAB:	Conventional, Day Cab
TIRE, FRONT:	(2) 11R22.5 Load Range H HSR 3 (CONTINENTAL), 494 rev/mile, 75 MPH, All-Position
TIRE, REAR:	(4) 11R22.5 Load Range H HSR 3 (CONTINENTAL), 494 rev/mile, 75 MPH, All-Position
SUSPENSION, REAR, SINGLE:	23,500-lb Capacity, Vari-Rate Springs, with 4500-lb Capacity Auxiliary Rubber Springs
PAINT:	Cab schematic 100WP Location 1: 9219, Winter White (Std) Chassis schematic N/A

Docusign Envelope ID: 89F51965-5845-41EE-92A2-D6C7ACC47E7E

2026 MV607 SBA (MV607)

Code	Description	F/R Wt (lbs)	Tot Wt (lbs)
MV60700	Base Chassis, Model MV607 SBA with 254.00 Wheelbase, 186.90 CA, and 81.00 Axle to Frame.	5381/3069	8450
AXLE CONFIGURATION			
1ANA	AXLE CONFIGURATION {Navistar} 4x2	0/0	0
	Notes : Pricing may change if axle configuration is changed.		
ENGINE			
12EXR	ENGINE, DIESEL {Cummins B6.7 200} EPA 2024, 200HP @ 2400 RPM, 600 lb-ft Torque @ 1600 RPM, 2600 RPM Governed Speed, 200 Peak HP (Max)	0/0	0
12VJR	EMISSION, CALENDAR YEAR {Cummins B6.7} EPA, OBD and GHG Certified for Calendar Year 2024	0/0	0
12XCS	CARB EMISSION WARR COMPLIANCE Does Not Comply with CARB Emission Warranty	0/0	0
12WZE	CARB IDLE COMPLIANCE Does Not Comply with California Clean Air Idle Regulations	0/0	0
12WVG	EPA IDLE COMPLIANCE Low NOx Idle Engine, Complies with EPA Clean Air Regulations; Includes "Certified Clean Idle" Decal on Hood	0/0	0
10UAV	VEHICLE REGISTRATION IDENTITY ID for Non CARB Omnibus/Non ACT Adopting State or Exempt Vehicle << Contains non-mitigated legacy engine & must be registered outside the States of CA/MA/OR unless exempt.You may be held liable under CA/MA/OR law for failure to properly register/otherwise failing to follow CA/MA/OR law>>	0/0	0
	Notes : CANNOT BE REGISTERED IN CA, OR, MA. For vehicles that will be registered in States other than CA, OR, MA.		
12XCC	RADIATOR Aluminum, 2-Row, Down Flow, Front to Back System, 640 Sqln Louvered, with 383 Sqln Charge Air Cooler, Includes In-Tank Oil Cooler	0/0	0
12THT	FAN DRIVE {Horton Drivemaster} Two-Speed Type, Direct Drive, with Residual Torque Device for Disengaged Fan Speed	42/-2	40
	Includes : FAN Nylon		
12VCE	AIR CLEANER Single Element, Fire Retardant Media	0/0	0
12703	ANTI-FREEZE Red, Extended Life Coolant; To -40 Degrees F/ -40 Degrees C, Freeze Protection	0/0	0
12WSY	BLOCK HEATER, ENGINE {Phillips} 120V/750W, for Cummins ISB/B6.7 Engines	0/0	0
	Includes : BLOCK HEATER SOCKET Receptacle Type; Mounted below Drivers Door		
12VYP	ENGINE CONTROL, REMOTE MOUNTED No Provision for Remote Mounted Engine Control	0/0	0
12WCG	HOSE CLAMPS, RADIATOR HOSES {R.G. Ray Mini Flex Seal} Coil Spring/"T"-Bolt Constant Torque Type, for Radiator Hoses over 1" I.D.	0/0	0
12WPV	OIL PAN 15 Quart Capacity, For Cummins ISB/B6.7 Engines	0/0	0

Docusign Envelope ID: 89F51965-5845-41EE-92A2-D6C7ACC47E7E

Code	Description	F/R Wt (lbs)	Tot Wt (lbs)
12VXU	THROTTLE, HAND CONTROL Engine Speed Control for PTO; Electronic, Stationary Pre-Set, Two Speed Settings; Mounted on Steering Wheel	2/0	2
TRANSMISSION			
13BDM	TRANSMISSION, AUTOMATIC {Allison 3500 RDS} 6th Generation Controls, Wide Ratio, 5-Speed with Overdrive, with PTO Provision, Less Retarder, Includes Oil Level Sensor, with 80,000-lb GVW and GCW Max, On/Off Highway	239/44	283
13WUS	ALLISON SPARE INPUT/OUTPUT for Rugged Duty Series (RDS) and Regional Haul Series (RHS), General Purpose Trucks, Package Number 223, Modified for Single Input Auto Neutral	0/0	0
13WUA	AUTOMATIC NEUTRAL Allison Transmission Shifts to Neutral When Parking Brake is Engaged and Remains in Neutral When Parking Brake is Disengaged, with On/Off Switch	0/0	0
13WVV	NEUTRAL AT STOP Allison Transmission Shifts to Neutral When Service Brake is Depressed and Vehicle is at Stop; Remains in Neutral Until Service Brake is Released	0/0	0
13XAA	PTO CONTROL, DASH MOUNTED For Customer Provided PTO; Includes Switch, Electric/Air Solenoid, Piping and Wiring	3/0	3
13XAL	PTO LOCATION Customer Intends to Install PTO at Left Side of Transmission	0/0	0
13WYU	SHIFT CONTROL PARAMETERS {Allison} 3000 or 4000 Series Transmissions, Performance Programming	0/0	0
13WLP	TRANSMISSION OIL Synthetic; 29 thru 42 Pints	0/0	0
13WET	TRANSMISSION SHIFT CONTROL Column Mounted Stalk Shifter, Not for Use with Allison 1000 & 2000 Series Transmission	1/0	1
CLUTCH			
11001	CLUTCH Omit Item (Clutch & Control)	0/0	0
REAR AXLES, SUSPENSIONS			
14AWL	AXLE, REAR, SINGLE {Dana Spicer S23-172} Single Reduction, 23,000-lb Capacity, R Wheel Ends . Gear Ratio: 4.30	0/311	311
14VAH	SUSPENSION, REAR, SINGLE 23,500-lb Capacity, Vari-Rate Springs, with 4500-lb Capacity Auxiliary Rubber Springs	0/66	66
14WMG	AXLE, REAR, LUBE {EmGard FE-75W-90} Synthetic Oil; 30 thru 39.99 Pints	0/0	0
14WAP	SHOCK ABSORBERS, REAR (2)	0/45	45
FRONT AXLES			
2AUC	AXLE, FRONT NON-DRIVING {Hendrickson Steertek NXT} Fabricated Type, 12,000-lb Capacity	39/0	39
FRONT SUSPENSIONS			
3ADC	SUSPENSION, FRONT, SPRING Parabolic Taper Leaf, Shackle Type, 12,000-lb Capacity, with Shock Absorbers	36/0	36
	Includes		

Docusign Envelope ID: 89F51965-5845-41EE-92A2-D6C7ACC47E7E

Code	Description	F/R Wt (lbs)	Tot Wt (lbs)
	: SPRING PINS Rubber Bushings, Maintenance-Free		
	Notes : In combinations where chassis component weights may cause a chassis lean, a spring is used in front left spring pack to offset this imbalance & provide a level chassis, within 3/8", with body installed.		
CABS, COWLS, BODIES			
16030	CAB Conventional, Day Cab	0/0	0
	Includes : CLEARANCE/MARKER LIGHTS (5) Flush Mounted		
16ZBT	ACCESS, CAB Steel, Driver & Passenger Sides, Two Steps per Door, for use with Day Cab and Extended Cab	0/0	0
16BAM	AIR CONDITIONER with Integral Heater and Defroster	56/0	56
16VKB	CAB INTERIOR TRIM Classic, for Day Cab	0/0	0
	Includes : CONSOLE, OVERHEAD Molded Plastic with Dual Storage Pockets, Retainer Nets and CB Radio Pocket; Located Above Driver and Passenger : DOME LIGHT, CAB Door Activated and Push On-Off at Light Lens, Timed Theater Dimming, Integral to Overhead Console, Center Mounted : SUN VISOR (2) Padded Vinyl; 2 Moveable (Front-to-Side) Primary Visors, Driver Side with Toll Ticket Strap		
16VLK	CAB REAR SUSPENSION Air Suspension, for Mid Cab Height	42/0	42
16WLS	FRESH AIR FILTER Attached to Air Intake Cover on Cowl Tray in Front of Windshield Under Hood	1/0	1
16GED	GAUGE CLUSTER Base Level; English with English Electronic Speedometer	0/0	0
	Includes : GAUGE CLUSTER DISPLAY: Base Level (3" Monochromatic Display), Premium Level (5" LCD Color Display); Odometer, Voltmeter, Diagnostic Messages, Gear Indicator, Trip Odometer, Total Engine Hours, Trip Hours, MPG, Distance to Empty/ Refill for : GAUGE CLUSTER Speedometer, Tachometer, Engine Coolant Temp, Fuel Gauge, DEF Gauge, Oil Pressure Gauge, Primary and Secondary Air Pressure or Auxiliary Air Pressure (if Air Equipped) : WARNING SYSTEM Low Fuel, Low DEF, Low Oil Pressure, High Engine Coolant Temp, Low Battery Voltage (Visual and Audible), Low Air Pressure, Primary and Secondary (if Air Equipped)		
16HHE	GAUGE, AIR CLEANER RESTRICTION {Filter-Minder} Mounted in Instrument Panel	2/0	2
16HGH	GAUGE, OIL TEMP, AUTO TRANS for Allison Transmission	1/0	1
16SED	GRAB HANDLE, EXTERIOR (2) Black, Aluminum, for Cab Entry Mounted Left and Right Side at B-Pillar	4/0	4
16XJN	INSTRUMENT PANEL Flat Panel	0/0	0
16HKT	IP CLUSTER DISPLAY On Board Diagnostics Display of Fault Codes in Gauge Cluster	0/0	0
16SNS	MIRRORS (2) Aero Pedestal, Power Adjust, Heated, Black Heads and Arms, 6.5" x 14" Flat Glass, Includes 6.5" x 6" Convex Mirrors, for 102" Load Width	0/0	0

Docusign Envelope ID: 89F51965-5845-41EE-92A2-D6C7ACC47E7E

Code	Description	F/R Wt (lbs)	Tot Wt (lbs)
	Notes : Mirror Dimensions are Rounded to the Nearest 0.5"		
16JNT	SEAT, DRIVER {National 2000} Air Suspension, High Back with Integral Headrest, Vinyl, Isolator, 1 Chamber Lumbar, with 2 Position Front Cushion Adjust, -3 to +14 Degree Angle Back Adjust	-15/-3	-18
16SMH	SEAT, TWO-MAN PASSENGER {National} Fixed Back, Integrated Headrest in Both Occupant Positions, Vinyl, with Under Seat Storage Compartment	49/22	71
16XCK	WINDOW, MANUAL (2) and Manual Door Locks, Left and Right Doors	0/0	0
FRAMES			
1CAH	FRAME RAILS Heat Treated Alloy Steel (120,000 PSI Yield); 10.375" x 3.705" x 0.438" (263.5mm x 94.1mm x 11.1mm); 456.0" (11582mm) Maximum OAL	382/681	1063
1LNG	BUMPER, FRONT Contoured, Steel, Painted Gloss Black	0/0	0
1CGM	GVWR LIMITATION FOR FRAME Frame Rails Limited to 33,000 lb Maximum GVWR	0/0	0
1570	TOW HOOK, FRONT (2) Frame Mounted	8/0	8
1LEG	LICENSE PLATE HOLDER Includes Upper & Lower Mounting Plate Hardware, Mounted in Existing Holes in Front Bumper	3/0	3
1WEJ	WHEELBASE RANGE 199" (505cm) Through and Including 254" (645cm)	251/-251	0
BRAKES			
4091	BRAKE SYSTEM, AIR Dual System for Straight Truck Applications	0/0	0
	Includes : BRAKE LINES Color and Size Coded Nylon : DRAIN VALVE Twist-Type : GAUGE, AIR PRESSURE (2) Air 1 and Air 2 Gauges; Located in Instrument Cluster : PARKING BRAKE CONTROL Yellow Knob, Located on Instrument Panel : PARKING BRAKE VALVE For Truck : QUICK RELEASE VALVE On Rear Axle for Spring Brake Release: 1 for 4x2, 2 for 6x4 : SPRING BRAKE MODULATOR VALVE R-7 for 4x2, SR-7 with relay valve for 6x4/8x6		
4AZA	AIR BRAKE ABS {Bendix AntiLock Brake System} 4-Channel (4 Sensor/4 Modulator) Full Vehicle Wheel Control System	0/0	0
4GBM	BRAKE, PARKING Manual Push-Pull Pneumatic Parking Brake	0/0	0
4XDC	BRAKES, FRONT {Meritor 15X4 Q-PLUS CAST} Air S-Cam Type, Cast Spider, Fabricated Shoe, Double Anchor Pin, Size 15" X 4", 13,200-lb Capacity	0/0	0
4EXP	BRAKE CHAMBERS, FRONT AXLE {Bendix} 20 Sqln	16/0	16
4LAG	SLACK ADJUSTERS, FRONT {Gunite} Automatic	14/0	14
4XDR	BRAKES, REAR {Meritor 16.5X7 Q-PLUS CAST} Air S-Cam Type, Cast Spider, Fabricated Shoe, Double Anchor Pin, Size 16.5" X 7", 23,000-lb Capacity per Axle	0/0	0
4EXU	BRAKE CHAMBERS, REAR AXLE {Bendix EverSure} 30/30 Sqln Spring Brake	0/39	39
4LGG	SLACK ADJUSTERS, REAR {Gunite} Automatic	0/14	14

Docusign Envelope ID: 89F51965-5845-41EE-92A2-D6C7ACC47E7E

Code	Description	F/R Wt (lbs)	Tot Wt (lbs)
4SPA	AIR COMPRESSOR {Cummins} 18.7 CFM	37/1	38
4EDN	AIR DRYER {Bendix AD-9SI} with Heater, Includes Safety Valve	18/-1	17
4VLE	AIR DRYER LOCATION Mounted Inside Engine Compartment, Right Side	0/0	0
4VKH	AIR TANK LOCATION (2) Mounted Under Battery Box, Outside Right Rail, Under Cab	42/9	51
4732	DRAIN VALVE {Berg} with Pull Chain, for Air Tank	0/0	0
STEERING			
5PSA	STEERING GEAR {Sheppard M100} Power	25/-3	22
5708	STEERING COLUMN Tilting	15/1	16
5CAW	STEERING WHEEL 4-Spoke; 18" Dia., Black	0/0	0
DRIVELINES			
6DGG	DRIVELINE SYSTEM {Dana Spicer} 1710, for 4x2/6x2	4/24	28
EXHAUST SYSTEMS			
7BME	EXHAUST SYSTEM Horizontal Aftertreatment System, Frame Mounted Under Right Rail Back of Cab, Includes Single Short Horizontal Tail Pipe	0/0	0
7SCP	ENGINE EXHAUST BRAKE for Cummins ISB/B6.7/ISL/L9 Engine with Variable Vane Turbo Charger	0/0	0
ELECTRICAL SYSTEMS			
8000	ELECTRICAL SYSTEM 12-Volt, Standard Equipment Includes : DATA LINK CONNECTOR For Vehicle Programming and Diagnostics In Cab : HAZARD SWITCH Push On/Push Off, Located on Instrument Panel to Right of Steering Wheel : HEADLIGHT DIMMER SWITCH Integral with Turn Signal Lever : PARKING LIGHT Integral with Front Turn Signal and Rear Tail Light : STARTER SWITCH Electric, Key Operated : STOP, TURN, TAIL & B/U LIGHTS Dual, Rear, Combination with Reflector : TURN SIGNAL SWITCH Self-Cancelling for Trucks, Manual Cancelling for Tractors, with Lane Change Feature : TURN SIGNALS, FRONT Includes Reflectors and Auxiliary Side Turn Signals, Solid State Flashers; Flush Mounted : WINDSHIELD WIPER SWITCH 2-Speed with Wash and Intermittent Feature (5 Pre-Set Delays), Integral with Turn Signal Lever : WINDSHIELD WIPERS Single Motor, Electric, Cowl Mounted : WIRING, CHASSIS Color Coded and Continuously Numbered	0/0	0
8GXD	ALTERNATOR {Leece-Neville AVI160P2013} Brush Type, 12 Volt, 160 Amp Capacity, Pad Mount, with Remote Sense	0/0	0
8RPP	ANTENNA Shark Fin, Roof Mounted	1/0	1
8THB	BACK-UP ALARM Electric, 102 dBA	0/3	3
8VUX	BATTERY BOX Steel, with Plastic Cover, 25" Wide, 2-3 Battery Capacity, Mounted Right Side Under Cab	0/0	0

Docusign Envelope ID: 89F51965-5845-41EE-92A2-D6C7ACC47E7E

Code	Description	F/R Wt (lbs)	Tot Wt (lbs)
8MJT	BATTERY SYSTEM {Fleetrite} Maintenance-Free, (2) 12-Volt 1900CCA Total, Top Threaded Stud	10/4	14
8HAE	BODY BUILDER WIRING Rear of Frame; Includes Sealed Connectors for Tail/ Amber Turn/Marker/ Backup/Accessory Power/Ground and Sealed Connector for Stop/Turn	0/3	3
8XAH	CIRCUIT BREAKERS Manual-Reset (Main Panel) SAE Type III with Trip Indicators, Replaces All Fuses	0/0	0
8XNZ	HEADLIGHTS Halogen, with Daytime Running Lights	0/0	0
8WRB	HEADLIGHTS ON W/WIPERS Headlights Will Automatically Turn On if Windshield Wipers are Turned On	0/0	0
8XHN	HORN, AIR Single Trumpet, Black, with Lanyard Pull Cord	3/0	3
8540	HORN, ELECTRIC (2) Trumpet Style	1/0	1
8WWJ	INDICATOR, LOW COOLANT LEVEL with Audible Alarm	0/0	0
8XPK	POWER SOURCE, ADDITIONAL Auxiliary Power Outlet (APO) with USB-A Port and USB-C Port, Located in the Instrument Panel	0/0	0
8RPS	RADIO AM/FM/WB/Clock/Bluetooth/USB Input/Auxiliary Input	3/0	3
8RMV	SPEAKERS (2) 6.5" Dual Cone Mounted in Doors	5/0	5
8XKL	STARTING MOTOR {Mitsubishi Electric Automotive America 90P47} 12-Volt, with Soft-Start	0/0	0
8WPZ	TEST EXTERIOR LIGHTS Pre-Trip Inspection will Cycle all Exterior Lamps Except Back-up Lights	0/0	0
FRONT END			
9WBW	FRONT END Tilting, Fiberglass, with Three Piece Construction, Dual Air Intakes	0/0	0
9WBN	FENDER EXTENSIONS Painted	0/0	0
9HCY	GRILLE Molded in Black, with Chrome Surround	0/0	0
9AAB	LOGOS EXTERIOR Model Badges	0/0	0
9AAE	LOGOS EXTERIOR, ENGINE Badges	0/0	0
SPEEDOMETER, TOOLS, MISC			
10AGB	COMMUNICATIONS MODULE Telematics Device with Over the Air Programming; Includes Five Year Data Plan and International 360	0/0	0
10XAN	FIRE EXTINGUISHER 5 lb Class A B C	9/1	10
10XAP	FIRE EXTINGUISHER BRACKET Mounted Left Side Driver Seat	1/0	1
10VAA	KEYS - ALL ALIKE, ADDITIONAL 3 Keys	0/0	0
10WUE	MUD FLAPS, FRONT WHEELS (2) Rubber, Mounted on Fender Extension	12/0	12
10060	PAINT SCHEMATIC, PT-1 Single Color, Design 100	0/0	0
	Includes : PAINT SCHEMATIC ID LETTERS "WP"		
10761	PAINT TYPE Base Coat/Clear Coat, 1-2 Tone	0/0	0

Docusign Envelope ID: 89F51965-5845-41EE-92A2-D6C7ACC47E7E

Code	Description	F/R Wt (lbs)	Tot Wt (lbs)
10SLV	PROMOTIONAL PACKAGE Government Silver Package	0/0	0
10WCY	SAFETY TRIANGLES	6/0	6
FUEL TANKS			
15SRE	FUEL TANK Top Draw, Non-Polished Aluminum, D-Style, 19" Tank Depth, 50 US Gal (189L), Mounted Left Side, Under Cab	23/6	29
15WDG	DEF TANK 7 US Gal (26L) Capacity, Frame Mounted Outside Left Rail, Under Cab	0/0	0
15LMN	FUEL/WATER SEPARATOR {Racor 400 Series,} 12 VDC Electric Heater, Includes Pre-Heater, with Primer Pump, Includes Water-in-Fuel Sensor	-3/0	-3
15LRE	LOCATION FUEL/WATER SEPARATOR Mounted Under Hood, Left Side, Above Front Axle	0/0	0
WHEELS, TIRES - FRONT			
27DTU	WHEELS, FRONT {Accuride 29001} DISC; 22.5x7.50 Rims, Powder Coat Steel, 5-Hand Hole, 10-Stud, 285.75mm BC, Hub-Piloted, Flanged Nut, with Steel Hubs	0/0	0
7382135439	(2) TIRE, FRONT 11R22.5 Load Range H HSR 3 (CONTINENTAL), 494 rev/mile, 75 MPH, All-Position	78/0	78
WHEELS, TIRES - REAR			
28DTU	WHEELS, REAR {Accuride 29001} DUAL DISC; 22.5x7.50 Rims, Powder Coat Steel, 5-Hand Hole, 10-Stud, 285.75mm BC, Hub-Piloted, Flanged Nut, with Steel Hubs	0/0	0
7382135439	(4) TIRE, REAR 11R22.5 Load Range H HSR 3 (CONTINENTAL), 494 rev/mile, 75 MPH, All-Position	0/156	156
BODY INTEGRATION			
60AAA	BDY INTG, REMOTE POWER MODULE Mounted Under Cab or On Battery Box, Up to 6 Outputs & 6 Inputs, Max 20 amp per Channel, Max 80 amp Total; Includes 1 Switch Pack with Latched Switches	0/0	0
60AJD	BDY INTG, INDICATOR LIGHTS (2) 1 for Boom Out of Stow, 1 for Outriggers Deployed, Includes Audible Alarm and Interlock to Parking Brake, Programmable Mode for Various Switch Actions (requires 2 Remote Power Module inputs)	0/0	0
	Services Section:		
WARRANTY			
40129	WARRANTY Standard for MV Series, Effective with Vehicles Built July 1, 2017 or Later, CTS-2020A	0/0	0
40RBG	SERVICES, TOWING {Navistar} Service Call to 24-Month/Unlimited Mileage to the Nearest Navistar Dealer for Navistar Warrantable Failure as Contract Defined; Includes Engine Failure if Supplier Declines Tow Coverage & ESC Supplied thru Navistar; $550 (USA) Maximum Benefit per Incident	0/0	0
40YYK	SRV CONTRACT, EXT CMS ENG/AFTR {Cummins} To 60-Month/150,000 Miles (240,000 km), Extended Cummins B6.7 Engine Coverage, Protection Plan 1 and Aftertreatment, (Truck Application Only)	0/0	0

Docusign Envelope ID: 89F51965-5845-41EE-92A2-D6C7ACC47E7E

Code	Description	F/R Wt (lbs)	Tot Wt (lbs)
	Total Component Weight:	**6847/4239 (lbs)**	**11086 (lbs)**
1	Petersen Loader per specifications	0/0	0
2	DOT inspection, clean for deliver, local delivery	0/0	0
	Total Body Allied:	**0/0 (lbs)**	**0 (lbs)**

The weight calculations included in this proposal are an estimate of future vehicle weight. The actual weight as manufactured may be different from the estimated weight. Navistar, Inc. shall not be liable for any consequences resulting from any differences between the estimated weight of a vehicle and the actual weight.

Docusign Envelope ID: 89F51965-5845-41EE-92A2-D6C7ACC47E7E

INTERNATIONAL®

Financial Summary
2026 MV607 SBA (MV607)

September 19, 2024

(US DOLLAR)

Description		Price
Net Sales Price:		$194,984.00
Memo Item(s):		
Total Federal Excise Tax	$0.00	
Note: Memo item(s) shown here are included in the above Net Sales Price.		

Thank you for the opportunity to present this vehicle proposal for your consideration. Based on current market volatility and continued global supply chain issues, this proposal is valid for 30 days from date of proposal and subject to any additional government mandated or Navistar published price increases, commodity surcharges, emission surcharges, freight increases, etc. announced after this date. Please feel free to contact me regarding these specifications should your interests or needs change. I am confident you will be pleased with the quality and service of this International chassis.

Approved by Seller:

Official Title and Date

Authorized Signature

This proposal is not binding upon the seller without Seller's Authorized Signature

Accepted by Purchaser:

Firm or Business Name

Authorized Signature and Date

Official Title and Date

The TOPS FET calculation is an estimate for reference purposes only. The seller or retailer is responsible for calculating and reporting/paying appropriate FET to the IRS.

The limited warranties applicable to the vehicles described herein are Navistar, Inc.'s standard printed warranties which are incorporated herein by reference and to which you have been provided a copy and hereby agree to their terms and conditions.

Docusign Envelope ID: 89F51965-5845-41EE-92A2-D6C7ACC47E7E

SUBJECT: Purchasing of an International MV607 w/ Grapple Loader

BID #: SC-0419-22 **OPEN DATE: 8/17/2022**

GENERAL GOVERNMENT AWARDS COMMITTEE

KIND AND BASIS OF CONTRACT: Service Contract - Date of award through September 30, 2023 with two (2) one (1) year renewal options

AGENCY: Fleet Management

BASIS OF AWARD: ALL OR NONE TO THE LOWEST RESPONSIVE, RESPONSIBLE BIDDER(S)

NUMBER OF BIDS INVITED: (11) **NUMBER RECEIVED:** (2) **OTHER:** (0)

SUMMARY OF BIDS AND RECOMMENDED ACTIONS:
Recommend approval to utilize the first renewal option with Cumberland International Trucks of Florida, LLC. Period of service is October 1, 2023 through September 30, 2024, with one (1), one (1) year renewal option remaining. Revised estimated annual expenditure amount is $183,390.00. Total expenditure not to exceed $522,770.00.

Funding Source: 51102.114001.564010.000000.00000499.00000.000000 – To be encumbered by purchase order

Attachments: Recommendation Memo, Vendor Letter, Previous Awards

ANALYST: _____ **RESPECTFULLY SUBMITTED** _____
Corey Sidlo
DUSTIN FREEMAN, CHIEF
PROCUREMENT DIVISION

CONCURRENCE BY: Crisencio Tongol, Chief, Fleet Management Division

(ALL AWARD ACTIONS SUBJECT TO LAWFULLY APPROPRIATED FUNDS)
ACTION OF GGAC COMMITTEE ON RECOMMENDATIONS ABOVE

MEMBERS APPROVING 3 MEMBERS DISAPPROVING 0 DATE: 9/7/2023

OTHER: _____

ACTION OF AWARDING AUTHORITY DATE 9/7/2023

APPROVED ✓ DISAPPROVED _____

OTHER _____

SIGNATURE OF AUTHENTICATION Karen Bowling

Karen Bowling
Chief Administrative Officer
For: Mayor Donna Deegan
Under Authority Of:
Executive Order No: 2023-02

Docusign Envelope ID: 89F51965-5845-41EE-92A2-D6C7ACC47E7E

FINANCE AND ADMINSTRATION DEPARTMENT

FLEET MANAGEMENT DIVISION

Jacksonville

Where Florida Begins.

Date: August 22, 2023

To: Dustin Freeman, Chief of Procurement Division

Thru: Cris Tongol, Chief of Fleet Management

From: David Hylazewski, Equipment Control Administrator DH

Re: Recommendation to utilize the First (1st) Renewal option for SC-0419-22 Purchase of international MV607 w/Grapple Loader

Fleet Management request approval to utilize the First (1st) renewal option with Cumberland International Trucks of Florida, LLC in the amount of $183,390.00. This will be a 2025 Model with a $13,700.00 increase. Period of Service is October 1, 2023 through September 30, 2024, with one remaining renewal option. Total estimated annual revenue amount is $183,390.00. Total revised estimated expenditure not to exceed $522,770.00.

Funding Source: 51102.114001.564010.000000.00000499.00000.0000000

2581 Commonwealth Ave. Jacksonville, FL 32254 Phone: 904.255-7499 Fax: 904.381.4607 www.coj.net

Docusign Envelope ID: 89F51965-5845-41EE-92A2-D6C7ACC47E7E

2017 AND 2018 DEALER OF THE YEAR

Cumberland

TRUCK / IDEALEASE / BUS / FIRE / SPOTTER

CUMBERLAND-COMPANIES.COM

August 16, 2023

City of Jacksonville
Fleet Management Division
Jacksonville, Fl 32254

To whom it may concern,

With regards to SC-0419-22 award and 1st renewal option, purchase of MV607 w/grapple loader, Cumberland International accepts and wishes to exercise the option to renew with the attached escalation cost associated with said purchase.

This will be a 2025 International MV w/grapple loader as previously purchased, per the attached specifications.

Pricing for this unit will be $183,390.00, terms net 30 and delivered to Jacksonville Fleet Management, Commonwealth Ave, Jacksonville Florida. Current anticipated delivery is late Q3 or early Q4 of 2024.

The escalation in price is represented by a 5% MY'25 price increase from Navistar on the chassis due to model year (3%), and price book component increases (2%), including the newest EPA24 engine requirements. Additionally, I have included a copy of correspondence from Petersen, manufacturer of the loader of how the current supply chain and logistic challenges have impacted their cost structure and price for the grapple loader.

Please advise acceptance of this renewal option and we will place the applicable orders for chassis and body accordingly.

Respectfully submitted,

Michael O'Brien
Fleet Sales
Cumberland International
904-219-9766

CAPACITY

IDEALEASE

Docusign Envelope ID: 89F51965-5845-41EE-92A2-D6C7ACC47E7E

INTERNATIONAL®

August 16, 2023

Prepared For:
CITY OF JACKSONVILLE
David Hylazewski
117 W Duval St. Ste. 375
Jacksonville, FL 32202-5725
(904)255 - 7470
Reference ID: N/A

Presented By:
Cumberland International Trucks, Inc.
Michael O'Brien
1881 Pickettville Road
Jacksonville FL 32220 -
(904)783-9822

Model Profile
2025 MV607 SBA (MV607)

AXLE CONFIG:	4X2
MISSION:	Requested GVWR: 33000. Calc. GVWR: 33000. Calc. GCWR: 43000
DIMENSION:	Wheelbase: 254.00, CA: 186.90, Axle to Frame: 81.00
ENGINE, DIESEL:	{Cummins B6.7 200} EPA 2024, 200HP @ 2400 RPM, 600 lb-ft Torque @ 1600 RPM, 2600 RPM Governed Speed, 200 Peak HP (Max)
TRANSMISSION, AUTOMATIC:	{Allison 3500 RDS} 6th Generation Controls, Wide Ratio, 5-Speed with Overdrive, with PTO Provision, Less Retarder, Includes Oil Level Sensor, with 80,000-lb GVW and GCW Max, On/Off Highway
CLUTCH:	Omit Item (Clutch & Control)
AXLE, FRONT NON-DRIVING:	{Hendrickson Steertek NXT} Fabricated Type, 12,000-lb Capacity
AXLE, REAR, SINGLE:	{Dana Spicer S23-172} Single Reduction, 23,000-lb Capacity, R Wheel Ends Gear Ratio: 4.30
CAB:	Conventional, Day Cab
TIRE, FRONT:	(2) 11R22.5 Load Range H HSR 3 (CONTINENTAL), 494 rev/mile, 75 MPH, All-Position
TIRE, REAR:	(4) 11R22.5 Load Range H HSR 3 (CONTINENTAL), 494 rev/mile, 75 MPH, All-Position
SUSPENSION, REAR, SINGLE:	23,500-lb Capacity, Vari-Rate Springs, with 4500-lb Capacity Auxiliary Rubber Springs
PAINT:	Cab schematic 100WP Location 1: 9219, Winter White (Std) Chassis schematic N/A

Proposal: 9805-01

Docusign Envelope ID: 89F51965-5845-41EE-92A2-D6C7ACC47E7E

INTERNATIONAL®

Vehicle Specifications
2025 MV607 SBA (MV607)

August 16, 2023

Description	F/R Wt (lbs)	Tot Wt (lbs)
Base Chassis, Model MV607 SBA with 254.00 Wheelbase, 186.90 CA, and 81.00 Axle to Frame.	5354/2774	8128
AXLE CONFIGURATION		
AXLE CONFIGURATION {Navistar} 4x2	0/0	0
Notes : Pricing may change if axle configuration is changed.		
ENGINE		
ENGINE, DIESEL {Cummins B6.7 200} EPA 2024, 200HP @ 2400 RPM, 600 lb-ft Torque @ 1600 RPM, 2600 RPM Governed Speed, 200 Peak HP (Max)	0/0	0
EMISSION, CALENDAR YEAR {Cummins B6.7} EPA, OBD and GHG Certified for Calendar Year 2024	0/0	0
CARB EMISSION WARR COMPLIANCE Does Not Comply with CARB Emission Warranty	0/0	0
CARB IDLE COMPLIANCE Does Not Comply with California Clean Air Idle Regulations	0/0	0
EPA IDLE COMPLIANCE Low NOx Idle Engine, Complies with EPA Clean Air Regulations; Includes "Certified Clean Idle" Decal on Hood	0/0	0
RADIATOR Aluminum, 2-Row, Down Flow, Front to Back System, 640 Sqin Louvered, with 383 Sqin Charge Air Cooler, Includes In-Tank Oil Cooler	0/0	0
FAN DRIVE {Horton Drivemaster} Two-Speed Type, Direct Drive, with Residual Torque Device for Disengaged Fan Speed	11/-1	10
Includes : FAN Nylon		
AIR CLEANER Single Element, Fire Retardant Media	0/0	0
ANTI-FREEZE Red, Extended Life Coolant; To -40 Degrees F/ -40 Degrees C, Freeze Protection	0/0	0
BLOCK HEATER, ENGINE {Phillips} 120V/750W, for Cummins ISB/B6.7 Engines	0/0	0
Includes : BLOCK HEATER SOCKET Receptacle Type; Mounted below Drivers Door		
ENGINE CONTROL, REMOTE MOUNTED No Provision for Remote Mounted Engine Control	0/0	0
HOSE CLAMPS, RADIATOR HOSES {R.G. Ray Mini Flex Seal} Coil Spring/"T"-Bolt Constant Torque Type, for Radiator Hoses over 1" I.D.	0/0	0
OIL PAN 15 Quart Capacity, For Cummins ISB/B6.7 Engines	0/0	0
THROTTLE, HAND CONTROL Engine Speed Control for PTO; Electronic, Stationary Pre-Set, Two Speed Settings; Mounted on Steering Wheel	2/0	2
TRANSMISSION		
TRANSMISSION, AUTOMATIC {Allison 3500 RDS} 6th Generation Controls, Wide Ratio, 5-Speed with Overdrive, with PTO Provision, Less Retarder, Includes Oil Level Sensor, with 80,000-lb GVW and GCW Max, On/Off Highway	239/44	283
ALLISON SPARE INPUT/OUTPUT for Rugged Duty Series (RDS) and Regional Haul Series (RHS), General Purpose Trucks, Package Number 223, Modified for Single Input Auto Neutral	0/0	0
AUTOMATIC NEUTRAL Allison Transmission Shifts to Neutral When Parking Brake is Engaged and Remains in Neutral When Parking Brake is Disengaged, with On/Off Switch	0/0	0

Docusign Envelope ID: 89F51965-5845-41EE-92A2-D6C7ACC47E7E

INTERNATIONAL®

Vehicle Specifications
2025 MV607 SBA (MV607)

August 16, 2023

Description	F/R Wt (lbs)	Tot Wt (lbs)
NEUTRAL AT STOP Allison Transmission Shifts to Neutral When Service Brake Is Depressed and Vehicle is at Stop; Remains in Neutral Until Service Brake is Released	0/0	0
PTO CONTROL, DASH MOUNTED For Customer Provided PTO; Includes Switch, Electric/Air Solenoid, Piping and Wiring	3/0	3
PTO LOCATION Customer Intends to Install PTO at Left Side of Transmission	0/0	0
SHIFT CONTROL PARAMETERS (Allison) 3000 or 4000 Series Transmissions, Performance Programming	0/0	0
TRANSMISSION OIL Synthetic; 29 thru 42 Pints	0/0	0
TRANSMISSION SHIFT CONTROL Column Mounted Stalk Shifter, Not for Use with Allison 1000 & 2000 Series Transmission	1/0	1
CLUTCH		
CLUTCH Omit Item (Clutch & Control)	0/0	0
REAR AXLES, SUSPENSIONS		
AXLE, REAR, SINGLE (Dana Spicer S23-172) Single Reduction, 23,000-lb Capacity, R Wheel Ends . Gear Ratio: 4.30	0/311	311
SUSPENSION, REAR, SINGLE 23,500-lb Capacity, Vari-Rate Springs, with 4500-lb Capacity Auxiliary Rubber Springs	0/66	66
AXLE, REAR, LUBE (EmGard FE-75W-90) Synthetic Oil; 30 thru 39.99 Pints	0/0	0
SHOCK ABSORBERS, REAR (2)	0/45	45
FRONT AXLES		
AXLE, FRONT NON-DRIVING (Hendrickson Steertek NXT) Fabricated Type, 12,000-lb Capacity	39/0	39
FRONT SUSPENSIONS		
SUSPENSION, FRONT, SPRING Parabolic Taper Leaf, Shackle Type, 12,000-lb Capacity, with Shock Absorbers	36/0	36
Includes : SPRING PINS Rubber Bushings, Maintenance-Free		
CABS, COWLS, BODIES		
CAB Conventional, Day Cab	0/0	0
Includes : CLEARANCE/MARKER LIGHTS (5) Flush Mounted		
ACCESS, CAB Steel, Driver & Passenger Sides, Two Steps per Door, for use with Day Cab and Extended Cab	0/0	0
AIR CONDITIONER with Integral Heater and Defroster	56/0	56
CAB INTERIOR TRIM Classic, for Day Cab	0/0	0
Includes : CONSOLE, OVERHEAD Molded Plastic with Dual Storage Pockets, Retainer Nets and CB Radio Pocket; Located Above Driver and Passenger : DOME LIGHT, CAB Door Activated and Push On-Off at Light Lens, Timed Theater Dimming, Integral to Overhead Console, Center Mounted		

Docusign Envelope ID: 89F51965-5845-41EE-92A2-D6C7ACC47E7E

Description	F/R Wt (lbs)	Tot Wt (lbs)
: SUN VISOR (2) Padded Vinyl; 2 Moveable (Front-to-Side) Primary Visors, Driver Side with Toll Ticket Strap	42/0	42
CAB REAR SUSPENSION Air Suspension, for Mid Cab Height	1/0	1
FRESH AIR FILTER Attached to Air Intake Cover on Cowl Tray in Front of Windshield Under Hood	0/0	0
GAUGE CLUSTER Base Level; English with English Electronic Speedometer Includes : GAUGE CLUSTER DISPLAY: Base Level (3" Monochromatic Display), Premium Level (5" LCD Color Display); Odometer, Voltmeter, Diagnostic Messages, Gear Indicator, Trip Odometer, Total Engine Hours, Trip Hours, MPG, Distance to Empty/Refill for : GAUGE CLUSTER Speedometer, Tachometer, Engine Coolant Temp, Fuel Gauge, DEF Gauge, Oil Pressure Gauge, Primary and Secondary Air Pressure or Auxiliary Air Pressure (if Air Equipped) : WARNING SYSTEM Low Fuel, Low DEF, Low Oil Pressure, High Engine Coolant Temp, Low Battery Voltage (Visual and Audible), Low Air Pressure, Primary and Secondary (if Air Equipped)		
GAUGE, AIR CLEANER RESTRICTION (Filter-Minder) Mounted in Instrument Panel	2/0	2
GAUGE, OIL TEMP, AUTO TRANS for Allison Transmission	1/0	1
GRAB HANDLE, EXTERIOR (2) Black, Aluminum, for Cab Entry Mounted Left and Right Side at B-Pillar	4/0	4
INSTRUMENT PANEL Flat Panel	0/0	0
IP CLUSTER DISPLAY On Board Diagnostics Display of Fault Codes in Gauge Cluster	0/0	0
MIRRORS (2) Aero Pedestal, Power Adjust, Heated, Black Heads and Arms, 6.5" x 14" Flat Glass, Includes 6.5" x 6" Convex Mirrors, for 102" Load Width Notes : Mirror Dimensions are Rounded to the Nearest 0.5"	0/0	0
SEAT, DRIVER (National 2000) Air Suspension, High Back with Integral Headrest, Vinyl, Isolator, 1 Chamber Lumbar, with 2 Position Front Cushion Adjust, -3 to +14 Degree Angle Back Adjust	-15/-3	-18
SEAT, TWO-MAN PASSENGER (National) Fixed Back, Integrated Headrest in Both Occupant Positions, Vinyl, with Under Seat Storage Compartment	49/22	71
WINDOW, MANUAL (2) and Manual Door Locks, Left and Right Doors	0/0	0
FRAMES		
FRAME RAILS Heat Treated Alloy Steel (120,000 PSI Yield); 10.375" x 3.705" x 0.438" (263.5mm x 94.1mm x 11.1mm); 456.0" (11582mm) Maximum OAL	359/646	1005
BUMPER, FRONT Contoured, Steel, Painted Gloss Black	0/0	0
GVWR LIMITATION FOR FRAME Frame Rails Limited to 33,000 lb Maximum GVWR	0/0	0
TOW HOOK, FRONT (2) Frame Mounted	8/0	8
LICENSE PLATE HOLDER Includes Upper & Lower Mounting Plate Hardware, Mounted in Existing Holes in Front Bumper	3/0	3
WHEELBASE RANGE 199" (505cm) Through and Including 254" (645cm)	251/-251	0
BRAKES		
BRAKE SYSTEM, AIR Dual System for Straight Truck Applications Includes : BRAKE LINES Color and Size Coded Nylon : DRAIN VALVE Twist-Type	-37/-13	-50

Docusign Envelope ID: 89F51965-5845-41EE-92A2-D6C7ACC47E7E

Description	F/R Wt (lbs)	Tot Wt (lbs)
: GAUGE, AIR PRESSURE (2) Air 1 and Air 2 Gauges; Located in Instrument Cluster : PARKING BRAKE CONTROL Yellow Knob, Located on Instrument Panel : PARKING BRAKE VALVE For Truck : QUICK RELEASE VALVE On Rear Axle for Spring Brake Release: 1 for 4x2, 2 for 6x4 : SPRING BRAKE MODULATOR VALVE R-7 for 4x2, SR-7 with relay valve for 6x4/8x6		
AIR BRAKE ABS {Bendix AntiLock Brake System} 4-Channel (4 Sensor/4 Modulator) Full Vehicle Wheel Control System	9/21	30
BRAKE, PARKING Manual Push-Pull Pneumatic Parking Brake	1/0	1
BRAKES, FRONT {Meritor 15X4 Q-PLUS CAST} Air S-Cam Type, Cast Spider, Fabricated Shoe, Double Anchor Pin, Size 15" X 4", 13,200-lb Capacity	77/0	77
BRAKE CHAMBERS, FRONT AXLE {Bendix} 20 Sqin	16/0	16
SLACK ADJUSTERS, FRONT {Gunite} Automatic	14/0	14
BRAKES, REAR {Meritor 16.5X7 Q-PLUS CAST} Air S-Cam Type, Cast Spider, Fabricated Shoe, Double Anchor Pin, Size 16.5" X 7", 23,000-lb Capacity per Axle	0/195	195
BRAKE CHAMBERS, REAR AXLE {Bendix EverSure} 30/30 Sqin Spring Brake	0/39	39
SLACK ADJUSTERS, REAR {Gunite} Automatic	0/14	14
AIR COMPRESSOR {Cummins} 18.7 CFM	37/1	38
AIR DRYER {Bendix AD-9SI} with Heater, Includes Safety Valve	18/-1	17
AIR DRYER LOCATION Mounted Inside Engine Compartment, Right Side	0/0	0
AIR TANK LOCATION (2) Mounted Under Battery Box, Outside Right Rail, Under Cab	42/9	51
DRAIN VALVE {Berg} with Pull Chain, for Air Tank	0/0	0
STEERING		
STEERING GEAR {Sheppard M100} Power	25/-3	22
STEERING COLUMN Tilting	15/1	16
STEERING WHEEL 4-Spoke; 18" Dia., Black	0/0	0
DRIVELINES		
DRIVELINE SYSTEM {Dana Spicer} 1710, for 4x2/6x2	4/24	28
EXHAUST SYSTEMS		
EXHAUST SYSTEM Horizontal Aftertreatment System, Frame Mounted Under Right Rail Back of Cab, Includes Single Short Horizontal Tail Pipe	0/0	0
ENGINE EXHAUST BRAKE for Cummins ISB/B6.7/ISL/L9 Engine with Variable Vane Turbo Charger	0/0	0
ELECTRICAL SYSTEMS		
ELECTRICAL SYSTEM 12-Volt, Standard Equipment	0/0	0

Includes
: DATA LINK CONNECTOR For Vehicle Programming and Diagnostics In Cab
: HAZARD SWITCH Push On/Push Off, Located on Instrument Panel to Right of Steering Wheel
: HEADLIGHT DIMMER SWITCH Integral with Turn Signal Lever
: PARKING LIGHT Integral with Front Turn Signal and Rear Tail Light

Docusign Envelope ID: 89F51965-5845-41EE-92A2-D6C7ACC47E7E

INTERNATIONAL®

Vehicle Specifications
2025 MV607 SBA (MV607)

August 16, 2023

Description	F/R Wt (lbs)	Tot Wt (lbs)
: STARTER SWITCH Electric, Key Operated : STOP, TURN, TAIL & B/U LIGHTS Dual, Rear, Combination with Reflector : TURN SIGNAL SWITCH Self-Cancelling for Trucks, Manual Cancelling for Tractors, with Lane Change Feature : TURN SIGNALS, FRONT Includes Reflectors and Auxiliary Side Turn Signals, Solid State Flashers; Flush Mounted : WINDSHIELD WIPER SWITCH 2-Speed with Wash and Intermittent Feature (5 Pre-Set Delays), Integral with Turn Signal Lever : WINDSHIELD WIPERS Single Motor, Electric, Cowl Mounted : WIRING, CHASSIS Color Coded and Continuously Numbered		
ALTERNATOR {Leece-Neville AVI160P2013} Brush Type, 12 Volt, 160 Amp Capacity, Pad Mount, with Remote Sense	0/0	0
ANTENNA Shark Fin, Roof Mounted	1/0	1
BACK-UP ALARM Electric, 102 dBA	0/3	3
BATTERY BOX Steel, with Plastic Cover, 25" Wide, 2-3 Battery Capacity, Mounted Right Side Under Cab	0/0	0
BATTERY SYSTEM {Fleetrite} Maintenance-Free, (2) 12-Volt 1900CCA Total, Top Threaded Stud	10/4	14
BODY BUILDER WIRING Rear of Frame; Includes Sealed Connectors for Tail/Amber Turn/Marker/ Backup/ Accessory Power/Ground and Sealed Connector for Stop/Turn	0/3	3
CIRCUIT BREAKERS Manual-Reset (Main Panel) SAE Type III with Trip Indicators, Replaces All Fuses	0/0	0
HEADLIGHTS Halogen, with Daytime Running Lights	0/0	0
HEADLIGHTS ON W/WIPERS Headlights Will Automatically Turn on if Windshield Wipers are turned on	0/0	0
HORN, AIR Single Trumpet, Black, with Lanyard Pull Cord	3/0	3
HORN, ELECTRIC (2) Trumpet Style	0/0	0
INDICATOR, LOW COOLANT LEVEL with Audible Alarm	0/0	0
POWER SOURCE, ADDITIONAL Auxiliary Power Outlet (APO) with USB-A Port and USB-C Port, Located in the Instrument Panel	0/0	0
RADIO AM/FM/WB/Clock/Bluetooth/USB Input/Auxiliary Input	3/0	3
SPEAKERS (2) 6.5" Dual Cone Mounted in Doors	5/0	5
STARTING MOTOR {Mitsubishi Electric Automotive America 90P47} 12-Volt, with Soft-Start	0/0	0
TEST EXTERIOR LIGHTS Pre-Trip Inspection will Cycle all Exterior Lamps Except Back-up Lights	0/0	0
FRONT END		
FRONT END Tilting, Fiberglass, with Three Piece Construction, Dual Air Intakes	0/0	0
FENDER EXTENSIONS Painted	0/0	0
GRILLE Molded in Black, with Chrome Surround	0/0	0
LOGOS EXTERIOR Model Badges	0/0	0
LOGOS EXTERIOR, ENGINE Badges	0/0	0
SPEEDOMETER, TOOLS, MISC		
COMMUNICATIONS MODULE Telematics Device with Over the Air Programming; Includes Five Year Data Plan and International 360	0/0	0

Docusign Envelope ID: 89F51965-5845-41EE-92A2-D6C7ACC47E7E

Description	F/R Wt (lbs)	Tot Wt (lbs)
FIRE EXTINGUISHER 5 lb Class A B C	9/1	10
FIRE EXTINGUISHER BRACKET Mounted Left Side Driver Seat	1/0	1
MUD FLAPS, FRONT WHEELS (2) Rubber, Mounted on Fender Extension	12/0	12
PAINT SCHEMATIC, PT-1 Single Color, Design 100	0/0	0
Includes : PAINT SCHEMATIC ID LETTERS "WP"		
PAINT TYPE Base Coat/Clear Coat, 1-2 Tone	0/0	0
PROMOTIONAL PACKAGE Government Silver Package	0/0	0
SAFETY TRIANGLES	6/0	6
FUEL TANKS		
FUEL TANK Top Draw, Non-Polished Aluminum, D-Style, 19" Tank Depth, 50 US Gal (189L), Mounted Left Side, Under Cab	23/6	29
DEF TANK 7 US Gal (26L) Capacity, Frame Mounted Outside Left Rail, Under Cab	0/0	0
FUEL/WATER SEPARATOR {Racor 400 Series,} 12 VDC Electric Heater, Includes Pre-Heater, with Primer Pump, Includes Water-In-Fuel Sensor	-3/0	-3
LOCATION FUEL/WATER SEPARATOR Mounted Under Hood, Left Side, Above Front Axle	0/0	0
WHEELS, TIRES - FRONT		
WHEELS, FRONT {Accuride 29001} DISC; 22.5x7.50 Rims, Powder Coat Steel, 5-Hand Hole, 10-Stud, 285.75mm BC, Hub-Piloted, Flanged Nut, with Steel Hubs	0/0	0
(2) TIRE, FRONT 11R22.5 Load Range H HSR 3 (CONTINENTAL), 494 rev/mile, 75 MPH, All-Position	78/0	78
WHEELS, TIRES - REAR		
WHEELS, REAR {Accuride 29001} DUAL DISC; 22.5x7.50 Rims, Powder Coat Steel, 5-Hand Hole, 10-Stud, 285.75mm BC, Hub-Piloted, Flanged Nut, with Steel Hubs	0/0	0
(4) TIRE, REAR 11R22.5 Load Range H HSR 3 (CONTINENTAL), 494 rev/mile, 75 MPH, All-Position	0/156	156
BODY INTEGRATION		
BDY INTG, REMOTE POWER MODULE Mounted Under Cab or On Battery Box, Up to 6 Outputs & 6 Inputs, Max 20 amp per Channel, Max 80 amp Total; Includes 1 Switch Pack with Latched Switches	0/0	0
BDY INTG, INDICATOR LIGHTS (2) 1 for Boom Out of Stow, 1 for Outriggers Deployed, Includes Audible Alarm and Interlock to Parking Brake, Programmable Mode for Various Switch Actions (requires 2 Remote Power Module inputs)	0/0	0

Services Section:

WARRANTY		
WARRANTY Standard for MV Series, Effective with Vehicles Built July 1, 2017 or Later, CTS-2020A	0/0	0
SERVICES, TOWING {Navistar} Service Call to 36-Month/Unlimited Mileage to the Nearest Navistar Dealer for Navistar Warrantable Failure as Contract Defined; Includes Engine Failure if Supplier Declines Tow Coverage & ESC Supplied thru Navistar; $275 (USA) Maximum Benefit per Incident	0/0	0

Docusign Envelope ID: 89F51965-5845-41EE-92A2-D6C7ACC47E7E

INTERNATIONAL®

Vehicle Specifications
2025 MV607 SBA (MV607)

August 16, 2023

Description	F/R Wt (lbs)	Tot Wt (lbs)
SRV CONTRACT, EXT CMS ENG/AFTR {Cummins} To 60-Month/150,000 Miles (240,000 km), Extended Cummins B6.7 Engine Coverage, Protection Plan 1 and Aftertreatment, (Truck Application Only)	0/0	0
Total Component Weight:	**6815/4113** (lbs)	**10928** (lbs)
Petersen Model TL3 loader per specifications	0/0	0
Total Body Allied:	**0/0** (lbs)	**0** (lbs)

The weight calculations included in this proposal are an estimate of future vehicle weight. The actual weight as manufactured may be different from the estimated weight. Navistar, Inc. shall not be liable for any consequences resulting from any differences between the estimated weight of a vehicle and the actual weight.

Docusign Envelope ID: 89F51965-5845-41EE-92A2-D6C7ACC47E7E

INTERNATIONAL®

Financial Summary
2025 MV607 SBA (MV607)

August 16, 2023

(US DOLLAR)

Description		Price
Net Sales Price:		$183,390.00
Memo Item(s):		
Total Federal Excise Tax	$0.00	
Note: Memo item(s) shown here are included in the above Net Sales Price.		

Please feel free to contact me regarding these specifications should your interests or needs change. I am confident you will be pleased with the quality and service of an International vehicle.

Approved by Seller:

Fleet Sales 8/16/23

Official Title and Date

Authorized Signature

Accepted by Purchaser:

Firm or Business Name

Authorized Signature and Date

This proposal is not binding upon the seller without Seller's Authorized Signature

Official Title and Date

The TOPS FET calculation is an estimate for reference purposes only. The seller or retailer is responsible for calculating and reporting/paying appropriate FET to the IRS.

The limited warranties applicable to the vehicles described herein are Navistar, Inc.'s standard printed warranties which are incorporated herein by reference and to which you have been provided a copy and hereby agree to their terms and conditions.

Docusign Envelope ID: 89F51965-5845-41EE-92A2-D6C7ACC47E7E

Petersen Industries, Inc.
4000 SR 60 W
Lake Wales, FL 33859
Phone: (800) 930-5623
email: parts-service@petersenind.com

Quote

LIGHTNING LOADER

Quote No	Quote Date	Page
20231491	8/8/2023	1

Bill To:
MAUDLIN INTERNATIONAL
DBA CUMBERLAND
2110 SOUTH DIVISION AVE.
ORLANDO, FL 32805
US

Ship to:
MAUDLIN INTERNATIONAL
DBA CUMBERLAND
2110 SOUTH DIVISION
ORLANDO, FL 32805
US

END USER: Jacksonville, City of (FL)

Customer No	Slsman	Payment terms
1390	Bryce Otwell	Net 30

Loc	PPD/COL	Ship via	Ship Date
LW		Best Way	8/8/2023

Delivery Date: 60-90 Days ACA

Qty Ordered	UOM	Item No	Unit price	Disc	Extended price
1.00	EA	LOADER AS CONFIGURED BELOW Additional options to include: 24" Walk Thru			8.00
		Feature/Kit Components- LOADER			
1.00	EA	0.TL3 MODEL TL3 BASE LOADER	1.00		
1.00	EA	03.11SAI HEAVY DUTY SWING MOTOR	1.00		
1.00	EA	03.12 STD HT PED STANDARD HEIGHT PEDESTAL	1.00		
1.00	EA	10.16 HDHI HDHI OUTRIGGER STROBE	1.00		
1.00	EA	07.105860 STANDARD BUCKET 60"	1.00		
1.00	EA	10.04 BUWL BOOM-UP WARNING LIGHT/AUDIBLE ALARM	1.00		
1.00	EA	13.00 AO ADD'L OPTIONS AS DEFINED BELOW	1.00		
1.00	EA	12.36 HD HD CONTROL BOX THROTTLE ENGINE KILL & HORN	1.00		
1.00	EA	12.02 TP TANDEM PUMP IN LIEU OF SINGLE 18 GMP	1.00		
1.00	EA	12.08 RK TRIANGLE FLARE KIT	1.00		
1.00	EA	12.06 SLB FIRE EXTINGUISHER SLB	1.00		
1.00	EA	11.02 LBPIO LOADER SINGLE COLOR PI ORANGE	1.00		
1.00	EA	8.0 DUMP BODY AS CONFIGURED BELOW			8.00
		Feature/Kit Components- 8.0 DUMP BODY			
1.00	EA	8.29 2026-HDX MODEL HDX-2026 HARDOX BODY 1/8" SIDES, 3/16" FLOOR	1.00		
1.00	EA	8.36 PISWLCO PI SELF-WINDING LOAD COVERING DEVICE (ADD-ON)	1.00		
1.00	EA	8.72 OPRD SINGLE PIECE REAR DOOR (REPLACES STND BARN DOORS)	1.00		
1.00	EA	8.47 WL-BW WIRE LOOM FOR BODY WIRING	1.00		

Docusign Envelope ID: 89F51965-5845-41EE-92A2-D6C7ACC47E7E

Petersen Industries, Inc.
4000 SR 60 W
Lake Wales, FL 33859
Phone: (800) 930-5623
email: parts-service@petersenind.com

Quote

LIGHTNING LOADER

Quote No	Quote Date	Page
20231491	8/8/2023	2

Bill To
MAUDLIN INTERNATIONAL
DBA CUMBERLAND
2110 SOUTH DIVISION AVE.
ORLANDO, FL 32805
US

Ship to
MAUDLIN INTERNATIONAL
DBA CUMBERLAND
2110 SOUTH DIVISION
ORLANDO, FL 32805
US

END USER: Jacksonville, City of (FL)

Customer No	Slsman	Payment terms
1390	Bryce Otwell	Net 30

Loc	PPD/COL	Ship via	Ship Date
LW		Best Way	8/8/2023

Delivery Date: 60-90 Days ACA

Qty Ordered	UOM	Item No	Unit price	Disc	Extended price
1.00	EA	10.09 LED LED TYPE BODY LIGHTS, 15 EA.	1.00		
1.00	EA	10.10 LED FLASH AMBER LED FLASHERS IN REAR CORNER POST	1.00		
1.00	EA	8.77ANSI ANSI Z245 PACKAGE	1.00		
1.00	EA	11.02B BODY COLOR: BLACK	1.00		
1.00	EA	11.01 UTB UNDERCOAT TRASH BODY (BOTTOM)	1.00		

Michael O'Brien/904-219-9766

Signature

Date

SubTotal
Delivery
Tax
Total Quote

THE QUOTE TOTAL MAY NOT REFLECT MISCELLANEOUS CHARGES, FREIGHT OR SALES TAX

(C)2022 Petersen Industries

[redacted]

[redacted]

Docusign Envelope ID: 89F51965-5845-41EE-92A2-D6C7ACC47E7E

Letter#	:	G-814
Content Type	:	Sales Programs
Posted Date	:	06/06/2023
Effective Date	:	06/06/2023
Expiration Date	:	12/31/9999

APPLICABLE TO UNITED STATES DEALERS ONLY

June 2023 Price Page - All Truck Models

All U.S. Dealers

We are pleased to announce that a pricing update will be available on June 6, 2023, that will impact average vehicle prices for Model Year 2025.

This price update pertains only to EPA/48-state certified vehicles and warranties. Neither CARB compliant nor vehicles to be registered in California and Oregon can be priced at this time.

All pricing and sales codes related to CARB engine compliance will be available once CARB finalizes the 2024 regulations. Pricing will be communicated by means of a future revision to this letter.

The following table indicates average vehicle price adjustments, based on required standard chassis and option content pricing changes. It does not include Cummins CARB engine and ESC warranty pricing. The adjustment is the price increase from the October 14th, 2022 price pages.

International® Model	Model Year	Price Book % Increase[1] (RANGE)	Avg Model Year % Increase[2]	Total Avg MY25 Price Increase[4]
LT® RH™	MY25	0.3% - 4.0%	3.0%	3.3% - 7.0%
HX®	MY25	1.6% - 4.4%	3.0%	4.6% - 7.4%
HV™ MRD	MY25	1.6%	3.0%	4.6%
HV™ HDD	MY25	1.8%	3.0%	4.8%
MV™	MY25	1.7% - 2.0%	3.0%	4.7% - 5.0%
CV™[3]	MY24	6.0%	0%	6.0%
eMV™	MY25	0%	0%	0%

[1]Based on required standard changes, options price increases and GHG 2024 compliance charges for Cummins engines

[2]MY price increases include overall inflationary impact of parts, labor, standard warranty and transportation costs. This increase will be administered via SPA reduction.

[3]CV™ Series pricing: 2023 Surcharge and 2024 MY rolled into the base chassis

[4]The overall impact of these price changes in any particular instance will be dependent on the final vehicle specifications and any changes in standard equipment. Please review all standard and optional equipment availability and prices in the June 2023 Price Page before quoting your customers. Larger increases incur with

Docusign Envelope ID: 89F51965-5845-41EE-92A2-D6C7ACC47E7E

August 10, 2023

To Whom It May Concern:

Petersen Industries has recently completed its pricing audit for 2024 and has once again had to adjust its pricing upwards based on a number of cost increases we have either already incurred or been informed of occurring at the start of the new year. The highlights of these are listed below:

1) ***Steel*** Although certain steel markets have levelled off and even seen some price relief in recent months, this has not been the case for the materials specific to building loaders. The primary steel used is DOM Tubing. This particular tubing is used for the loader booms, pedestals, and outriggers. We have seen cost increases of over 300% on DOM tube alone. We have also received notice that for Q1 2024 they will be implementing a surcharge of $130-$200 per ton on all DOM tube received. For comparison sake, prior to the effects in 2021 from the COVID virus, we had never seen more than a 20% fluctuation in the cost of this material.

2) ***Purchased Components*** Because of the continuing supply chain constraints across all industries, most of our component suppliers have increased their pricing for 2024. This includes but is not limited to: hydraulic components (PTO's, pumps, valves, fittings, & hoses), electrical components, paint and solvents, fasteners, welding wire, welding gases, hydraulic fluids, and the list goes on. We are seeing increases from 5-15% on many of these items.

3) ***Inflation*** With another record year for inflation (Over 8%) we are experiencing cost increases across all aspects of business operations. This includes labor, insurance, benefits, and general maintenance and operating items.

No one predicted the after-effects of the worldwide COVID pandemic. The United States had average inflation of 1.6% the 10 previous years prior to 2021. Since then, inflation has been above 7 and closer to 8% as a national average. Because we are not immune to these conditions, we have had to adjust our product pricing accordingly to remain viable.

WWW.PETERSENIND.COM
4000 SR 60 West | Lake Wales, FL 33859-8234 | t 800.930.LOAD (5623) | p 863.676.1493 | f 863.676.6844

Docusign Envelope ID: 89F51965-5845-41EE-92A2-D6C7ACC47E7E

LIGHTNING LOADER
PETERSEN
INDUSTRIES

I understand the situation this puts the City of Jacksonville in and I appreciate your understanding. We remain committed to being the best equipment supplier we can be for the City.

Respectfully,

Casey Hardee
President/CEO

WWW.PETERSENIND.COM
4000 SR 60 West | Lake Wales, FL 33859-8234 | t 800.930.LOAD (5623) | p 863.676.1493 | F 863.676.6844

Docusign Envelope ID: 89F51965-5845-41EE-92A2-D6C7ACC47E7E

SUBJECT: Purchasing of an International MV607 w/ Grapple Loader

BID #: SC-0419-22 **OPEN DATE: 8/17/2022**

GENERAL GOVERNMENT AWARDS COMMITTEE

KIND AND BASIS OF CONTRACT: Service Contract - Date of award through September 30, 2023 with two (2) one (1) year renewal options

AGENCY: Fleet Management

BASIS OF AWARD: ALL OR NONE TO THE LOWEST RESPONSIVE, RESPONSIBLE BIDDER(S)

NUMBER OF BIDS INVITED: (11) **NUMBER RECEIVED: (2)** **OTHER: (0)**

SUMMARY OF BIDS AND RECOMMENDED ACTIONS:
Recommend approval to increase the award with Cumberland International Trucks of Florida, LLC in the amount of $169,690.00 to purchase a Claw Truck for FY23. Total revised estimated expenditure amount not-to-exceed $339,380.00.

Funding Source: 51103.114001.564010.000000.00000500.00000.000000 – To be encumbered by purchase order

Attachments: Recommendation Memo, Previous Award

ANALYST: Corey Sidlo **RESPECTFULLY SUBMITTED** DUSTIN FREEMAN, CHIEF PROCUREMENT DIVISION

CONCURRENCE BY: Crisencio Tongol, Chief, Fleet Management Division

(ALL AWARD ACTIONS SUBJECT TO LAWFULLY APPROPRIATED FUNDS)
ACTION OF GGAC COMMITTEE ON RECOMMENDATIONS ABOVE

MEMBERS APPROVING 3 MEMBERS DISAPPROVING 0 DATE: 12/1/2022

OTHER:

ACTION OF AWARDING AUTHORITY DATE 12/1/2022

APPROVED ✓ DISAPPROVED

OTHER

SIGNATURE OF AUTHENTICATION

:ian Hughes
:uief Administrative Officer
:: Mayor Lenny Curry
:nder Authority of:
xecutive Order No. 2019-02

Docusign Envelope ID: 89F51965-5845-41EE-92A2-D6C7ACC47E7E

SUBJECT: Purchasing of an International MV607 w/ Grapple Loader

BID #: SC-0419-22 **OPEN DATE: 8/17/2022**

GENERAL GOVERNMENT AWARDS COMMITTEE

KIND AND BASIS OF CONTRACT: Service Contract - Date of award through September 30, 2023 with two (2) one (1) year renewal options

AGENCY: Fleet Management

BASIS OF AWARD: ALL OR NONE TO THE LOWEST RESPONSIVE, RESPONSIBLE BIDDER(S)

NUMBER OF BIDS INVITED: (11) **NUMBER RECEIVED: (2)** **OTHER: (0)**

SUMMARY OF BIDS AND RECOMMENDED ACTIONS:
Recommend approval of award to Cumberland International Trucks of Florida, LLC as the lowest responsive, responsible bidder. Period of service is one year from date of award, with two (2) one (1) year renewal options. Estimated initial expenditure amount not-to-exceed $169,690.00.

Funding Source: 51103.114001.564010.000000.00000500.00000.000000 – To be encumbered by purchase order

Attachments: Recommendation Memo, Bid Tabulation, Terms & Conditions, Specifications

ANALYST: _____ Corey Sidle **RESPECTFULLY SUBMITTED** _____ GREGORY PEASE, CHIEF PROCUREMENT DIVISION

CONCURRENCE BY: Crisencio Tongol, Chief, Fleet Management Division

(ALL AWARD ACTIONS SUBJECT TO LAWFULLY APPROPRIATED FUNDS)
ACTION OF GGAC COMMITTEE ON RECOMMENDATIONS ABOVE

MEMBERS APPROVING 3 MEMBERS DISAPPROVING 0 DATE: 9/1/2022

_____ OTHER: _____

_____

_____

ACTION OF AWARDING AUTHORITY DATE 9/1/2022

APPROVED ✓ DISAPPROVED _____

OTHER _____

SIGNATURE OF AUTHENTICATION _____ Brian Hughes
Chief Administrative Officer
~~For: Mayor Lenny Curry~~
Under Authority of:
Executive Order No: 2019-02