10

SUBJECT: PIGGYBACK SCHOOL BOARD OF BREVARD COUNTY ITB-21-388B-MC LARGE CAFETERIA EQUIPMENT

BID #: POA-71387-24 **OPEN DATE:** 04/27/2021

JACKSONVILLE PROCUREMENT AWARD COMMITTEE

KIND AND BASIS OF CONTRACT: PIGGYBACK CONTRACT- FROM DATE OF EXECUTED CONTRACT THROUGH MAY 25, 2026.

AGENCY: JACKSONVILLE SHERIFF'S OFFICE

BASIS OF AWARD: PER PIGGYBACK CONTRACT

NUMBER OF BIDS INVITED: ( ) NUMBER RECEIVED: ( ) OTHER ( )

SUMMARY OF BIDS AND RECOMMENDED ACTIONS:
Recommend approval to Piggyback School Board of Brevard County ITB-21-388B-MC Large Cafeteria Equipment with International Restaurant Distributors, Inc.to purchase the Hobart Model No. FT1000E-Base, with the warranty for the Department of Corrections Pre-Trial Detention Facility. The period of service will be from the date of executed contract through May 25, 2026. The total not-to-exceed expenditure amount will be $253,971.87.

Funding to be encumbered by account 11522.551103.564290.000000.00001344.0000000, to be executed by formal contract through the Office of General Counsel.

Attachments: Recommendation Memo, Vendor Quote, Contract #ITB-21-388B-MC, Risk Approval

BUYER: Renata Barnett
RENATA BARNETT

RESPECTFULLY SUBMITTED _____
DUSTIN FREEMAN, CHIEF
PROCUREMENT DIVISION

CONCURRENCE BY: Kevin Goff, Director of Corrections

(ALL AWARD ACTIONS SUBJECT TO LAWFULLY APPROPRIATED FUNDS)
ACTION OF JPAC COMMITTEE ON RECOMMENDATIONS ABOVE

MEMBERS APPROVING _____ MEMBERS DISAPPROVING _____ DATE: _____

_____ _____ OTHER: _____

_____ _____

_____ _____

ACTION OF AWARDING AUTHORITY DATE _____

APPROVED _____ DISAPPROVED _____

OTHER _____

SIGNATURE OF AUTHENTICATION _____

To: Dustin Freeman
Chief of Procurement

Thru: Bill Clement, CPA
Chief of Budget

From: Kevin Goff KJM
Director of Corrections

Subject: Piggyback Request – School Board of Brevard County ITB 21 388B-MC Large Cafeteria Equipment

Date: June 17, 2024

The Jacksonville Sheriff's Office is requesting a piggyback award under Sections 126.211 and 126.309 of the ordinance code to procure Hobart Model No. FT1000E+Base from International Restaurant Distributors, Inc. We request authorization to utilize the School Board of Brevard County ITB 21 388 B-MC, which was competitively procured and awarded to International Restaurant Distributors, Inc. The contract is an active contract between the School Board of Brevard County and the supplier. We are requesting the award between the Jacksonville Sheriff's Office and International Restaurant Distributors, Inc. to purchase the Hobart Model No. FT1000E+Base, with the warranty, for the Department of Corrections Pre-Trial Detention Facility. The total not to exceed expenditure amount is $ 253,971.87, from account code 11522.551103.564290.000000.00001344.00000.0000000. We are requesting that purchase order be issued for this request.

Attached is a copy of quote from International Restaurant Distributors, Inc., contract with the supplier and a copy of ITB-21-388-B-MC. We are requesting authorization for the piggyback contract to be executed by the Office of General Council.

Attached of the Certificate of Liability Insurance and approval by Risk Management.

Please let me know if you require any additional information. Thank you for your assistance.

Quote

06/12/2024

To:
Jacksonville Detention Center
Roberta Graham
500 E. Adams Street
Jacksonville , FL 32202-2813
904-630-5794 (Contact)

Project:
Jacksonville Pretrial Detention
Dishwasher
500 E Adams St
Jacksonville, FL 32202

From:
International Restaurant Dist.
James Breig
150 Semoran Commerce Place
Apopka, FL 32703-4670
(407)886-6691
407-886-6691 1011 (Contact)

Job Reference Number: 23-00690

All Prices, Specifications & Availability are Subject to Change Without Notice.
Customer must verify electrical and plumbing requirements
Price includes removal of existing unit and installation of new dishwasher
Price includes a 2 year extended warranty beyond the standard 1 year warranty

Item	Qty	Description	Sell	Sell Total
1	1 ea	**DISHWASHER, FLIGHT TYPE** Hobart Model No. FT1000E+BASE Low energy series base model flight type dish machine, 58 gallons of final rinse consumption per hour, with dual rinse, hinged & insulated doors, sliding wash arms without caps, 16" round flange & microprocessor controls with delime notification, Free factory startup for installations within a 100 mile radius of a Hobart service office; installation beyond 100 miles will be charged at the quoted rate by the local Hobart service office ENERGY STAR®	$123,025.33	$123,025.33
	1 ea	All FT1000 models are to be quoted by Hobart's internal quotation group		
	1 ea	Standard warranty - 1-Year parts, labor & travel time during normal working hours within the USA		
	32 ea	Service Labor Hours for Base: Required machine assembly by Hobart Service - for assembly within 100 miles of a Hobart Service Office during normal business hours, with appropriate notice; beyond 100 miles to be quoted by Hobart Service. Includes assembly of this item only, final electrical or plumbing connections by others. For prevailing wage, or projects in correctional /other secure areas, please contact the local service office in advance or project may be subject to additional fees billed at time of assembly.	$151.11	$4,835.52

Item	Qty	Description	Sell	Sell Total
	1 ea	FT1000E-ASRONO Without Automatic Soil Removal (ASR)		
	1 ea	FT1000E-LPF025 Load Platform 2.5' (Total LOAD length is 2.5' load platform +3' prewash = 5'7")	$12,012.59	$12,012.59
	1 ea	FT1000E-DRSYES With Dual Rinse		
	1 ea	FT1000E-CTRSTD Standard Non-Split 8' Center Joined (Wash/Power Rinse/Dual Rinse)		
	1 ea	FT1000E-UNL056 5' 6" Unload Section Non Split	$19,311.20	$19,311.20
	1 ea	FT1000ETLG20.181 TLG - Total Length of load, center & unload section is: 20.181 feet (overall length)		
	1 ea	FT1000E-DRYONO Without Blower Dryer		
	1 ea	FT1000E-HGTSTD Standard Height		
	1 ea	FT1000E-EGRONO Without Energy Recovery System		
	1 ea	FT1000E-AERONO Without Advansys Energy Recovery (Ventless Technology)		
	1 ea	FT1000E-HTEELE Electric Heat	$3,166.41	$3,166.41
	1 ea	FT1000E-ELEOCD 480v/60/3-ph (HV)		
	1 ea	FT1000E-CBRONO Without Circuit Breaker		
	1 ea	FT1000E-CON005 (5) Service Connections (refer to specifications sheet for rated amps)		
	1 ea	FT1000E-BST015 15 kW Electric Booster	$9,427.18	$9,427.18
	1 ea	FT1000E-PIPSTD Standard Piping		
	1 ea	FT1000E-DIRORL Right to left operation		
	1 ea	FT1000E-ACLONO Without Auto Clean		
	1 ea	FT1000E-ADLONO Without Auto Delime		
	1 ea	NOTE: For water of 3-grains of hardness or more, Hobart suggests adding a water softener.		
	1 ea	FT1000E-DRNUNL Drain in Unload		
	1 ea	FT1000E-DORHNG Hinge doors, all sections		
	1 ea	FT1000-SECMED Standard Security = includes: security screws, lockable control box & locking doors, lockable cover over controls, hook mounted curtains, lockable ASR basket and enclosure panels lock downs (Appropriate level should be chosen by end-user needs; does NOT correspond to security level of prison)	$4,950.82	$4,950.82
	1 ea	FT1000E-CNVTIV TIVOLI II,III	$6,345.09	$6,345.09
	1 ea	FT1000E-ROD3TV With Cross Rods every 3rd row, Tivoli only (for 20.181 ' machine)	$2,531.76	$2,531.76
	1 ea	FT1000E-SEFONO Without SEF Options		
		NOTE: REPLACEMENT UNIT FOR SN 271193268		
			ITEM TOTAL:	**$185,605.90**
2	1 ea	**INSTALLATION**	$58,957.80	$58,957.80
		Hobart Model No. INSTALLATION Hobart Jacksonville Branch to receive at the site location a Hobart FT1000E+BASE, inspect for damage, prep,		

Item	Qty	Description	Sell	Sell Total
		move into location. Hobart to supply Forklift to receive and to move equipment. Hobart to supply dumpster for shipping material. Hobart to remove existing machine and haul away to be recycled. Hobart to move into location a Hobart FT1000E+BASE Electric. Loading dock is available on ground floor. Receive new FT1000 on site, uncrate and set in place. Make all final utility connections to existing utilities supplied by owner with-in 5' of unit. Hobart to Custom Fabricate a 16" Round S/S Duct to go from the machine to above ceiling. Hobart to fabricate and install a duct transition to go from the new round duct to the existing duct above ceiling. Hobart to have Custom Fabricator perform wielding on duct above the ceiling. All final connections with-in 5' of unit. All final utilities to be done by Hobart DOES NOT INCLUDE: Any and all building modifications to the plumbing and electrical services. Tax to be added at time of billing. All ceiling repair by owner. All Electrical Upgrades by Owner. Any and all duct work above ceiling and roof top fan. Containment walls by owner. All Floor and wall repairs by owner. Included: • Installations completed during normal business hours. Monday – Friday; 8:00am – 5:00pm • Disassembly, removal, and disposal of existing equipment to include disconnecting all utilities (water, drains, gas, electrical, duct work) • Receiving the equipment at the customers location • Getting the machine into the building and set up in place at installation location. Check for and report shipping damage. • Uncrating and un-skidding the machine • Setting center section in final location Page 2 of 3 • Final hook-ups (within 5 feet) to existing utilities • When Energy Recovery (ER) ordered, ensure baffles are installed in roof venting to prevent accidental Freezing of ER coil • Joining and sealing of all sections to include all internal connections including electrical cabling, flowback piping and pans, installation of conveyor, and assembly of blower dryer • Inspect utility connections to machine and make certain it is properly wired and plumbed • Plumbing and electrical connections should be made by		

Item	Qty	Description	Sell	Sell Total
		qualified worker who will observe all applicable sanitary codes, safety codes, and the National Electric Code • Inspection of machine after installation to make certain it is ready for operation, i.e., all joints properly sealed, motors running in proper directions, all controls functioning properly, etc. (Item 3 is not transferable to the dealer and shall remain the responsibility of the Hobart office.) • Removal of packaging materials and rubbish • Start-up to be performed by local Hobart office		
			ITEM TOTAL:	**$58,957.80**
3	1 ea	**WARRANTY** Custom Model No. WARRANTY Hobart Care Unlimited: M-F, 8am - 5pm, weekday coverage for all calls, unlimited number of calls, (1) business day response for emergency call, (3) business day response for non-emergency calls (2nd year extended warranty.	$9,408.17	$9,408.17
			ITEM TOTAL:	**$9,408.17**
			Total	$253,971.87

This item has an awarded Florida School Board Bid and may be "piggybacked".

This quote is based on the following active awarded competitive School Board bid. It contains net delivered prices after the contract discount is applied.

Brevard County School board
Bid No.:21-388-B-MC (kitchen/Culinary Equipment & Supplies Catalog)
Contract Expires: 05/25/2026

Manufacturer: Hobart
Contract Catalog Discount: 31.50%

Acceptance: _____ Date: _____

Printed Name: _____

Project Grand Total: $253,971.87

HOBART

Project _____
AIA # _____ SIS # _____
Item # _____ Quantity _____ C.S.I. Section 114000

COMMERCIAL DISHWASHERS

FT SERIES – FT1000e BASE ELECTRIC

FT1000*e* BASE ELECTRIC

Flight-Type Dishwashing Machine

Advansys model shown

Complies with EPA Reduction of Lead in Drinking Water Act 2014

Meets requirements of ASSE Standard No. 1004

SPECIFIER STATEMENT

The specified machine shall be a Hobart flight type dish machine, 58 gallons of final rinse consumption per hour, with dual rinse, hinged & insulated doors, 30" wide conveyor belt, sliding wash arms without caps, & microprocessor controls.

STANDARD FEATURES

- Pumped rinse system (pressure gauge not required)
- Water usage 58 gph
- Digital controls with machine diagnostics
- Low temperature alert
- Hinged insulated cabinet-style doors
- 31" access on prewash, power wash and power rinse chambers; 20" access on dual rinse and ASR chambers
- Start and stop switches at both ends
- Doors open indicator
- Drains open indicator
- Door interlocks
- 3½ H.P. prewash, power wash, and power rinse pump motors, all TEFC
- Capless auto clean wash arms
- Easy to remove stainless steel scrap pans and baskets
- 30" wide conveyor belt
- Dual rinse
- Front and rear panels
- Variable speed conveyor
- Electric booster heater
- Configurable drain to load or unload

OPTIONS & ACCESSORIES (Available at extra cost)

- ❑ Insulated split, vertical slide-up doors
- ❑ Multiple conveyor options
- ❑ Factory mounted circuit breakers
- ❑ Correctional packages – standard, medium and maximum options (Contact Hobart for details)
- ❑ Casino packages
- ❑ 6" higher than standard chamber
- ❑ Flanged feet
- ❑ Water hammer arrestor/PRV (installed by others)
- ❑ Drain water tempering kit (installed by others)
- ❑ WS-80 water softener

HOBART

FT1000e BASE ELECTRIC

Flight-Type Dishwashing Machine

(Left to Right)

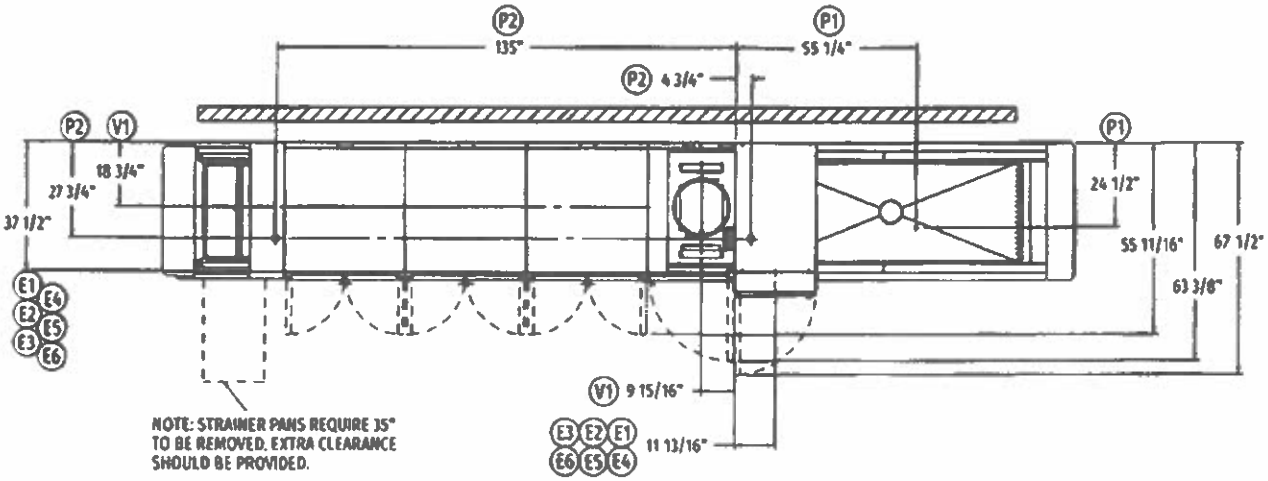

Top View Left to Right

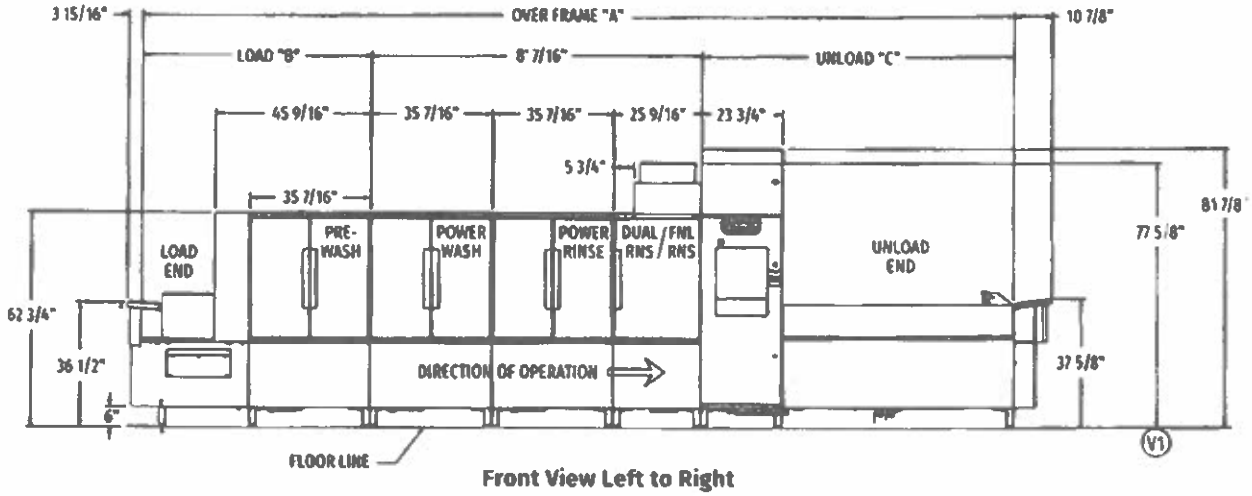

Front View Left to Right

Note: Control box electrical connections – see page 5.

MODEL NO.	"A"	"B"	"C"
FT1019e (5.5'-8'-5.5')	19' 2-3/8"	5' 6-15/16"	5' 7"
FT1020e (6.5'-8'-5.5')	20' 2 1/8"	6' 6-11/16"	5' 7"
FT1021e (7.5'-8'-5.5')	21' 1-31/32"	7' 6-17/32'	5' 7"
FT1021e (5.5'-8'-7.5')	21' 1-7/8"	5' 6-15/16"	7' 6-1/2"
FT1022e (6.5'-8'-7.5')	22' 1-5/8"	6' 6-11/16"	7' 6-1/2"
FT1023e (7.5'-8'-7 5')	23' 1-15/32"	7' 6-17/32"	7' 6-1/2"
FT1023e (5.5'-8'-9')	22' 9-5/8"	5' 6-15/16"	9' 2-1/4"
FT1024e (6.5' 8'-9')	23' 9-3/8"	6' 6-11/16"	9' 2-1/4"
FT1025e (7.5'-8'-9')	24' 9-7/32"	7' 6-17/32"	9' 2-1/4"
FT1025e (5.5'-8' 11')	24' 9-1/4"	5 6-15/16"	11' 1-7/8"
FT1026e (6.5'-8'-11')	25' 9"	6' 6-11/16"	11' 1-7/8"
FT1027e (7.5'-8' 11')	26' 8-27/32"	7' 6-17/32'	11' 1-7/8"
FT1028e (5.5'-8'-15')	28' 4-9/16"	5' 6-15/16"	14' 9-3/16"
FT1029e (6.5'-8'-15')	29' 4-5/16"	6' 6-11/16"	14' 9-3/16"
FT1030e (7.5'-8'-15')	30' 4-5/32"	7' 6-17/32"	14' 9-3/16"
FT1030e (5.5'-8'-17')	30' 4-1/8"	5' 6-15/16"	16' 8-3/4"
FT1031e (6.5'-8'-17')	31' 3-7/8"	6' 6-11/16"	16' 8-3/4"
FT1032e (7.5'-8'-17')	32' 3-23/32"	7' 6-17/32"	16' 8-3/4"

Note: Overall length of machine is Dimension "A" + 14 13/16"

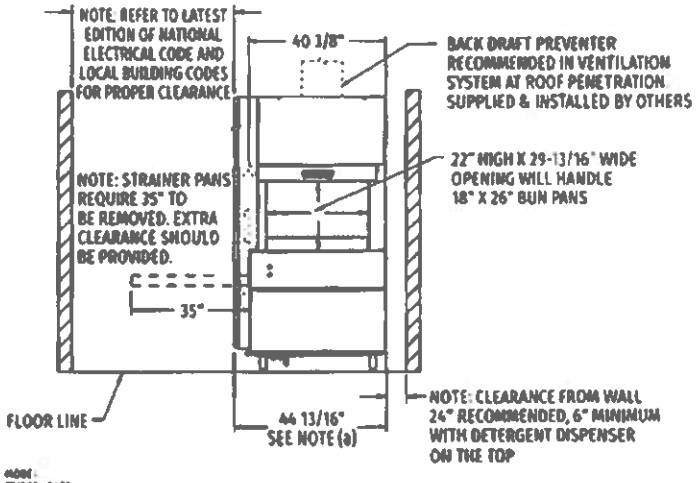

Back/Unload End

HOBART

FT1000*e* BASE ELECTRIC

Flight-Type Dishwashing Machine

(Right to Left)

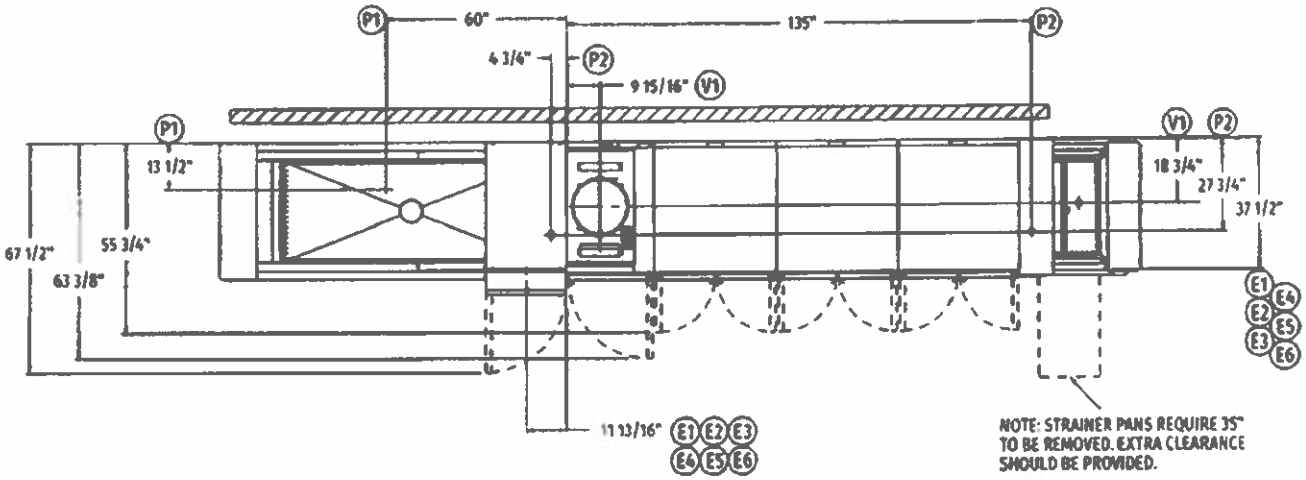

Top View Right to Left

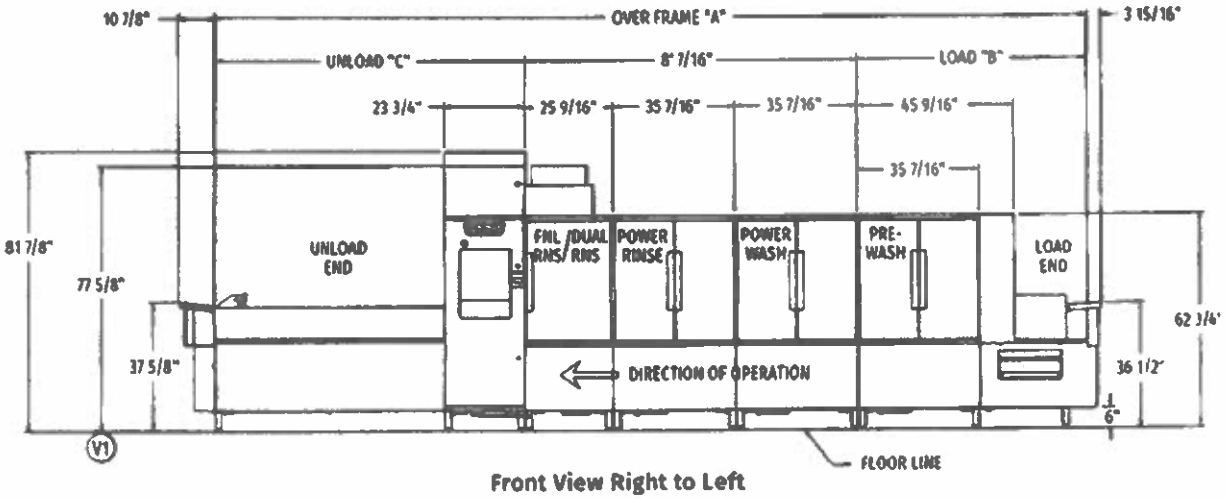

Front View Right to Left

Note: Control box electrical connections – see page 5.

MODEL NO.	"A"	"B"	"C"
FT1019*e* (5.5'-8'-5.5')	19' 2-3/8"	5' 6-15/16'	5' 7"
FT1020*e* (6.5'-8'-5.5')	20' 2-1/8"	6' 6-11/16"	5' 7"
FT1021*e* (7.5'-8'-5.5')	21' 1-31/32"	7' 6-17/32"	5' 7"
FT1021*e* (5.5'-8'-7.5')	21' 1-7/8"	5' 6-15/16"	7' 6-1/2"
FT1022*e* (6.5'-8'-7.5')	22' 1-5/8"	6' 6-11/16"	7' 6-1/2"
FT1023*e* (7.5'-8'-7.5')	23' 1-15/32"	7' 6-17/32"	7' 6-1/2"
FT1023*e* (5.5'-8'-9')	22' 9-5/8"	5' 6-15/16"	9' 2-1/4"
FT1024*e* (6.5'-8'-9')	23' 9-3/8"	6' 6-11/16"	9' 2-1/4"
FT1025*e* (7.5'-8'-9')	24' 9-7/32"	7' 6-17/32"	9' 2-1/4"
FT1025*e* (5.5'-8'-11')	24' 9-1/4"	5' 6-15/16"	11' 1-7/8"
FT1026*e* (6.5'-8'-11')	25' 9"	6' 6-11/16"	11' 1-7/8"
FT1027*e* (7.5'-8'-11')	26' 8-27/32"	7' 6-17/32"	11' 1-7/8"
FT1028*e* (5.5'-8'-15')	28' 4-9/16"	5' 6-15/16"	14' 9-3/16"
FT1029*e* (6.5'-8'-15')	29' 4-5/16"	6' 6-11/16"	14' 9-3/16"
FT1030*e* (7.5'-8'-15')	30' 4-5/32"	7' 6-17/32"	14' 9-3/16"
FT1030*e* (5.5'-8'-17')	30' 4-1/8"	5' 6-15/16"	16' 8-3/4"
FT1031*e* (6.5'-8'-17')	31' 3-7/8"	6' 6-11/16"	16' 8-3/4"
FT1032*e* (7.5'-8'-17')	32' 3-23/32"	7' 6-17/32"	16' 8-3/4"

Note: Overall length of machine is Dimension "A" + 14-13/16"

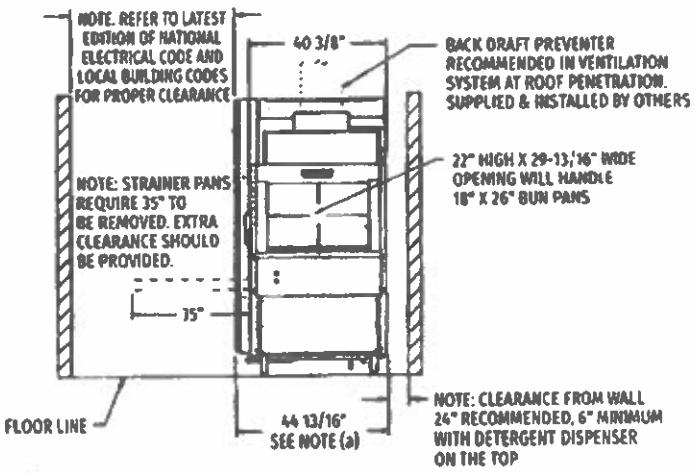

Back/Unload End

HOBART

FT1000e BASE ELECTRIC
Flight-Type Dishwashing Machine

LEGEND

Electrical Connections	
E1	Electric connection for 1TB with or without circuit breakers. 79-1/8" AFF.
E2	Electric connection for 2TB without circuit breakers. 79-1/8" AFF.
E3	Electric connection for 3TB without circuit breakers. 79-1/8" AFF.
E4	Electric connection for 4TB without circuit breakers. 79-1/8" AFF.
E5	Electric connection for 5TB without circuit breakers. 79-1/8" AFF.
E6	Electric connection for 2TB with circuit breakers. 79-1/8" AFF.
Plumbing Connections	
P1	Common hot water connection (automatic fill) 110°F water minimum, 1" FPT, 5-1/2" AFF.
P2	Drain connection: Default location is drain to unload. May be drained to either end of unit. 2" FPT, 7" AFF.
Ventilation Connections	
V1	Customers' vent connection. Must fit inside 16" diameter vent stack providing 750 CFM exhaust at machine connection @ .75" water column (standard air conditions). Back draft damper is RECOMMENDED ON ALL BAS models. 77-5/8" AFF.

SERVICE CONNECTIONS WITH CIRCUIT BREAKERS (2 CONNECTIONS)

E1	Motors, Controls, Power Rinse & Booster Heat (1TB) (1) Service Connection as Shown Below		
Voltage	**Rated Amps**	**Minimum Supply Circuit Ampacity**	**Maximum Protective Device**
208/60/3	139.0	175	175
240/60/3	125.6	175	175
480/60/3	66.9	90	90

E6	Wash, Dual Rinse Heat (2TB) (1) Service Connection as Shown Below		
Voltage	**Rated Amps**	**Minimum Supply Circuit Ampacity**	**Maximum Protective Device**
208/60/3	79.7	100	100
240/60/3	69.0	90	90
480/60/3	34.5	45	45

WARNING: Plumbing and electrical connections should be made by qualified personnel who will observe all the applicable plumbing, sanitary, safety codes and National Electrical Code.

General Notes:

(a) The control box is attached to the center section and is rotated 90 degrees for shipping.

AFF = Above Finished Floor

All dimensions taken from the floor line may increase 3-1/4" with leg adjustment.

For convenience when cleaning, customer should install water tap near machine with 30 ft. of heavy duty hose with squeeze valve.

This drawing is supplied as a reference for connection information only. It will not be utilized for manufacturing of unit.

Electrical Notes:

Service wire temperature rating: 90°C minimum.

Detergent and rinse aid feeder service connections standard on all FT1000e models at machine line voltage.

Plumbing Notes:

Recommended building flowing hot water pressure to the dishwasher is 30-35 PSI

Water hammer arrestor (meeting ASSE-1010 standard or equivalent) to be supplied (by others) in hot supply line at service connection.

Ventilation Notes:

Room ventilation is required to handle machine's latent & sensible heat. Majority of latent/sensible heat at unload end of machine.

Vent fan control standard on all FT1000e models.

Water Quality Required:

Total water hardness < 3 grains per gallon

Total suspended solids (TSS) < 10 microns

Heat Gain to Space (BTU/Hr.)	
Latent	**Sensible**
72,200	30,900

HOBART

FT1000e BASE ELECTRIC
Flight-Type Dishwashing Machine

SERVICE CONNECTION WITH CIRCUIT BREAKERS (SINGLE POINT ELECTRICAL CONNECTION)

E1	Motors, Controls, Dual Rinse & Power Rinse (1TB), Wash & Booster Heat		
Voltage	Rated Amps	Minimum Supply Circuit Ampacity	Maximum Protective Device
480/60/3	101.4	150	150

SERVICE CONNECTIONS WITHOUT CIRCUIT BREAKERS (5 CONNECTIONS)

E1	Motors & Controls (1TB) (1) Service Connection as Shown Below		
Voltage	Rated Amps	Minimum Supply Circuit Ampacity	Maximum Protective Device
208-240/60/3	38.0	50	50
480/60/3	23.1	30	30
E2	**Electric Tank Heat, Power Rinse (2TB) (1) 21.4 kW Connection as Shown Below**		
Voltage	Rated Amps	Minimum Supply Circuit Ampacity	Maximum Protective Device
208/60/3	59.4	80	80
240/60/3	51.5	70	70
480/60/3	25.7	35	35
E3	**Electric Tank Heat, Wash (3TB) (1) 18 kW Connection as Shown Below**		
Voltage	Rated Amps	Minimum Supply Circuit Ampacity	Maximum Protective Device
208/60/3	50.0	70	70
240/60/3	43.3	60	60
480/60/3	21.7	30	30
E4	**Electric Tank Heat, Dual Rinse (4TB) (1) 10.7 kW Service Connection as Shown Below**		
Voltage	Rated Amps	Minimum Supply Circuit Ampacity	Maximum Protective Device
208/60/3	29.7	40	40
240/60/3	25.7	35	35
480/60/3	12.9	20	20
E5	**Electric Booster (5TB) (1) 15 kW Connection as Shown Below**		
Voltage	Rated Amps	Minimum Supply Circuit Ampacity	Maximum Protective Device
208/60/3	41.6	60	60
240/60/3	36.1	50	50
480/60/3	18.0	25	25

SPECIFICATIONS

Capacities

- Conveyor Speed (feet per minute) ..... 4.0 - 8.5
- Dishes per Hour 14,316
- Pre Wash Tank (U.S. gallons) 40
- Wash Tank (U.S. gallons) 40
- Rinse Tank (U.S. gallons) 40
- Dual Rinse Tank (U.S. gallons) 7.2

Motor Horsepower

- Pre-Wash Tank 3½
- Wash Tank 3½
- Rinse Tank 3½
- Dual Rinse Tank ..... ¾
- Final Rinse ..... ¾
- Conveyor ..... ¾

Water Consumption

- U.S. Gallons per Hour (maximum use) 58
- U.S. Gallons per Minute 0.97

Heating

- Tank Heat, Electric (kW regulated) ..... Total tank heat 50.1 kW (Wash, Rinse, Dual Rinse)
- Electric Booster (kW) 15

Shipping Weight (approximate) ... Varies by individual model (Consult your Hobart representative)

Crated Dimensions ..... Varies by individual model (Consult your Hobart representative)

FT1000 Advansys Water Treatment System	
Model	Description
WS-80	Water Softener
Available through Hobart Service only	
PF-10-EHT	Hi-Temp Filter Housing
SD-510HT	Sediment Filter Cartridge

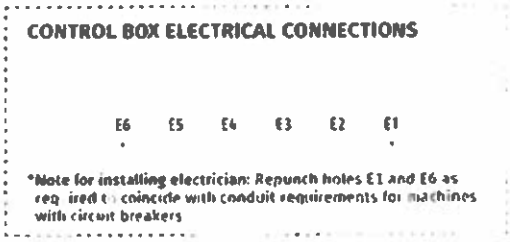

Detail "A-A"
(not to scale)

As continued product improvement is a policy of Hobart, specifications are subject to change without notice

School Board of Brevard County
2700 Judge Fran Jamieson Way
Viera, FL 32940-6601
Mark J. Rendell, Ed.D., Superintendent

Brevard Public Schools

November 15, 2023

Michael Schutz
International Restaurant Distributors, Inc.
P.O. Box 1437
Apopka, FL 32704

Mike@irdequipment.com

RE: ITB-21-388-B-MC Large Cafeteria Equipment RENEWAL REQUEST

Dear Michael Schutz:

Our current contract with your firm expires on May 25, 2024. Pending your approval, we would like to renew this contract for an additional two (2) year period. The bid's terms and conditions allow for one (1) two (2) year renewal of the contract under the same terms and conditions if agreeable to both parties.

The renewal period would begin on May 26, 2024, and expire on May 25, 2026. If you agree to renewing the contract, please sign electronically below and return to the email listed below by December 1, 20233.

Please contact Michelle Cherry, Senior Procurement Agent at 321-633-1000, ext. 11630 or by email at cherry.cynthia@Brevardschools.org if you should have any questions. Thank you for your past services, and we look forward to working with you in the future.

Sincerely,

KRodriguez Digitally signed by Rodriguez,Kristine@Procurement and Distribution Services Date: 2023.11.15 14:44:26 -05'00'

Kristine Rodriguez, MBA, NIGP-CPP, CPPO, CPPB
Director of Procurement & Distribution Services

International Restaurant Distributors, Inc. agrees to a two-year renewal of ITB-21-388-B-MC Large Cafeteria Equipment until May 26, 2026. The terms and conditions of the solicitation remain in full force and effect except for the term which is renewed by this letter.

	Jim Breig Chief Operating Officer	12/14/23
Signature	Printed Name and Title	Date

Brevard Public Schools

THE SCHOOL BOARD OF BREVARD COUNTY, FLORIDA

PROCUREMENT AND DISTRIBUTION SERVICES
2700 Judge Fran Jamieson Way
Viera, FL 32940

INVITATION TO BID
BIDDER'S ACKNOWLEDGEMENT

The School Board of Brevard County, Florida (School Board), solicits your company to submit a Bid. All terms, specifications, and conditions set forth in this ITB are incorporated by this reference into a submitted Bid. A Bid will not be considered responsive unless all conditions have been met. In the event of a conflict between the documents related to this ITB, the following order of precedence shall apply: Scope of Work, Special Terms & Conditions, Standard Terms & Conditions, and General Terms & Conditions. **All Bids must have an authorized signature in the space provided below.** All Bids must be received in the VendorLink online system on behalf of the School Board by the "Bid Due Date & Time." Bids may not be withdrawn for a period of sixty (60) days after the "Bid Due Date & Time" unless otherwise specified.

THE FOLLOWING MUST BE COMPLETED, SIGNED, AND RETURNED AS PART OF YOUR BID.
BIDS WILL NOT BE ACCEPTED WITHOUT THIS FORM, SIGNED BY AN AUTHORIZED AGENT OF THE BIDDER.

ITB NUMBER & TITLE: 21-388-B-MC Large Cafeteria Equipment

LEGAL COMPANY NAME: International Restaurant Distributors, Inc.
(AS REGISTERED IN WWW.SUNBIZ ORG OR AS REGISTERED IN YOUR STATE)

MAILING ADDRESS: PO Box 1437

CITY, STATE, ZIP: Apopka, FL 32704

FEDERAL EMPLOYER IDENTIFICATION NUMBER (FEIN): 59 2394675

FLORIDA DIVISION OF CORPORATIONS DOCUMENT NUMBER: G78278

I CERTIFY THAT THIS BID IS MADE WITHOUT PRIOR UNDERSTANDING, AGREEMENT, OR CONNECTION WITH ANY OTHER BIDDER SUBMITTING A BID FOR THE SAME MATERIALS, SUPPLIES, EQUIPMENT OR SERVICES, AND IS IN ALL RESPECTS FAIR AND WITHOUT COLLUSION OR FRAUD. I AGREE TO ABIDE TO ALL CONDITIONS OF THIS ITB AND CERTIFY THAT I AM AUTHORIZED TO SIGN THIS BID FOR THE BIDDER.

BY SIGNING, I CERTIFY THAT I AGREE AND COMPLY FULLY WITH THE REQUIREMENTS FOUND IN THE SECTIONS BELOW:

I. DRUG FREE WORKPLACE CERTIFICATION
II. INSTRUCTIONS FOR DEBARMENT CERTIFICATION
III. CERTIFICATION REGARDING DEBARMENT, SUSPENSION INELIGIBILITY AND VOLUNTARY EXCLUSION – LOWER TIER COVERED TRANSACTIONS
IV. EMERGENCY / STORM RELATED CATASTROPHE ACKNOWLEDGEMENT
V. NOTIFICATION REGARDING PUBLIC ENTITY CRIME AND DISCRIMINATORY VENDOR LISTS
VI. PROHIBITION AGAINST CONTRACTING WITH SCRUTINIZED COMPANIES
VII. CONFLICT OF INTEREST
VIII. CONFIDENTIAL MATERIALS ACKNOWLEDGEMENT

I RECOGNIZE THAT THE SCHOOL BOARD RESERVES THE RIGHT TO REJECT ANY OR ALL BIDS, TO WAIVE INFORMALITIES, AND TO ACCEPT ALL OR ANY PART OF ANY BID AS IT DEEMS TO BE IN THE BEST INTEREST OF THE SCHOOL BOARD.

AUTHORIZED SIGNATURE: Lynne Jones

NAME: Lynne Jones

TITLE: Government Sales

DATE: 4/27/2021

Additional Bid Submittal Requirements:

A. Local Business Tax Receipts

The jurisdiction in which the permanent business location resides Orange / Apopka (County/City).

The above listed jurisdiction (must check one):

☒ Does issue local business tax receipts (formerly known as occupational licenses) and a copy of the local business tax receipt is included with bid submittal.

☐ Does not issue local business tax receipts.

☐ This does not apply as Bidder is exempt. Bidder must state reason of exemption and include documentation from jurisdiction stating exemption with bid submittal. _____

B. Bidder's Principal Place of Business

Identify state in which Bidder has its principal place of business: Florida

If Bidder's principal place of business is outside of the state of Florida, Bidder must complete the form *Bidder's Statement of Principal Place of Business.*

C. Bankruptcy/Litigation

Is your company in the process of any bankruptcy proceedings as herein described?
YES ◯ NO ⊗

Is your company involved in any litigation as herein described?
YES ◯ NO ⊗

D. Payment Information

Do you accept electronic funds transfer (ETF)?
YES ⊗ NO ◯

If yes, does your firm offer a discount? _____%

Do you accept Purchase/Payment by Visa card?
YES ◯ NO ⊗

PRIMARY CONTACT NAME: Lynne Jones

PRIMARY CONTACT TELEPHONE NUMBER: 407-886-6691 x1015

PRIMARY CONTACT E-MAIL: lynne@lrdequipment.com

SECONDARY CONTACT NAME: Michael Schutz

SECONDARY CONTACT TELEPHONE NUMBER: 407-886-6691 x1002

SECONDARY CONTACT E-MAIL: mike@lrdequipment.com

STANDARD TERMS AND CONDITIONS

*** * * PLEASE READ CAREFULLY * * ***

I. DRUG FREE WORKPLACE CERTIFICATION

In accordance with Florida Statute 287.087, preference shall be given to businesses with drug-free workplace programs. Whenever two or more bids, proposals, or replies that are equal with respect to price, quality, and service are received by the state or by any political subdivision for the procurement of commodities or contractual services, a bid, proposal, or reply received from a business that certifies that it has implemented a drug-free workplace program shall be given preference in the award process. Established procedures for processing tie proposals will be followed if none of the tied Bidders have a drug-free workplace program. In order to have a drug-free workplace program, a business shall:

A. Publish a statement notifying employees that the unlawful manufacture, distribution, dispensing, possession or use of a controlled substance is prohibited in the workplace and specifying the actions that will be taken against employees for violations of such prohibition.

B. Inform employees about the dangers of drug abuse in the workplace, the business's policy of maintaining a drug-free workplace, any available drug counseling, rehabilitation, and employee assistance programs and penalties that may be imposed upon employees for drug abuse violations.

C. Give each employee engaged in providing the commodities or contractual services that are under bid a copy of the statement specified in subsection (1).

D. In the statement specified in subsection (1) notify employees that as a condition of working on the commodities or contractual services that are under bid, the employee will abide by the terms of the statement and will notify the employer of any conviction of, or plea of guilty or nolo-contendere to, any violation of chapter 893 or of any controlled substance law of the United States or any state, for a violation occurring in the workplace no later than five (5) days after such conviction.

E. Impose a sanction on or require the satisfactory participation in a drug abuse assistance or rehabilitation program if such is available in the employee's community, by any employee who is so convicted.

F. Make a good faith effort to continue to maintain a drug-free workplace through implementation of this section.

II. INSTRUCTIONS FOR DEBARMENT CERTIFICATION

A. By signing the Bidder's Acknowledgement Form, you are agreeing to the prospective lower tier participant is providing the certification set out herein in accordance with these instructions.

B. The certification in this clause is a material representation of fact upon which reliance was placed when this transaction was entered into. If it is later determined that the prospective lower tier participant knowingly rendered an erroneous certification, in addition to other remedies available to the Federal Government, the department of agency with which this transaction originated may pursue available remedies, including suspension and/or debarment.

C. The prospective lower tier participant shall provide immediate written notice to the person to whom this Bid is submitted if at any time the prospective lower tier participant learns that its certification was erroneous when submitted or has become erroneous by reason of changed circumstances.

D. The terms" covered transaction", "debarred", "suspended", "ineligible", "lower tier covered transaction", "participant", "person", "primary covered transaction", "principal", "Bid", "voluntarily exclude", as used in this clause, have the meanings set out in the Definitions and Coverage sections of rules implementing Executive Order 12549. You may contact the person to which this Bid is submitted for assistance in obtaining a copy of these regulations.

E. The prospective lower tier participant agrees by submitting this form that, should the proposed covered transaction be entered into, it shall not knowingly enter into any lower tier covered transaction with a person who is debarred, suspended, declared ineligible, or voluntarily excluded from participation in this covered transaction, unless authorized by the department or agency with which this transaction originated.

F. The prospective lower tier participant further agrees by submitting this form that it will include this clause titled "Certification Regarding Debarment, Suspension, Ineligibility and Voluntary Exclusion – Lower Tier Covered Transactions", without modification in all lower tier covered transactions and in all solicitations for lower tier covered transactions.

G. A participant in a covered transaction may rely upon a certification of a perspective participant in a lower tier covered transaction that it is not debarred, suspended, ineligible, or voluntarily excluded from the covered transaction, unless it knows that the certification is erroneous. A participant may decide the method and frequency by which it determines the eligibility of its principals. Each participant may, but is not required to, check the Non-Procurement List.

H. Nothing contained in the foregoing shall be construed to require establishment of a system of records in order to render in good faith the certification required by this clause. The knowledge and information of a participant is not required to exceed that which is normally possessed by a prudent person in the ordinary course of business dealings.

I. Except for transactions authorized under paragraph 5 of these instructions, if a participant in a covered transaction knowingly enters into a lower tier covered transaction with a person who is suspended, debarred, ineligible, or voluntarily excluded from participation in this transaction, in addition to other remedies available to the Federal Government, the department or agency with which this transaction may pursue available remedies, including suspension and/or debarment.

III. CERTIFICATION REGARDING DEBARMENT, SUSPENSION INELIGIBILITY AND VOLUNTARY EXCLUSION – LOWER TIER COVERED TRANSACTIONS

This certification is required by the regulations implementing Executive Order 12549, Debarment and Suspension, 7 CFR Part 3017, Section 3017.510 Participants responsibilities. The regulations were published as **Part IV of the January 30, 1989, Federal Register (pages 4722-4733).**

A. The prospective lower tier participant certifies, by submission of this Bid, that neither it nor its principals is presently debarred, suspended, proposed for debarment, declared ineligible, or voluntarily excluded from participation in this transaction by any Federal department of agency.

B. Where the prospective lower tier participant is unable to certify to any of the statements in this certification, such prospective participant shall attach an explanation to this Bid.

IV. EMERGENCY / STORM RELATED CATASTROPHE ACKNOWLEDGEMENT

Due to Acts of God, Acts of Terrorism or War, any Bidder working with the School Board shall acknowledge and agree to the following terms and conditions. This will allow the School Board to obtain Federal funding if available.

A. It is hereby made a part of this solicitation that before, during and after a public emergency, disaster, hurricane, flood or acts of God that the municipal government, through the School Board, shall require a "first priority" basis for goods and services. It is vital and imperative that the majority of citizens are protected from any emergency situation, which threatens public health and safety, as, determined by the School Board.

B. Bidder agrees to rent/sell/lease all goods and services to the School Board or other government entity as opposed to a private citizen, on a first priority basis.

C. The School Board expects to pay a fair and reasonable price for all products in the event of a disaster, emergency or hurricane.

D. Bidder shall furnish a "24-hour" phone number in the event of such an emergency.

V. NOTIFICATION REGARDING PUBLIC ENTITY CRIME AND DISCRIMINATORY VENDOR LISTS

A. Pursuant to Florida Statutory requirements, potential Bidders are notified:

287.133(2)(a)A person or affiliate who has been placed on the convicted vendor list following a conviction for a public entity crime may not submit a bid, proposal, or reply on a contract to provide any goods or services to a public entity; may not submit a bid, proposal, or reply on a contract with a public entity for the construction or repair of a public building or public work; may not submit bids, proposals, or replies on leases of real property to a public entity; may not be awarded or perform work as a contractor, supplier, subcontractor, or consultant under a contract with any public entity; and may not transact business with any public entity in excess of the threshold amount provided in s. 287.017 for CATEGORY TWO for a period of 36 months following the date of being placed on the convicted vendor list.

287.133(2)(b)A public entity may not accept any bid, proposal, or reply from, award any contract to, or transact any business in excess of the threshold amount provided in s. 287.017 for CATEGORY TWO with any person or affiliate on the convicted vendor list for a period of 36 months following the date that person or affiliate was placed on the convicted vendor list unless that person or affiliate has been removed from the list pursuant to paragraph (3)(f). A public entity that was transacting business with a person at the time of the commission of a public entity crime resulting in that person being placed on the convicted vendor list may not accept any bid, proposal, or reply from, award any contract to, or transact any business with any other person who is under the same, or substantially the same, control as the person whose name appears on the convicted vendor list so long as that person's name appears on the convicted vendor list.

287.134(2)(a)An entity or affiliate who has been placed on the discriminatory vendor list may not submit a bid, proposal, or reply on a contract to provide any goods or services to a public entity; may not submit a bid, proposal, or reply on a contract with a public entity for the construction or repair of a public building or public work; may not submit bids, proposals, or replies on leases of real property to a public entity; may not be awarded or perform work as a contractor, supplier, subcontractor, or consultant under a contract with any public entity; and may not transact business with any public entity.

287.134(2)(b)A public entity may not accept any bid, proposals, or replies from, award any contract to, or transact any business with any entity or affiliate on the discriminatory vendor list for a period of 36 months following the date that entity or affiliate was placed on the discriminatory vendor list unless that entity or affiliate has been removed from the list pursuant to paragraph (3)(f). A public entity that was transacting business with an entity at the time of the discrimination resulting in that entity being placed on the discriminatory vendor list may not accept any bid, proposal, or reply from, award any contract to, or transact any business with

any other entity who is under the same, or substantially the same, control as the entity whose name appears on the discriminatory vendor list so long as that entity's name appears on the discriminatory vendor list.

B. By submitting a Bid, the Bidder represents and warrants that the submission of its Bid does not violate Section 287.133, Florida Statutes, nor Section 287.134, Florida Statutes.

C. In addition to the foregoing, the Bidder represents and warrants that Bidder, Bidder's subcontractors, and Bidder's implementer, if any, is not under investigation for violation of such statutes.

D. Bidder should read carefully all provisions of 287.133 and 287.134, Florida Statutes.

VI. PROHIBITION AGAINST CONTRACTING WITH SCRUTINIZED COMPANIES

I hereby swear or affirm that as of the date above this company is not listed on a Scrutinized Companies list created pursuant to 215.4725, 215.473, or 287.135, Florida Statutes. Pursuant to 287.135, Florida Statutes I further affirm that:

A. This company is not participating in a boycott of Israel such that is not refusing to deal, terminating business activities, or taking other actions to limit commercial relations with Israel, or persons or entities doing business in Israel or in Israeli-controlled territories, in a discriminatory manner.

B. This Company does not appear on the Scrutinize Companies with Activities in Sudan List where the State Board of Administration has established the following criteria:

1. Have a material business relationship with the government of Sudan or a government-created project involving oil related, mineral extraction, or power generation activities, or

2. Have a material business relationship involving the supply of military equipment, or

3. Impart minimal benefit to disadvantaged citizens that are typically located in the geographic periphery of Sudan, or

4. Have been complicit in the genocidal campaign in Darfur.

C. This Company does not appear on the Scrutinize Companies with Activities in the Iran Petroleum Energy Sector List where the State Board of Administration has established the following criteria:

1. Have a material business relationship with the government of Iran or a government-created project involving oil related or mineral extraction activities, or

2. Have made material investments with the effect of significantly enhancing Iran's petroleum sector.

D. This Company is not engaged in business operations in Cuba or Syria.

E. The scrutinized company list is maintained by the State Board of Administration and available at http://www.sbafla.com/

VII. CONFLICT OF INTEREST

I HEREBY CERTIFY that

A. Except as listed below, no employee, officer, or agent of the firm have any conflicts of interest, real or apparent, due to ownership, other clients, contracts, or interests associated with this project; and,

B. The business nor any authorized representative or significant stakeholder of the business has been determined by judicial or administrative board action to be in noncompliance with or in violation of any provision/contract of the School Board, nor has any outstanding past due debt to the School Board; and

C. The School Board reserves the right to disqualify Bidders upon evidence of collusion with intent to defraud, or other illegal practices to include circumventing or manipulating the solicitation process as required by law, upon the part of the Bidder(s), the School Board's Professional Consultant(s) or any School Board employee(s) who may, or may not, be involved in developing solicitation specifications and/or firm solicitation schedules. Multiple Bids from an individual, partnership, corporation, association (formal or informal); firm under the same or different names shall not be considered. Reasonable grounds for believing that a Bidder has interest in multiple Bids for the same work shall be cause for rejection of all Bids in which such Bidder is believed to have an interest in. Any and/or all Bids shall be rejected if there is any reason to believe that collusion exists among one or more of the Bidders, the School Board's Professional Consultant(s) or School Board employees. Bidders involved in developing specification or Bidders with knowledge of the solicitation's specifications prior to the advertisement shall be disqualified from participating in the solicitation process.

EXCEPTIONS (List):

_____

_____

_____

_____

VIII. CONFIDENTIAL MATERIALS ACKNOWLEDGEMENT

DIRECTIONS: THIS ACKNOWLEDGEMENT IS REQUIRED TO BE SUBMITTED AS PART OF THE RESPONDENT'S SOLICITATION SUBMITTAL TO COVER CONFIDENTIAL MATERIALS WHICH MAY BE PROVIDED.

This Acknowledgement is valid as of the date of the submittal of a response to the solicitation. Please check one of the following options:

⊗ There **ARE NOT** Confidential Materials included as part of the Respondent's submittal to this solicitation.

○ There **ARE** Confidential Materials included as part of the Respondent's submittal to this solicitation which are detailed on Exhibit A. The following Acknowledgement terms and conditions apply:

RECITALS

WHEREAS, the Respondent possesses certain confidential trade secret materials that it wishes to disclose to the School Board for the purpose of responding to a solicitation or otherwise conducting business with the School Board; and

WHEREAS, the School Board desires to review such materials in order to evaluate the School Board's interest in negotiating and concluding an agreement for the purchase of certain products and services, or otherwise conducting business with the Respondent.

NOW THEREFORE, in consideration of the mutual promises and premises contained herein, the receipt and sufficiency of which are hereby acknowledged, the Respondent acknowledges as follows:

A. Confidential Materials. The Respondent warrants and represents to the School Board that the materials described below ("Description of Confidential Materials Submitted") constitute trade secrets as defined by Section 812.081(1)(c), Florida Statutes, or financial statements required by the School Board for projects as defined in 119.071(1)(c), Florida Statutes. Subject to the terms and conditions of this Acknowledgement, the School Board agrees not to disclose such Confidential Materials to third parties.

B. Additional Materials. During the course of the negotiations or the business relationship with the School Board, the Respondent may disclose additional confidential or trade secret information to the School Board in which case the restrictions and obligations on the use and disclosure of the Confidential Materials imposed by this Acknowledgement shall also apply to such additional information to the extent permitted by Florida law. Any such additional confidential or trade secret information shall be duly marked and stamped "confidential" or "trade secret" prior to delivery to the School Board and shall be subject to this Acknowledgement and Section 812.081(2), Florida Statutes, only if written receipt is provided by the School Board acknowledging receipt of such materials.

C. Exclusions. For purposes of this Agreement, the term "Confidential Materials" does not include the following:

    1. Information already known or independently developed by the School Board;

    2. Information in the public domain through no wrongful act of the School Board;

    3. Information received by the School Board from a third party who was legally free to disclose it;

    4. Information disclosed by the Respondent to a third party without restriction on disclosure;

    5. Information disclosed by requirement of law or judicial order, including without limitation Chapter 119, Florida Statutes; or

    6. Information that is disclosed with the prior written consent of the Respondent, but only to the extent permitted by such consent.

D. Non-Disclosure by Respondent. In the event that the School Board discloses confidential or trade secret information to the Respondent, the Respondent agrees to not disclose such information to any third party or copy such information or use it for any purpose not explicitly set forth herein without the School Board's prior written consent. Further, upon conclusion of

discussions or business transactions between the School Board and the Respondent, or at any time upon request of the School Board, Respondent agrees to return such information (including any copies) to the School Board.

E. Duty of Care. Each Party agrees to treat the other Party's confidential or trade secret information with the same degree of care, but not less than reasonable care, as the receiving Party normally takes to preserve and protect its own similar confidential information and to inform its employees of the confidential nature of the disclosing Party's information and of the requirement of nondisclosure. In the event either Party has actual knowledge of a breach of the nondisclosure requirements set forth in this Agreement, the Party acquiring such knowledge shall promptly inform the other Party and assist that Party in curing the disclosure, where possible, and preventing future disclosures.

F. Limitations of Florida Law. Respondent understands and agrees that its assertion that any item is confidential or a trade secret does not, in and of itself, render such material exempt from the Florida Public Records Law, Chapter 119, Florida Statutes, and that the School Board's ability to prevent disclosure of confidential and trade secret information may be subject to determination by a Florida court that such materials qualify for trade secret protection under Florida law. In the event a third party makes a public records request for the Confidential Materials or other materials deemed by Respondent to be confidential or a trade secret, the School Board may submit the materials to the court for inspection in camera as set forth in Section 119.07(1)(g) Florida Statutes. Respondent further understands that the School Board may be required to disclose such information if directed by a court of competent jurisdiction.

G. Indemnification by Respondent. In the event of any litigation instituted by a third party to compel the School Board to disclose such materials, Respondent shall, at its sole cost and expense, provide assistance to the School Board in defending the denial of the records request, and shall hold the School Board harmless from any claim for statutory costs and attorney's fees arising from the School Board's refusal to disclose such materials.

H. No Additional Obligations. This Acknowledgement shall not be construed in any manner to be an obligation for either Party to enter into any subsequent contract or agreement.

I. Sovereign Immunity. Nothing in this Acknowledgement shall be deemed as a waiver of immunity or limits of liability of the School Board beyond any statutory limited waiver of immunity or limits of liability, which has been or which may be adopted by the Florida Legislature, regardless of the nature of any claim which may arise, including but not limited to a claim sounding in tort, equity or contract. In no event shall the School Board be liable for any claim or claims for breach of contract, including without limitation the wrongful disclosure of confidential or trade secret information for an amount which exceeds, individually and collectively, the then current statutory limits of liability for tort claims. Nothing in this Acknowledgement shall inure to the benefit of any third party for the purpose of allowing any claim against the School Board, which would otherwise be barred under the Doctrine of Sovereign Immunity or by operation of law.

J. Notice. Whenever either Party desires to give notice unto the other, it must be given by written notice, sent by registered United States mail, with return receipt requested, addressed to the party for whom it is intended, at the place last specified, and the place for giving of notice in compliance with the provisions of this paragraph. For the present, the Respondent designates the address set forth above as its place for receiving notice, and the School Board designates the following address for such notice:

The School Board of Brevard County, Florida
Procurement & Distribution Services, Pod 8, Room 802
2700 Judge Fran Jamieson Way
Viera, FL 32940-6601

K. Governing Law. This Acknowledgement shall be governed by the laws of the State of Florida, and venue for any action arising out of or relating to the subject matter of this Acknowledgement shall be exclusively in Brevard County, Florida, or the Federal District Court for the Middle District of Florida, Orlando Division.

L. Respondent and the School Board hereby expressly waive any rights either may have to a trial by jury of any civil litigation related to this Acknowledgement for any litigation limited solely to the parties of this Acknowledgement.

DESCRIPTION OF CONFIDENTIAL MATERIAL SUBMITTED

_____

_____

_____

_____

_____

_____

_____

_____

_____

_____

_____

_____

_____

_____

_____

_____

_____

_____

Bidder Name : International Restaurant Distributors, Inc.

ITEM NO.	BRAND	DISCOUNT		ITEM NO.	BRAND	DISCOUNT
1.	ABC Controls	N/A		27.	Hatco	45
2.	Accutemp	54.5		28.	Hobart	31.5
3.	Advance Tabco	55		29.	ICS	N/A
4.	Alto Shaam	32		30.	Insinkerator	44.5
5.	American Panel	10		31.	Kolpak	50.1
6.	Angelo Po	36		32.	Lakeside	47
7.	Bally	54		33.	Manitowoc	61.5
8.	Berner	50		34.	Market Forge	45
9.	Beverage Aire	67		35.	Masterbilt	48
10.	BioZone	N/A		36.	Metro	45
11.	Blodgett	60.1		37.	Multiteria	N/A
12.	Cambro	52.5		38.	Norlake	54
13.	Cleveland	60		39.	Pitco	51.5
14.	Colorpoint/Low Temp	N/A		40.	Randell	52
15.	Continental	55.5		41.	Salvajor	50
16.	Cooktek	40		42.	Structural Concepts	50
17.	Cres Cor	50		43.	Thermo Compaction	N/A
18.	Delfield	56		44.	Thermo Kool	50
19.	Denver Equipment	N/A		45.	Tournus Equipment	N/A
20.	Duke	55.5		46.	Traulsen	55
21.	E Control Systems	N/A		47.	True	67
22.	Follett	45		48.	Utility	N/A
23.	Galley	48		49.	Vollrath	51
24.	Garland	56.4		50.	Vulcan	60
25.	Globe	54		51.	Winston	53.5
26.	Groen	52				

INTERNATIONAL RESTAURANT DISTRIBUTORS, INC.

LIST OF THREE REFERENCES

#1 Agency	Lake County Schools
Address	201 West Burleigh Blvd.
City, State, ZIP	Tavares, FL 32778
Contact Person	Linda Milliken
Telephone/ Fax	352-253-6800
Email	millikenl@lake.k12.fl.us
Date(s) of Service	2006-Present
Type of Service	Replacement Kitchen Equipment and Supplies
Comments:	
#2 Agency	Marion County Schools
Address	512 SE 3rd Street
City, State, ZIP	Ocala, FL 34471
Contact Person	Marie Akins
Telephone/ Fax	352-671-4195 x51795
Email	marie.akins@marion.k12.fl.us
Date(s) of Service	2009-Present
Type of Service	Replacement Kitchen Equipment and Supplies
Comments:	
#3 Agency	Alachua County Schools
Address	620 E. University Avenue
City, State, ZIP	Gainesville, FL 32601
Contact Person	Maria Eunice
Telephone/ Fax	352-955-7539
Email	eunicemd@gm.sbac.edu
Date(s) of Service	2007-Present
Type of Service	Replacement Kitchen Equipment and Supplies
Comments:	

Brevard Public Schools

THE SCHOOL BOARD OF BREVARD COUNTY, FLORIDA

PROCUREMENT & DISTRIBUTION SERVICES
2700 Judge Fran Jamieson Way
Viera, FL 32940

INVITATION TO BID

SCOPE OF WORK AND SPECIAL TERMS & CONDITIONS

ITB-21-388-B-MC Large Cafeteria Equipment

ALL BIDS DUE BY: April 27, 2021 2:00 P.M. EDT

NOTE: BIDS RECEIVED AFTER THE DUE DATE AND TIME WILL NOT BE ACCEPTED.

PRE-BID MEETING: N/A

PROCUREMENT CONTACT: Michelle Cherry, Buyer II
Phone: 321-633-1000 ext. 11630 Email: cherry.cynthia@brevardschools.org

PURPOSE

The purpose of this Invitation to Bid (ITB) is to solicit competitive sealed Bids and to establish firm fixed percentage discount(s) for the purchase and delivery of Large Cafeteria Equipment for the needs of, Food and Nutrition Services. The Food Service equipment is purchased for replacement at existing schools on an as-needed basis. Discounts to include freight and delivery costs.

1.0 SCOPE

1.01 This Specification establishes the minimum requirements for this solicitation, listed and described in the body of these specifications, to be used as noted, by The School Board of Brevard County.

1.02 AWARD TERM

The School Board's goal is to promote partnership relationships within the policies and procedures of public procurement. Pursuant toward that end, the awarded Bidder(s) shall be awarded a contract for an initial three (3) year term with an optional one (1) two (2) year renewal period.

The award term recommendation will be that which is determined to be in the best interest of the School Board. The renewal option shall be exercised only if all original contract terms, conditions, and prices remain the same. All renewals will be contingent upon mutual written agreement and, when applicable, approval of School Board.

1.03 AWARD

In order to meet the need of the schools and departments and in the best interest of Brevard Public Schools, awards will be made to all Bidders who offer fixed percentage discount(s), submit catalogs(s) and otherwise comply with all specifications, terms and conditions of this bid.

1.04 BRANDS

Due to standardizing large cafeteria equipment, consideration will only be given to the manufacturers specified on the price sheet.

1.05 CODES AND STANDARDS

All items bid must be registered with and meet National Sanitation Foundation (NSF) standards. Where applicable, provide Underwriters Laboratories (UL) labels on prime electrical components of food service equipment. Comply with American Gas Association (AGA), Canadian Gas Association (CGA), and American Society of Mechanical Engineering (ASME) and with applicable American National Standards Institute (ANSI) standards for electric powered and gas- burning appliances.

1.06 ELECTRICAL REQUIREMENTS

Purchase order(s) shall state electrical characteristics of each piece of equipment ordered if not stated in the specifications. It is the responsibility of the awarded Bidder to verify these characteristics before shipment of equipment. All electrical operated equipment shall be complete with cord, wired complete to junction box with the fixture ready for connection to the building. All receptacles are to be grounding type listed by the Underwriter's laboratory and approved for use by National Electric Code.

1.07 DELIVERY & SET IN PLACE

All large cafeteria equipment shall be inside delivery. School Board personnel will not be available to help with the unloading or moving of the equipment/modules. It is the responsibility of the awarded Bidder to unload, uncrate and set in place. The equipment/modules will be leveled, aligned and made ready to connect to utilities. Placement shall be made in the individual school kitchens to the satisfaction of the Director of Food and Nutrition Services. Delivery and Set in Place for all equipment/modules must be included in the fixed percentage discount. Awarded Bidders are responsible for removing all packing material from the site. It is preferred that the Bidder include Factory Installation when submitting pricing for equipment to the District. Pricing will also be requested for disconnecting the old equipment and moving it to a designated area at the site.

1.08 SET-UP/INSPECTION OF EQUIPMENT

The Bidder/manufacturer's representative shall inspect the equipment/modules for any damage, missing parts and/or factory errors and correct any problems that are found. Upon completion of installation, the equipment/modules will be calibrated, checked, tested and started to ensure proper performance. If necessary, the awarded Bidder shall provide training to Food and Nutrition personnel for each piece of equipment. Training content and schedule must be reviewed and approved by the Director of Food and Nutrition Services.

1.09 WARRANTY

A written warranty for large cafeteria equipment shall be provided covering the replacement and repair, within the warranty period, of compressors with inadequate and/or defective workmanship and materials. This shall include leakage, breakage, improper assembly or failure to perform as required, provided manufacturer's instructions for handling, installing, protecting and maintaining units have been adhered to during warranty period. Manufacturer's standard warranty shall apply from date of delivery. Unless otherwise stated, warranty shall be for a minimum of one full year and will include parts, labor, and travel for technicians. Warranty for compressor parts shall be for a minimum of five full years.

1.10 SERVICE MANUAL/PARTS LIST/USE AND CARE GUIDE

Awarded Bidder (s) shall furnish three (3) copies of the Use and Care Manual and Installation Guide and three (3) copies of the Trouble- Shooting Guide, Parts List and Spare Parts List with the first unit purchased and one (1) additional copy of the Use and Care Guide with each additional unit, to be delivered to the Director of Food and Nutrition Services, 2700 Judge Fran Jamieson Way, Viera, Florida, 32940, within thirty (30) days after delivery of each unit.

1.11 BILLING

Two (2) copies of the Bidder's invoice shall be mailed to Food and Nutrition Services, 2700 Judge Fran Jamieson Way, Viera, Florida, 32940

1.12 ACCESS TO RECORDS

All contracts over $10,000 awarded by the School Board, must include a provision to the effect that the School Food Authority, the State Agency, USDA, the Comptroller General of the United States, or any of their duly authorized representatives, shall have access to any documents books, papers, and records of the Bidder which are directly pertinent to that specific contract, for the purpose of making audit, examination, excerpts, and transcriptions.

1.13 CATALOG BID

1.13.1 ELECTRONIC CATALOGS

The School Board prefers to use a web-based version of catalogs; however, prices must be configured with the discount already taken. Online ordering may use the School Board's Purchasing Card Program.

1.13.2 NEW ITEMS

New items appearing in the awarded Bidder's catalog released after the bid opening date are to be covered by this bid as if these items were originally included in the catalog(s) submitted with the bid.

1.13.3 TRAINING

The awarded Bidder(s) must be willing to offer training and support for schools and departments as needed. Training may include but not be limited to company introduction, setting up new users for online ordering, and review of catalog bid discounts.

1.14 DISCOUNT ADJUSTMENTS

Unless a change is deemed to be in the best interest of the School Board, there will be no discount adjustments allowed during the contract period. The discounts submitted on the Price Sheet shall remain firm throughout the contract period. Bidders are encouraged to consider this requirement when offering discounts.

1.15 NEW ITEMS AND/OR OPTIONS

New items and/or options may be included in this bid if they are standard items and/or options for this commodity. Items inadvertently left off the price sheet may be viewed as an option not known

No guarantee is given or implied as to the total quantity or dollar value of this bid. The School Board is not obligated to place any order with any awarded Bidder participating in this bid. All schools and departments, however, will be urged to refer to catalogs and discounts of participating Bidders in their attempt to fill their requirements at the lowest net prices.

1.25 METHOD OF ORDERING
Items shall be ordered via individual purchase orders or by Visa purchasing card on an "as needed" basis for the term of the contract. Invoices must be submitted against each individual purchase order.

1.26 ORDERS
Schools, departments and centers of the School Board will issue purchase orders or place order by Visa purchasing card directly to the awarded Bidder(s) for the purchase of Large Cafeteria Equipment. The awarded Bidder(s) will be expected to honor these orders according to the discount terms and conditions listed in this solicitation. Each purchase order will be emailed or mailed to the awarded Bidder(s). The order should be reviewed for correct prices, catalog numbers, extensions, etc.

1.27 EXEMPT FROM THIS BID
Purchases shall not include items available at lower prices on other School Board bid awards or on Florida State Contracts. Items shall be ordered via individual purchase orders or Visa purchasing card on an "as needed" basis for the term of the contract. Invoices must be submitted against each individual purchase order or receipts must be submitted for each purchase on Visa purchasing card.

1.28 SUBSTITUTES
Unapproved substitutes will not be allowed. If items are not available, the school or department noted on the purchase order must be contacted prior to shipment to determine if a substitute is acceptable.

1.29 STANDARDIZATION OF ITEMS- N/A

1.30 LIQUIDATED DAMAGES- N/A

1.31 NO DAMAGES FOR DELAY
Bidder is not entitled to any additional compensation or increase in the contract sum for direct, indirect, impact, or any other damages arising because of any hindrance or delays caused by the owner or any other cause whatsoever. Bidder's only remedy for delay, not caused or exacerbated by the Bidder, shall be an extension of time to complete the Bidder's scope of work. Any extension of time shall be granted at the sole discretion of the School Board, and if granted, shall be in the form of additional days added to the contract.

1.32 TIME FOR COMPLETION OR DELIVERY- N/A

1.33 BARRICADES
The Bidder shall provide all barricades and take all necessary precautions to protect building and personnel. All work shall be complete in every respect and accomplished in a workmanlike manner and Bidder shall provide for removal of all debris from the School Board.

1.34 PALLETIZE- N/A

1.35 MEASUREMENTS- N/A

2.0 SPECIAL TERMS & CONDITIONS

2.01 CLOSING DATE
Submittals must be received by The School Board of Brevard County, Florida, Office of Procurement & Distribution Services through VendorLink at https://www.myvendorlink.com no later than **2:00 p.m., local time, on April 27, 2021.** Bids received after this time will not be considered.

2.02 TENTATIVE SCHEDULE

March 25, 2021 ..... Invitation to Bid Available
April 15, 2021 ..... Deadline for Questions
April 27, 2021 ..... Bid Closing Date
May 25, 2021 ..... Planned Award Date

2.03 ELECTRONIC BID SUBMITTAL

Bidder shall submit all documents listed in **Section 3.0 – Submittal Requirements** electronically through VendorLink at https://www.myvendorlink.com. Contact VendorLink technical support at support@evendorlink.com if technical difficulties arise during submission.

A. Upload files only in Excel (.xls or .xlsx), Adobe Portable Document Format (.pdf), or .ZIP file formats.

B. Enable printing on all files submitted.

C. All required documents must be fully filled out and signed by an official who is authorized to legally bind the Bidder on all solicitation specifications.

D. Clearly identify each part of the submission.

E. Terms and conditions submitted by Bidder which differ from those in this solicitation shall be cause for disqualification of the Bid Submittal.

2.04 PRE-BID CONFERENCE/WALK THROUGH – N/A

2.05 PUBLIC BID OPENING

A. The Bids will not be available for public records request until a notice of intended decision is issues or thirty (30) days after bid opening date, whichever is earlier. (Florida Statute 119.071 (1) (b)).

B. The Bidder List will be available at https://www.myvendorlink.com at time of Bid opening.

C. Individuals covered by the Americans with Disabilities Act of 1990 in need of accommodations to access the public Bidder List at https://www.myvendorlink.com should contact the Procurement Department at 321-633-1000 x11645 after the Bid opening date.

D. Individuals that would like to hear the names of Bidders read aloud during the official Bid opening may access the electronic meeting via Microsoft Teams at the following web address: Click here to join the meeting

2.06 QUESTIONS CONCERNING BID

A. Questions concerning any portion of this Solicitation shall be directed in writing or by e-mail to the Procurement Representative named below, who shall be the official point of contact for this Solicitation. Questions should be submitted by the question deadline date as listed above in Section 2.02, Tentative Schedule.

B. Email should include **"Questions regarding Bid # ITB 21-388-B-MC Large Cafeteria Equipment"** in the subject line.

C. Submit questions to:
Michelle Cherry, Buyer II
E-mail: cherry.cynthia@brevardschools.org

2.07 CLARIFICATION AND ADDENDA

A. It is incumbent upon each Bidder to carefully examine all specifications, terms, and conditions contained herein. Any inquiries, suggestions, or requests concerning interpretation, clarification or additional information shall be made in writing, (facsimile transmissions are acceptable, 321-877-0904) through the Procurement Representative named above. The School Board will not be responsible for any oral representation(s) given by any employee, representative or others. The issuance of a written addendum is the only official method by which interpretation, clarification or additional information can be given.

B. If it becomes necessary to revise or amend any part of this Solicitation, notice will be sent via VendorLink. **Each Bidder should ensure that all addenda and amendments to this Solicitation have been received and signed to be included with Bid submittal. Check https://www.myvendorlink.com/ for any addenda. The Procurement Department will not manually distribute any addenda.**

2.08 FLORIDA DEPARTMENT OF STATE, DIVISION OF CORPORATIONS REGISTRATION REQUIREMENTS

Bidders who are required to be registered with the Florida Department of State, Division of Corporations or who are incorporated within the State of Florida must furnish their Florida document number, and a screen shot of their "active" status. All registered Bidders must have an active status in order to be eligible to do business with the School Board. Bidders doing business under a fictitious name, on page 1, must submit their bid using the company's complete registered legal name; example: ABC, Inc. d/b/a XYZ Company. To register with the State of Florida, visit: www.Sunbiz.org

2.09 AWARD

The School Board reserves the right to award the solicitation to the Bidder(s) that the School Board deems to offer the lowest responsive and responsible bid(s), as defined elsewhere in this solicitation. The School Board is therefore not bound to accept a bid on the basis of lowest price. In addition, the School Board has the sole discretion and reserves the right to cancel this solicitation, to reject any and all bids, to waive any and all informalities and/or irregularities, or to re-advertise with either the identical or revised specifications, if it is deemed to be in the best interest of the School Board to do so. The School Board also reserves the right to make multiple awards based on experience and qualifications or to award only a portion of the items and/or services specified, if it is deemed to be in the School Board's best interest.

2.10 DEFINITION OF RESPONSIVE AND RESPONSIBLE FOR THIS BID

Each bid submittal shall be evaluated for conformance as responsive and responsible using the following criteria:

A. Proper submittal of ALL documentation as required by this solicitation (Responsive)

B. The greatest benefits to the School Board as it pertains to: (Responsible)
   1. Total Cost.
   2. Delivery.
   3. Past Performance. In order to evaluate past performance, all Bidders are required to submit:
      a. A list of references with the bid and;
      b. A list of relevant projects completed within the last three (3) years that are the same or similar to the magnitude of this ITB.
   4. All technical specifications associated with this solicitation.

Bidders are reminded that award may not necessarily be made to the lowest bid. Rather, award will be made to the lowest responsive, responsible, Bidder whose bid represents the best overall value to the School Board when considering all evaluation factors.

2.11 OTHER AGENCIES

A. In accordance with State Board Rule 6A-1.012 (6), all Bidders awarded contracts from this solicitation may, upon mutual agreement with the other agency, permit any school board,

municipality or other governmental agency, to include Public Charter Schools, to participate in the contract under the same prices, terms and conditions, if agreed to by both parties.

B. Further, it is understood that each school board or agency will issue its own purchase order to the awarded Bidder(s).

2.12 CONTRACT

A. The contents of this solicitation and all provisions of the Bidder's Acknowledgement Form shall be considered a contract and become legally binding. A separate contract document, other than the purchase order(s), will not be issued.

B. The Director of Procurement & Distribution Services, Superintendent, and Board Chair are the sole Contracting Officers for the School Board, and only they or their designee are authorized to make changes to any contract.

C. The School Board shall be responsible for only those orders placed by the schools/departments on an authorized signed purchase order or Visa purchasing card. The School Board shall not be responsible for any order, change substitution or any other discrepancy on the purchase order or card charges. If there is any question about the authenticity of a purchase order, card charge or change order, the Bidder should promptly contact the Procurement Department.

D. The School Board hereby notifies interested parties that the purchasing agreements and state term contracts, available under s. 287.056, of the Department of Management Services will be reviewed for the subject of the award recommendation of this solicitation.

2.13 DISCLOSURE OF BID CONTENT

A. All material submitted becomes the property of the School Board and may be returned only at the School Board's option. The School Board has the right to use any or all ideas presented in any reply to this solicitation. Selection or rejection of any Bid Submittal does not affect this right.

B. The School Board is governed by the Public Record Laws, Chapter 119, Florida Statutes (F.S.). Only trade secrets as defined in Section 812.081(1)(c), F.S. or financial statements required by the School Board as defined in 119.071(1)(c), F.S. (hereinafter "Confidential Materials"), may be exempt from disclosure. If a Bidder submits Confidential Materials, the information **MUST BE** listed on Page 10 of the Standard Terms and Conditions and each pertinent page must be clearly labeled "confidential" or "trade secret." The School Board will not disclose such Confidential Materials, subject to the conditions detailed within the Confidential Materials Acknowledgement.

PLEASE READ THE SECTION IN THE BID DOCUMENT TO DETERMINE IF THIS APPLIES.

2.14 BIDDER'S RESPONSIBILITY

The Bidder, by submitting a Bid represents that:

A. The Bidder has read and understands the Solicitation in its entirety and that the solicitation is made in accordance therewith, and;

B. The Bidder possesses the capabilities, resources, and personnel necessary to provide efficient and successful service to the School Board, and;

C. Before submitting a Bid, each Bidder shall make all investigations and examinations necessary to ascertain site and/or local conditions and requirements affecting the full performance of the contract and to verify any representations made by the School Board, upon which the Bidder will rely. If the Bidder receives an award because of its Bid Submittal, failure to have made such investigations and examinations will in no way relieve the Bidder from its obligations to comply in every detail with all provisions and requirements

of the contract, nor will a plea of ignorance of such conditions and requirements be accepted as a basis for any claim by the Bidder for additional compensation or relief.

D. The Bidder will be held responsible for any and all discrepancies, errors, etc., in discounts or rebates which are discovered during the contract term or up to and including five (5) fiscal years following the School Board's annual audit including five (5) years thereafter.

2.15 PAYMENT TERMS

A. **INVOICING**

The awarded Bidder will be required to submit invoices and reference purchase order numbers on all requests for payment. All statements must reference valid School Board purchase order numbers. Invoices shall be mailed directly to the "bill to" as listed on the purchase order. A separate invoice must be received for each purchase order number. Payment for partial shipments shall not be made unless specified in the terms of this solicitation or a School Board purchase order. Invoices, which do not reference valid School Board purchase order numbers or which are erroneous (incorrect contract prices, minimum order charges, etc.) shall be returned to the Bidder for resolution of the discrepancies. It is the sole responsibility of the Bidder to reconcile the purchase order and the Bidder's invoice and to notify the Procurement representative of any discrepancies prior to billing. The School Board will only pay the dollar amounts authorized on the purchase order.

B. The Bidder represents and agrees that information submitted in support of its requests for payment is the basis of payment and is true and accurate to the best knowledge of the responsible signatory. A violation of this provision shall subject the violator to the provisions of Section 68.082, Florida Statutes, pertaining to false claims against the State, and/or Section 837.06, Florida Statutes, pertaining to false official statements.

C. The School Board will remit full payment on all undisputed invoices within 45 (forty-five) days from receipt by the appropriate person(s) (to be designated at time of contract) of the invoice(s) or receipt of all products or services ordered.

D. Pursuant to Chapter 218, Florida Statutes, the School Board will pay interest, not to exceed one percent (1%) per month, on all undisputed invoices not paid within 45 (forty-five) days after receipt of the entire order of the commodity or service, AND a properly completed invoice, whichever is later.

E. The School Board has the capabilities of Electronic Fund Transfer (EFT). List any additional discounts for payment using Electronic Funds Transfer (EFT) and/or any additional discounts to be applied to such payments.

F. ***By submitting a Bid (offer) to the School Board, the Bidder expressly agrees that if awarded a contract, the School Board may withhold from any payment, monies owed by the Bidder to the School Board for any legal obligation between the Bidder and the School Board.***

G. **PARTIAL PAYMENT**

Partial payments in the full amount of the value of items received and accepted may be requested by the submission of a properly executed invoice with support documents if required.

H. **PAYMENT DISCOUNTS**

A bid price submitted indicating a discount if an invoice is paid within a certain number of days from the date of the invoice cannot be considered as a basis for the solicitation evaluation. All bid prices must be net and not contingent on terms.

2.16 LICENSES AND CERTIFICATES

A. The School Board reserves the right to require proof that the Bidder is an established business and is abiding by the ordinances, regulation, and the laws the State of Florida,

such as but not limited to: Business Tax Receipts, business licenses, Florida sales tax registration, Federal Employers Identification Number, AND;

B. Each firm and personnel who will be performing services on behalf of the Bidder for the School Board are to be properly licensed to do business in its area of expertise in the State of Florida. Each Bidder shall submit with their Bid a copy of and maintain the appropriate licenses and certificates during the term of the contract and any extensions. Failure to maintain these requirements shall be cause for immediate termination of the contract.

2.17 INSURANCE REQUIREMENTS

The Bidder will provide before commencement of work, and attach to this agreement, a certificate(s) evidencing such insurance coverage to the extent listed in 2.17.1 to 2.17.5 below. The following applies to the insurance requirements below for products or services from contractors when all products, services, or work performed when totaled together will pay the contractor $50,000 or more during the fiscal year. The insurance requirements are as follows:

1. Insurance listed in 2.17.1 below is required of all contractors and Contractors: The School Board shall be named as an additional insured to the insurance policy. If the School Board is not named as an additional insured, then the School Board reserves the right terminate this agreement.

2. Insurance listed in 2.17.2 below: All contractors whose work for the School Board includes products or services, and the value of these products or services are in excess of $25,000 are required to carry this insurance to the limit listed below.

3. Insurance listed in 2.17.3 below: Any contractor transporting School Board employees, delivering or transporting School Board owned equipment or property, or providing services or equipment where a reasonable person would believe the School Board is responsible for the work of the contractor from portal to portal is required to carry this insurance to the limit listed below.

4. Insurance as listed in 2.17.4 below: All contractors that have one or more employees or subcontracts any portion of their work to another individual or company is required to have workers' compensation insurance to the limits listed below. For contracts of $50,000 or more, no State of Florida, Division of Workers' Compensation, Exemption forms will be accepted. All entities and individuals are required to purchase a commercial workers' compensation insurance policy.

5. Insurance as listed in 2.17.5 below: All contractors providing professional services such as architects, engineers, attorneys, auditors, accountants, etc. are required to have this insurance to the limits listed below.

All contractors will carry and maintain policies as described in numbers 1 to 5 above and as checked off in the box to the left of each section 2.17.1 to 2.17.5 below as specifically marked by representatives of the Office of Procurement Services. All required insurance required must be from insurance carriers that have a rating of "A" or better and a financial size category of "VII" or higher according to the A. M. Best Company. Such certificates must contain a provision for notification to the School Board thirty (30) days in advance of any material change in coverage or cancellation. This is applicable to the procurement and delivery of products, goods, or services furnished to the School Board.

☒ 2.17.1. Commercial General Liability Insurance:

Negligence including Bodily Injury and Property Damage	
Per Occurrence -	$1,000,000
General Aggregate -	$2,000,000

☒ 2.17.2. Product Liability and/or Completed Operations Insurance:

Negligence including Bodily Injury and property damage -	$1,000,000
Products – Completed Operations Aggregate -	$2,000,000

☒ 2.17.3. Automobile Liability:
Negligence Including Bodily Injury and Property Damage:

Per Claim -	$ 500,000
Combined Single Limit (each accident) -	$1,000,000

☒ 2.17.4. Workers' Compensation/Employer's Liability:

W.C. Limit Required* -	Statutory Limits
E.L. Each Accident -	$ 100,000
E.L. Disease – Each Employee	$ 100,000
E.L. Disease – Policy Limit	$ 500,000

☐ 2.17.5. Professional Liability Insurance (Errors and Omissions):
For services, goods or projects that will exceed $1,000,000 in values over a year.

Each Claim -	$1,000,000
Annual Aggregate -	$2,000,000

For services, goods or projects that will not exceed $1,000,000 in values over a year.

Each Claim -	$ 250,000
Annual Aggregate -	$ 500,000

Professional Liability coverage must be maintained for a two-year period following completion of the contract.

2.18 DAMAGES TO RENTAL EQUIPMENT

Rental Bidders agree to purchase such insurance, as they consider necessary to protect their equipment from damage or destruction during the term of this contract for rental of equipment. Rental Bidders also agree that the School Board shall have no obligation for payment of damages of any nature to equipment provided with or without an operator unless clear and convincing evidence demonstrates that gross negligence of either the School Board or its employees acting within the scope of their employment was the direct cause of such damage or destruction.

Rental Bidders further understand and agree that no employee of the School Board other than the Superintendent or School Board Chairman is authorized to sign any rental or other agreement that contains terms and conditions other than those contained in this solicitation, and that any signature of a School Board employee other than the Superintendent or School Board Chairman shall be interpreted as the School Board's acknowledgement of delivery only.

2.19 SAFETY

The Bidder shall take the necessary precautions and bear the sole responsibility for the safety of the methods employed in performing the work. The Bidder shall at all times comply with the regulations set forth by federal, state, and local laws, rules, and regulations concerning "OSHA" and all applicable state labor laws, regulations, and standards. Bidder shall take all necessary precautions to ensure all materials provided do not include Asbestos. The Bidder shall indemnify and hold harmless the School Board from and against all liabilities, suits, damages, costs, and expenses (including attorney's fees and court costs) which may be imposed on the School Board because of the Bidder, sub-contractor, or supplier's failure to comply with the regulations.

2.20 WAGE PRICE REDETERMINATION- N/A

2.21 PRICE REDETERMINATION – FUEL- N/A

2.22 PRICE REDETERMINATION- N/A

2.23 DEVIATIONS

All Bid Submittals must clearly and with specific detail, note all deviations to the exact requirements imposed upon the Bidder by the specifications. Such deviations must be stated upon the Bid Submittal Form; otherwise the School Board will consider the subject Bid Submittal as being made in strict compliance with said specifications to Bidders, the Bidder being held therefore accountable

and responsible. Bidders are hereby advised that School Board will only consider Bid Submittals that meet the exact requirements imposed by the specifications; except, however, said Bid Submittals may not be subject to such rejection where, **at the sole discretion of The School Board**, the stated deviation is considered to be equal or better than the imposed requirement and where said deviation does not destroy the competitive character of the solicitation process by affecting the amount of the Bid Submittal such that an advantage or benefit is gained to the detriment of the other Bidders.

2.24 MATERIAL SAFETY DATA SHEET

In accordance with Chapter 487 of the Florida Statutes, it is the Bidder's responsibility to identify and to provide to the Office of Procurement & Distribution Services and the Office of Environmental Health and Safety a Material Safety Data Sheet for any material, as may apply to this procurement.

2.25 WAIVER OF CLAIMS

Once this contract expires, or final payment has been requested and made, the awarded Bidder shall have no more than thirty (30) calendar days to present or fi e any claims against the School Board concerning this contract. After that period, the School Board will consider the Bidder to have waived any right to claims against the School Board concerning this agreement.

2.26 TERMINATION / CANCELLATION OF CONTRACT

The School Board reserves the right to cancel the contract without cause with a minimum thirty (30) days' written notice.

Termination or cancellation of the contract will not relieve the Bidder of any obligations for any deliverables entered into prior to the termination of the contract (i.e., reports, statements of accounts, etc., required and not received).

Termination or cancellation of the contract will not relieve the Bidder of any obligations or liabilities resulting from any acts committed by the Bidder prior to the termination of the contract.

The Bidder may cancel the resulting contract with **one hundred twenty (120) days' written** notice to the Director of Procurement & Distribution Services. Failure to provide proper notice may result in the Bidder being barred from future business with the School Board.

2.27 TERMINATION FOR SCHOOL BOARD'S CONVENIENCE

The performance of work under this contract may be terminated in accordance with this clause in whole, or from the time in part, whenever the School Board representative shall determine that such termination is in the best interest of the School Board. Any such termination shall be affected by the delivery to the Bidder of a Notice of Termination specifying the extent to which performance of work under the contract is terminated, and the date upon which such termination becomes effective. Upon such termination for convenience, Bidder shall be entitled to payment, in accordance with the payment provisions, for services rendered up to the termination date and the School Board shall have no other obligations to Bidder. Bidder shall be obligated to continue performance of contract services, in accordance with this contract, until the termination date and shall have no further obligation to perform services after the termination date.

2.28 TERMINATION FOR DEFAULT

The School Board's representative shall notify, in writing, the Bidder of deficiencies or default in the performance of its duties under the Contract. Three (3) separate documented instances of deficiency or failure to perform in accordance with the specifications contained herein shall constitute cause for termination for default, unless specifically specified to the contrary elsewhere within this solicitation. It shall be at the School Board's discretion whether to exercise the right to terminate. Bidder shall not be found in default for events arising due to acts of God. **Termination for cause includes terminations under 287.135, F.S.**

2.29 BIDDER PERFORMANCE

BPS project personnel shall monitor Bidder's performance. A 'Report of Unsatisfactory Product or Service' form (attached) shall be utilized to document unsatisfactory performance during the term of this contract. The report may become an important part of the Bidder's history. The report and

process will assist the Office of Procurement & Distribution Services to determine whether there is a continuing pattern of problems which may need to be addressed through termination of contract and/or suspension of Bidder from future bidding.

2.30 COLLUSION

The School Board of Brevard County reserves the right to disqualify bids upon evidence of collusion with intent to defraud, or other illegal practices to include circumventing or manipulating the solicitation process in a manner that conflicts with applicable law, upon the part of the Bidder(s), Bidder's employees or agents , the School Board's Professional Consultant(s), or Consultant's agents, or any School Board employee(s) who may, or may not, be involved in the development of bid specifications and/or firm bid schedules. Multiple bids from an individual, partnership, corporation, association (formal or informal) or firm under the same or different names shall not be considered. Reasonable grounds for believing that a Bidder has interest in multiple Bids for the same work shall be cause for rejection of all Bids in which such Bidder is believed to have an interest in. Any and/or all Bids shall be rejected if there is any reason to believe that collusion exists among one or more of the Bidders, the School Board's Professional Consultant(s) or School Board employees. Bidders involved in developing a solicitation specification or Bidders with knowledge of solicitation specifications prior to a solicitation advertisement shall be disqualified from participating in the applicable solicitation process.

2.31 INCURRED EXPENSES

This ITB does not commit the School Board to award a contract, nor shall the School Board be responsible for any cost or expense which may be incurred by the Bidder in preparing and submitting the bid called for in this ITB, or any cost or expense incurred by the Bidder prior to the execution of a contract agreement.

2.32 MINIMUM SPECIFICATIONS

The specifications listed herein are the minimum required specifications for this ITB. They are not intended to limit competition nor specify any particular Bidder, but to ensure that the School Board receives quality products and services.

2.33 COMPLIANCE WITH LAWS AND REGULATIONS

The Bidder shall be responsible to know and to apply all applicable federal and state laws, all local laws, ordinances, rules, regulations, and all orders and decrees of bodies or tribunals having jurisdiction or authority which in any manner affect the work, or which in any way affect the conduct of the work. Bidder shall always observe and comply with all such laws, ordinances, rules, regulations, orders, and decrees. The Bidder shall protect and indemnify School Board and all its officers, agents, servants, or employees against any claim or liability arising from or based on the violation of any such law, ordinance, rule, regulation, order, or decree caused or committed by Bidder, its representatives, sub-contractors, sub-consultants, professional associates, agents, servants, or employees. Additionally, Bidder shall obtain and maintain at its own expense all licenses and permits to conduct business pursuant to this contract from the federal government, State of Florida, Brevard County, or municipalities when legally required, and maintain same in full force and effect during the term of the contract.

2.34 BIDDER'S PUBLIC RECORDS

Public Records Act/Chapter 119 Bidder agrees to comply with the Florida Public Records Act (Chapter 119, Florida Statutes) to the fullest extent applicable, and shall, if this engagement is one for which services are provided, by doing the following:

A. Bidder and its subcontractors shall keep and maintain public records required by the SBBC to perform the service.

B. Effective July 1, 2016, Bidder and its subcontractors shall upon request from the SBBS's custodian of public records, provide the SBBC with a copy of the requested records or allow the records to be inspected or copied within a reasonable time at a cost that does not exceed that provided in chapter 119, Florida Statutes or as otherwise provided by law;

C. Bidder and its subcontractors shall ensure that public records that are exempt or that are

confidential and exempt from the public records disclosure requirements are not disclosed except as authorized by law for the duration of the contract term and following completion of the contract if the Bidder does not transfer the records to the SBBC; and

D. Bidder and its subcontractors upon completion of e contract shall transfer to the SBBC, at no cost, all public records in possession of the Bidder and its subcontractors or keep and maintain the public records required by the SBBC to perform the service. If the Bidder and its subcontractors transfer all public records to the SBBC upon completion of the contract, the Bidder and its subcontractors shall destroy any duplicate public records that are exempt or that are confidential and exempt from the public records disclosure requirements. If the Bidder and its subcontractors keep and maintain public records, upon completion of the contract, the Bidder and its subcontractors shall meet all applicable requirements for retaining public records. All records stored electronically must be provided to the SBBC, upon request from the SBBC's custodian of public records, in a format that is compatible with the information technology systems of the SBBC.

E. The parties agree that if the Bidder and its subcontractors fail to comply with a public records request, then the SBBC must enforce the Agreement provisions in accordance with the Agreement and as required by Section 119.0701, Florida Statutes.

F. IF THE BIDDER HAS QUESTIONS REGARDING THE APPLICATION OF CHAPTER 119, FLORIDA STATUTES, TO THE BIDDER'S DUTY TO PROVIDE PUBLIC RECORDS RELATING TO THIS CONTRACT, CONTACT THE CUSTODIAN OF PUBLIC RECORDS AT 321-633-1000 EXT. 11453, recordsrequest@Brevardschools.org, THE SCHOOL BOARD OF BREVARD COUNTY, FLORIDA, 2700 JUDGE FRAN JAMIESON WAY, VIERA, FL 32940.

2.35 LOCAL BUSINESS TAX RECEIPTS

A. Any Bidder whose permanent business location is in Brevard County shall submit with the bid a copy of their Local Business Tax Receipt (formerly known as an "Occupational License") issued to them by the Brevard County Tax Collector.

B. Any Bidder whose permanent business location is in a Florida county other than Brevard County shall submit with their bid a copy of their Local Business Tax Receipt issued to them by the tax collector of the county of their permanent business location, unless that county does not collect Local Business Taxes or issue Local Business Tax Receipts.

2.36 RECORDS & RIGHT TO AUDIT

The Bidder shall maintain such financial records and other records as may be prescribed by the School Board or by applicable federal and state laws, rules, and regulations. The Bidder shall retain these records for a period of five (5) years after fina payment, or until the School Board audits them, whichever event occurs first. These records shall be made available during the term of the contract and the subsequent five (5) year period for examination, transcription, and audit by the School Board, its designees, or other entities authorized by law. At the expiration of such period, Bidder, if requested by the School Board, will turn over such records to the School Board to be kept for such time as the School Board may elect.

2.37 CHANGES IN SCOPE OF WORK/SERVICE

A. The School Board may order changes in the work/service consisting of additions, deletions, or other revisions within the general scope of the contract. No claims may be made by the Bidder that the scope of the project or of the Bidder's services has been changed, requiring changes to the amount of compensation to the Bidder or other adjustments to the contract, unless such changes or adjustments have been made by written amendment to the contract signed by the School Board Chair and the Bidder.

B. If the Bidder believes that any particular work/service is not within the scope of work/service of the contract, is a material change, or will otherwise require more compensation to the Bidder, the Bidder must immediately notify the School Board's Representative in writing of this belief. If the School Board's Representative believes that the particular work/service is within the scope of the contract as written, the Bidder will be ordered to and shall continue with the work/service as changed and at the cost stated for the work/service within the scope. The Bidder must assert its right to an adjustment under this clause within thirty (30) days from the date of receipt of the written order.

C. The School Board reserves the right to negotiate with the awarded Bidder(s) without completing the competitive bidding process for materials, products, and/or services similar in nature to those specified within this ITB for which requirements were not known when the ITB was released.

2.38 MODIFICATIONS DUE TO PUBLIC WELFARE OR CHANGE IN LAW

The School Board shall have the power to make changes in the contract as the result of changes in Florida law and/or rules of the School Board to impose new rules and regulations on the Bidder under the contract relative to the scope and methods of providing services as shall from time-to-time be necessary and desirable for the public welfare. The School Board shall give the Bidder notice of any proposed change and an opportunity to be heard concerning those matters. The scope and method of providing services as referenced herein shall also be liberally construed to include, but is not limited to, the manner, procedures, operations and obligations, financial or otherwise, of the Bidder. In the event any future change in Federal, State or County law or the rules of the School Board materially alters the obligations of the Bidder, or the benefits to the School Board, then the contract shall be amended consistent therewith. Should these amendments materially alter the obligations of the Bidder, then the Bidder or the School Board shall be entitled to an adjustment in the rates and charges established under the contract. Nothing contained in the contract shall require any party to perform any act or function contrary to law. The School Board and Bidder agree to enter into good faith negotiations regarding modifications to the contract, which may be required in order to implement changes in the interest of the public welfare or due to change in law. When such modifications are made to the contract, the School Board and the Bidder shall negotiate in good faith, a reasonable and appropriate adjustment for any changes in services or other obligations required of the Bidder directly and demonstrably due to any modification in the contract under this clause.

2.39 RIGHT TO REQUIRE PERFORMANCE

A. The failure of the School Board at any time to require performance by the Bidder of any provision hereof shall in no way affect the right of the School Board thereafter to enforce same, nor shall waiver by the School Board of any breach of any provision hereof be taken or held to be a waiver of any succeeding breach of such provision or as a waiver of any provision itself.

B. In the event of failure of the Bidder to deliver services in accordance with the contract terms and conditions, the School Board, after due written notice, may procure the services from other sources and hold the Bidder responsible for any resulting additional purchase and administrative costs. This remedy shall be in addition to any other remedies that the School Board may have.

2.40 FORCE MAJEURE

The School Board and the Bidder will exercise every reasonable effort to meet their respective obligations as outlined in this ITB and the ensuing contract, but shall not be liable for delays resulting from force majeure or other causes beyond their reasonable control, including, but not limited to, compliance with any government law or regulation, acts of God, acts or omissions of the other party, government acts or omissions, fires, strikes, national disasters, wars, riots, transportation problems and/or any other cause whatsoever beyond the reasonable control of the parties. Any such cause will extend the performance of the delayed obligation to the extent of the delay so incurred. Force Majeure will include epidemics and quarantine restrictions as acts of God and governmental law and regulation.

2.41 BIDDER'S PERSONNEL

During the performance of the contract, the Bidder agrees to the following:

A. The Bidder shall not discriminate against any employee or applicant for employment because of race, religion, color, sex, age, handicap or national origin, except when such condition is a bona fide occupational qualification reasonably necessary for the normal operations of the Bidder. The Bidder agrees to post in conspicuous places, visible to employees and applicants for employment, notices setting forth the provisions of this nondiscrimination clause.

B. The Bidder, in all solicitations or advertisements for employees placed by or on behalf of the Bidder, shall state that such Bidder is an Equal Opportunity Employer.

C. Notices, advertisements, and solicitations placed in accordance with federal law, rule, or regulation shall be deemed sufficient for the purpose of meeting the requirements of this section.

D. The Bidder shall include the provisions of the foregoing paragraphs A, B, and C, above, in every subcontract or purchase order so that the provisions will be binding upon each Bidder.

E. The Bidder and any sub-contractor shall pay all employees working on this contract not less than minimum wage specified in the Fair Labor Standards Act (29 CFR 510-794) as amended.

F. Any information concerning the School Board, its products, services, personnel, policies or any other aspect of its business learned by the Bidder or personnel furnished by the Bidder in the course of providing services pursuant to the Agreement, shall be held in confidence and shall not be disclosed by the Bidder or any employee or agents of the Bidder or personnel furnished by the Bidder, without the prior written consent of the School Board.

G. All employees assigned by the Bidder to the performance of work under this contract shall be physically able to do their assigned work. It shall be the Bidder's responsibility to ensure that all employees meet the physical standards to perform the work assigned and are free from communicable diseases. This requirement also includes acceptable hygiene habits of Bidder's employees.

H. The personnel employed by the Bidder shall be capable employees, age 18 years or above, qualified in this type of work.

I. It is the Bidder's responsibility to ensure that all employees are legally allowed to work in the United States in accordance with Immigration Policies.

J. The Bidder's employees shall be required to dress neatly, commensurate with the tasks being performed.

K. All School Board facilities are tobacco free. The School Board prohibits the use of tobacco in school buildings. Such prohibition also applies on school grounds, on school buses, and/or at any school-related event. Refer to Board Policies, 7434 - use of tobacco on school premises.

L. It is the Bidders responsibility to see that every employee on the Bidder's work force is provided and wears an identification Badge or company shirt/uniform in order to maintain security at the school's facility. It shall be Bidder's responsibility to inform the School Board Representative(s) of all new employees promptly at time of employment. All visitors, including volunteers and Bidders, are to check in and out with the front office using the applicable software and must wear a badge indicating their visitor status. Refer to Board Policies, 9150 – School Visitors.

M. The Bidder shall require employees to be dressed in their appropriate work attire when reporting for duty.

N. The Bidder shall prohibit their employees from disturbing papers on desks, opening desk drawers or cabinets, or using telephone or office equipment provided for official use.

O. The Bidder shall require their employees to comply with the instructions pertaining to conduct and building regulations, issued by duly appointed officials, such as the building managers, guards, inspectors, etc.

P. The School Board's Representative(s) will determine how the Bidder will receive access to the facility.

Q. If keys are provided and lost, the Bidder will be responsible for any and all costs associated with replacement keys and re-keying of the facility.

R. When requested, the Bidder shall cooperate with any ongoing SCHOOL BOARD investigation involving economic loss or damage to SCHOOL BOARD buildings, or SCHOOL BOARD or personal property therein. The SCHOOL BOARD reserves the right to require any employee of the Bidder to submit to a polygraph test if the SCHOOL BOARD has a reasonable suspicion that the employee is or was involved in the incident or activity under investigation. The Bidder shall obtain a waiver from the employee authorizing the release to the SCHOOL BOARD of information acquired by the Bidder from the polygraph test. The SCHOOL BOARD, at its discretion, may require that the Bidder immediately remove the employee under investigation from working within SCHOOL BOARD buildings for the following reasons: 1) The employee's refusal to submit to a polygraph test in the above circumstances, or 2) an employee's refusal to sign the waiver referenced above or 3) an analysis of the polygraph test indicates that the employee is or was involved in the incident under investigation. If the test results show involvement on the part of the Bidder's employee, the Bidder will be obligated to cover the cost of the examination. If the test results indicate that the Bidder's employee was not involved in the incident, when the SCHOOL BOARD will pay for the cost of the examination.

S. CONTROLLED SUBSTANCE OR ALCOHOL ABUSE ON SCHOOL BOARD PROPERTY: The Bidder(s) is hereby notified that the unlawful manufacture, distribution, dispensation, possession or use of a controlled substance or alcohol is prohibited on any School Board property, or at any school board activities. Violations may subject the Bidder and/or the Bidder's employee(s) to prosecution, fines, imprisonment and/or cancellation of this or any other contract(s) that this Bidder presently holds. The Bidder(s) are required by this School Board to take appropriate disciplinary action in such cases and/or require that the employee(s) satisfactory participation in a rehabilitation program.

T. Any Bidder's employee convicted of violating a criminal drug statute in the workplace must report the conviction to the employer within five (5) workdays. Bidders (Employers) are required to report such convictions to the School Board within ten (10) workdays of receiving this information.

U. The School Board is committed to the education and safety of its students and employees. To that end, any Bidder awarded a contract will be required to assure that the personnel assigned to the project, do not possess criminal records that would violate the School Board's standards for employment as set forth by the Florida Department of Education. Each Bidder must certify that the company and its employees are or will be in compliance with those standards for the project awarded.

V. The Bidder shall strictly prohibit interaction between their employees and the student(s).

W. Bidder's employees may not solicit, distribute or sell products while on School Board property.

2.47 PERFORMANCE BOND –N/A

2.48 FIDELITY BOND- N/A

2.49 NEW MATERIAL

Unless otherwise provided for in this specification, the Bidder represents and warrants that the goods, materials, supplies, or components offered to the School Board under this Bid solicitation are new, not used or reconditioned, and are not of such age or so deteriorated as to impair their usefulness or safety and that the goods, materials, supplies, or components offered are current production models of the respective manufacturer. If the Bidder believes that furnishing used or reconditioned goods, materials, supplies, or components will be in the School Board's interest, the Bidder shall so notify the School Board Buyer in writing no later than ten (10) working days prior to the date set for opening of Bids. The notice shall include the reasons for the request and any benefits that may accrue to the School Board if the Buyer authorizes the bidding of used or reconditioned goods, materials, supplies, or components.

2.50 DAMAGES

Due to the nature of the services to be provided and the potential impact to the School Board for loss of Large Cafeteria Equipment, the Bidder cannot disclaim consequential or inconsequential damages related to the performance of this contract. The Bidder shall be responsible and accountable for any and all damages, directly or indirectly, caused by the actions or inaction of its employees, staff, or sub-consultants. There are no limitations to this liability.

2.51 CONFLICT OF INTEREST FORM

All Bidders shall complete and have notarized the attached disclosure form of any potential conflict of interest that the Bidder may have due to ownership, other clients, contracts, or interest associated with this project.

2.52 LITIGATION

Bidders shall submit details of all litigation, arbitration or other claims, whether pending or resolved in the last five years, with the exception of immaterial claims which are defined herein as claims with a possible value of less than $25,000.00 or which have been resolved for less than $25,000.00. Notwithstanding the foregoing, all litigation, arbitration or other claims, of any amount, asserted by or against a state, city, county, town, School Board, political subdivision of a state, special district or any other governmental entity shall be disclosed. Please indicate for each case the year, name of parties, cause of litigation, matter in dispute, disputed amount, and whether the award was for or against the Bidder.

2.53 BID PROTESTS

Solicitation or contract award protests shall be resolved under procedures set forth in School Board policy 6320 and in conformity with the requirements of F.S. 120.57(3) and the Uniform Rules at F.A.C. Chapters 28-106 and -110.

2.53.1 DEFINITIONS

A. "Decision or intended decision" means:
   i. the contents of a solicitation, including addenda;
   ii. a determination that a specified procurement can be made only from a single source;
   iii. rejection of a response or all responses to a solicitation; or
   iv. intention to award a contract as indicated by a posted solicitation tabulation or other written notice.

B. "Filed" means that a document has been physically received and time/date stamped by the Procurement and Distribution Services department within the time required by this policy.

C. "Person" means an individual and includes company, corporation, partnership, limited partnership, joint venture or any other legally recognized business entity.

2.53.2 NOTICE OF DECISION OR INTENDED DECISION

The Director of Procurement and Distribution Services or designee shall post notice of a decision or intended decision by electronic posting. All such notices shall contain the following statement: "Failure to file a protest within the time prescribed in section 120.57(3), Florida Statutes, or failure to post a bond or other security required by law within the time allowed for filing a bond shall constitute a waiver of proceedings under Chapter 120, Florida Statutes."

2.53.3 NOTICE OF PROTEST

Any person who is adversely affected by the agency decision or intended decision and intends to protest the decision or intended decision, shall file a notice of protest in writing with the Director of Procurement and Distribution Services within seventy-two (72) hours after the posting of the notice of decision or intended decision. With respect to a protest of the terms, conditions, and specifications contained in a solicitation, including any provisions governing the methods for ranking bids, proposals, or replies, awarding agreements, reserving rights of further negotiation, or modifying or amending any contract, the notice of protest shall be filed in writing within seventy-two (72) hours after the posting of the solicitation.

A. A notice of protest should not be filed before the seventy-two (72) hour period begins. The seventy-two (72) hour period begins upon posting of the Decision or Intended Decision.

B. The notice of protest must be actually received by the District's Procurement and Distribution Services department before the seventy-two (72) hour period expires. The seventy-two (72) hour period excludes Saturdays, Sundays, and holidays when the District administrative office is closed. The seventy-two (72) hour period is not extended by service of the notice of protest by mail. Failure to timely file a notice of protest shall constitute a waiver of proceedings under this section and F.S. 120.57(3).

C. The notice of protest shall identify the procurement by number and title or any other language that will clearly enable the District to identify it; and the person that intends to protest the decision.

2.53.4 FORMAL WRITTEN PROTEST

In addition to filing a notice of protest, a protesting person must file a formal written protest.

The formal written protest must be filed with the Director of Procurement and Distribution Services within ten (10) days after the date the notice of protest is filed. Failure to timely file the formal written protest shall constitute a waiver of proceedings under this Policy and F.S. 120.57(3). The ten (10) day period for filing the petition is not extended by service of the petition by mail.

A. The formal written protest shall be a petition that:
   i. states with particularity the facts and law upon which the protest is based;
   ii. contains all the information specified in Rule 28-106.201(2), FAC and Rule 28-106.301(2), FAC;
   iii. is substantially in the form of petition set forth in Rule 28-110.004(2), FAC, naming "The School Board of Brevard County, Florida" as the Respondent; and
   iv. should include a request for a hearing involving disputed issues of material fact; or, if the relevant facts are not in dispute, the petition should so allege and request a hearing not involving disputed issues of material fact.

B. Pursuant to Rule 28-110.004(1), FAC, if the formal written protest is filed in proper form within the seventy-two (72) hour period for filing a notice of protest, the formal written protest will also constitute the notice of protest, and all time limits applicable

to a notice of protest are waived and the time limits relative to formal written protests shall apply.

2.53.5 PROTEST BOND

Any person who files an action protesting a decision or intended decision pertaining to a solicitation or contract award shall post with the Director of Procurement and Distribution Services, at the time of filing the formal written protest, a bond secured by an acceptable surety company in Florida, payable to "The School Board of Brevard County, Florida" in an amount of $25,000.00 or two percent (2%) of the estimated contract amount, whichever is greater, for projects valued over $500,000.00; and five percent (5%) of the estimated contract amount for all other projects.

A. The Director of Procurement and Distribution Services shall provide the estimated contract amount to the protester within seventy-two (72) hours (excluding Saturdays, Sundays, and holidays when the District administrative offices are closed) after the filing of the notice of protest. The estimated contract amount is not subject to protest under this Policy or F.S. 120.57(3). This information may be provided as part of the decision or intended decision documents. In lieu of a bond, the Director of Procurement and Distribution Services may accept a cashier's check, official bank check, or money order in the amount of the bond.

B. The bond shall be conditioned upon the payment of all costs and charges which may be adjudged against the protestor in the administrative hearing in which the action is brought and in any subsequent appellate court proceeding.

C. If, after completion of the administrative hearing process and any appellate court proceedings, the Board prevails, it shall be entitled to recover all costs and charges which are included in the final order or judgment, excluding attorney's fees. Upon payment of such costs and charges by the person protesting the decision or intended decision or contract award, the bond, cashier's check, official bank check, or money order shall be returned to the protestor. If, after the completion of the administrative hearing process and any appellate court proceedings, the protestor prevails, the protestor may recover from the Board the costs and charges which are included in the final order or judgment, excluding attorney's fees.

2.53.6 INFORMAL RESOLUTION MEETING

The Director of Procurement and Distribution Services shall provide an opportunity to resolve the protest by mutual agreement between the parties within seven (7) business days (excluding Saturdays, Sundays, and holidays when the District administrative offices are closed) of receipt of the formal written protest. All affected parties shall be notified of the notice of protest.

A. Hearing.
If the protest is not resolved by mutual agreement within seven (7) business days (excluding Saturdays, Sundays, and holidays when the District administrative offices are closed) after receipt of the formal written protest; and

i. if there is no disputed issue of material fact, an informal proceeding shall be conducted pursuant to F.S. 120.57(2) and applicable Board Policies, and may be conducted before an impartial hearing officer who is a member in good standing of The Florida Bar; or

ii. if there is a disputed issue of material fact, in accordance with F.S. 120.569, the protest shall be referred within fifteen (15) days after the Director of Procurement and Distribution Services receives the formal written protest to the Division of Administrative Hearings for a formal hearing under F.S. 120.57(1).

B. As stated in F.S. 120.57(3)(f), the burden of proof shall rest with the party protesting the proposed agency action.

C. In any bid-protest proceeding contesting an intended agency action to reject all bids, proposals, or replies, the standard of review shall be whether the Board's intended action is illegal, arbitrary, dishonest, or fraudulent.

D. In competitive-procurement protests other than those contesting an intended agency action to reject all bids, proposals, or replies, the hearing officer or administrative law judge will conduct a de novo proceeding to determine whether the Board's proposed action is contrary to the governing statutes, the Board's Policies, or the solicitation documents. The standard of proof for such proceedings shall be whether the proposed agency action was clearly erroneous, contrary to competition, arbitrary, or capricious.

2.53.7 STOPPING THE PROCUREMENT PROCESS

Upon receipt of the formal written protest that has been timely filed, the solicitation or contract award process shall be stopped until the subject of the protest is resolved by final agency action, unless the Superintendent sets forth in writing particular facts and circumstances which require the continuance of the solicitation or contract award process without delay in order to avoid an immediate and serious danger to the public health, safety, or welfare.

2.54 PREFERENCE TO FLORIDA BUSINESSES (Where applicable)

Effective July 1, 2012, when a School Board is required to make purchases of personal property through competitive solicitation and the lowest responsible and responsive bid, proposal or reply is by a Bidder whose principal place of business is in a state or political subdivision which grants a preference by that state or political subdivision, then the School Board shall award an equal preference to the lowest responsible and responsive Bidder having a principal place of business within Florida. In a competitive solicitation in which the lowest bid is submitted by a Bidder whose principal place of business is located outside the state, and that state does not grant a preference in competitive solicitation to Bidders having a principal place of business in that state, the preference to the lowest responsible and responsive Bidder having a principal place of business in the State of Florida shall be 5 percent. F.S. 287.084(1)(a).

A Bidder whose principal place is outside this state must accompany any written bid, proposal or reply documents with a written opinion of an attorney at law licensed to practice law in that foreign state, as to the preferences, if any or none, granted by the law of that state to its own business entities whose principal places of business are in that foreign state in the letting of any or all public contracts. F.S. 287.084(2).

Please complete the form titled "Bidder's Statement of Principal Place of Business" and include it with your submittal.

2.55 BUY AMERICAN (Where applicable)

7 CFR PART 210.21 (d)] Section 104(d) of the William F. Goodling Child Nutrition Reauthorization Act of 1998 (Public Law 105-336) added a provision, Section 12(n) to the NSLA (42 USC 1760(n)), requiring school food authorities (SFAs) to purchase, to the maximum extent practicable, domestic commodity or product. Section 12(n) of the NSLA defines "domestic commodity or product" as an agricultural commodity that is produced in the United States and a food product that is processed in the United States using substantial agricultural commodities that are produced in the United States. "Substantial" means that over 51 percent of the final processed product consists of agricultural commodities that were grown domestically. Products from Guam, American Samoa, Virgin Islands, Puerto Rico, and the Northern Mariana Islands are allowed under this provision as territories of the United States. The Buy American provision (7 CFR Part 210.21(d)) is one of the procurement standards SFAs must comply with when purchasing commercial food products served in the school meals programs.

2.56 DEBARMENT AND SUSPENSION (Where Applicable)
SFAs must obtain satisfaction that an FSMC is neither excluded nor disqualified before doing business with the FSMC. The uniform Federal suspension/debarment certification has been abolished and the collection of paper certifications is no longer mandatory. Current rules provide greater flexibility in meeting requirements. An SFA may meet the requirements by any one of three methods. They are:

1. Checking the Excluded Parties List System. This is available on the Internet at http://epls.arnet.gov

2. Collecting a certification that the contractor is neither excluded nor disqualified. Since a Federal certification form is no longer available, an entity electing this method must devise its own certification.

3. Including a clause to this effect in the solicitation/contract

   Example language: The prospective bidder certifies, by submission and signature of this bid, that the bidder complies fully with the Federal Debarment Certification regarding debarment suspension, ineligibility and voluntary exclusion. As required by Executive Order 12549, Debarment and Suspension, and implemented at 34 CFR, part 85, as defined at the 34 CFR part 85, sections 85.105 and 85.110-(ed80-0013).

A. The prospective lower tier ($25,000) participant certifies, by submission and of this bid, that neither it nor its principals is presently debarred, suspended, proposed for debarment, declared ineligible, or voluntarily excluded from participation in this transaction by any federal department or agency.

B. Where the prospective lower tier participant is unable to certify to any of the statements in this certification, such prospective participants shall attach an explanation to this bid.

2.57 RECORDS RETENTION (2 CFR 200.318(i)) (Where applicable)
All Bidders, contractors and subcontractors must retain all records pertaining to this contract for three years after the District makes final payments and all other pending matters are closed. (Applies to all contracts, subcontracts and subgrants when required by Federal grant program legislation)

2.58 DISCOUNTS, REBATES AND CREDITS (Where applicable)
All goods, services or monies received as the result of any equipment or USDA Foods rebate shall be credited to the School Food Authority's nonprofit food service account.

2.59 CIVIL RIGHTS (Where applicable)
The awarded Bidders shall comply with Title VI of the Civil Rights Act of 1964, as amended; USDA regulations implementing Title IX of the Education Amendments; Section 504 of the Rehabilitation Act of 1973; Age Discrimination Act of 1975; 7 C.F.R. Parts 15, 15a, and 15b; and FNS Instruction 113-1, Civil Rights Compliance and Enforcement— Nutrition Programs and Activities, and any additions or amendments.

2.60 PROHIBITION OF GRATUITIES (Where applicable)
By submission of a bid, a contractor certifies that no employee of SFA has or shall benefit financially or materially from such bid or subsequent contract. Any contract issued as a result of this ITB may be terminated at such time as it is determined that gratuities of any kind were either offered or received by any of the aforementioned persons.

2.61 PROCUREMENT OF RECOVERED MATERIALS (CFR 200.322) (Where applicable)
A non-Federal entity that is a state agency or agency of a political subdivision of a state and its contractors must comply with section 6002 of the Solid Waste Disposal Act, as amended by the Resource Conservation and Recovery Act. The requirements of Section 6002 include procuring only items designated in guidelines of the Environmental Protection Agency (EPA) at 40 CFR part

247 that contain the highest percentage of recovered materials practicable, consistent with maintaining a satisfactory level of competition, where the purchase price of the time exceeds $10,000 or the value of the quantity acquired during the preceding fiscal year exceeded $10,000; procuring solid waste management services in a manner that maximizes energy and resource recovery; and establishing an affirmative procurement program for procurement of recovered materials identified in the EPA guidelines.

2.62 COPELAND "ANTI-KICKBACK" ACT (Appendix II to 2 CFR 200) (Where applicable)
All Bidders, contractors and subcontractors must comply with the Copeland "Anti-Kickback" Act (18 U.S.C. 874) as supplemented in Department of Labor regulations (29 CFR part 3). (Applies to all contracts and subgrants for construction or repair). (Applies to all contracts, subcontracts and subgrants when required by Federal grant program legislation for construction or repair).

2.63 INSPECTION OF FACILITY (Where applicable)
The School Board of Brevard County, FL reserves the right to inspect the contractor's preparation and storage facilities, and transporting vehicles prior to award of Contract and without notice at any time during each Contract Term, including the right to be present during preparation and delivery of meals.

2.64 DEFINITIONS
As used in this Bid, the following terms shall have the meanings set forth below:

Bidder: That person or entity, including employees, servants, partners, principals, agents and assignees of the person or entity that has submitted a bid for the purpose of obtaining business with the School Board to provide the product and/or services set forth herein.

Contract Administrator: The School Board's Director of Procurement & Distribution Services or designee shall serve as Contract Administrator. The Contract Administrator shall be responsible for addressing any concerns within the scope of the contract. Any changes to the resulting contract shall be done in writing and authorized by the School Board Chair or authorized designee.

Contract: The document resulting from this solicitation between the School Board and the Bidder, including this solicitation, along with any written addenda and other written documents, which are expressly incorporated by reference.

Bidder's Project Manager: The Project Manager has responsibility for administering this contract for the awarded Bidder(s) and will be designated prior to the issue of the resulting Price Agreement or Purchase Order.

Day: The word "day" means each calendar day or accumulation of calendar days.

Director: The Director is the Director of Procurement & Distribution Services for the School Board.

Exceptions to Bid: An exception is defined as the Bidder's inability or unwillingness to meet a term, condition, specification, or requirement in the manner specified in the bid.

Person or Persons: An individual, firm, partnership, corporation, association, executor, administrator, trustee, or other legal entity, whether singular or plural, masculine or feminine, as the context may require.

School Board: The word School Board refers to the elected officials of the School Board of Brevard County, Florida, its duly authorized representatives, and any school, department, or unit within the School Board.

School Board's Project Manager(s): The Project Manager(s) have responsibility for the day-to-day administration of the resulting contract for the School Board and will be designated prior to award of the resulting purchase order.

Using Agency: The term "using agency" used herein refers to any school, department, committee, authority, or another unit in the School Board using supplies or procuring contractual services as provided for in the Procurement Department of the School Board.

3.0 **SUBMITTAL REQUIREMENTS - (Submit in the following order)**

A. Completed Bidder's Acknowledgement and agreement of the Standard Terms and Conditions.
   I. Drug Free Workplace Certification
   II. Instruction for Debarment Certification
   III. Certification Regarding Debarment
   IV. Emergency/Storm Related Calastrophe Acknowledgement
   V. Notification Regarding Public Entity Crime and Discriminatory Vendor Lists
   VI. Prohibition Against Contracting with Scrutinized Companies
   VII. Conflict of Interest
   VIII. Confidential Materials Acknowledgement

B. Any addenda issued subsequent to the release of this solicitation must be signed and returned with the firm's bid. **Failure to return signed addenda may be cause for the bid to be considered non-responsive.**

C. Completed Exhibit A: Price Sheet

D. List at least three (3) recent references where the proposed product has been used within the past year. Use of the attached form will aid in evaluation.

E. Certified Business Program Reciprocity Affidavit – If Applicable.

F. Bidder's Statement of Principal Place of Business – If Applicable

G. All Bidders, including predecessors or related Bidder or entity, shall identify any litigation in which they have been involved in, including arbitration and administrative proceedings, during the past five (5) years involving claims for excess of ten (10) percent of the contact value. Include a brief legal description of the dispute and its current status. Where the action or lawsuit involved a similar project as herein discussed, Bidder shall describe the particular circumstances giving rise to the dispute.

H. Local Business Tax Receipts

I. Current Request for Taxpayer Identification Number and Certification (Form W-9).

J. Attach evidence of required insurance coverage or proof of insurability in the amounts indicated. If available, a properly completed ACORD Form is preferable. Upon award, final forms must contain the correct solicitation and/or project number and School Board contact person.

K. The Bidder must submit with his bid the name, address, and phone number of the person(s) to be contacted for the placement of an order and the coordination of service. A contact for both regular workhours and after-hours, weekends, and holidays must be identified.

L. If a Bidder must subcontract any portion of a contract for any reason, he must state the name and address of the subcontractor and the name of the person to be contacted. The School Board also reserves the right to reject a bid or any Bidder if the bid names a subcontractor who has previously failed to deliver on time contracts of similar nature, or who is not in a position to perform properly this award. The School Board reserves the right to inspect all facilities of any subcontractors in order to make a determination as to the foregoing.

APPROVED
By Kevin at 9:34 am, Jun 17, 2024

OF LIABILITY INSURANCE

DATE (MM/DD/YYYY): 6/14/2024

THIS CERTIFICATE IS ISSUED AS A MATTER OF INFORMATION ONLY AND CONFERS NO RIGHTS UPON THE CERTIFICATE HOLDER. THIS CERTIFICATE DOES NOT AFFIRMATIVELY OR NEGATIVELY AMEND, EXTEND OR ALTER THE COVERAGE AFFORDED BY THE POLICIES BELOW. THIS CERTIFICATE OF INSURANCE DOES NOT CONSTITUTE A CONTRACT BETWEEN THE ISSUING INSURER(S), AUTHORIZED REPRESENTATIVE OR PRODUCER, AND THE CERTIFICATE HOLDER.

IMPORTANT: If the certificate holder is an ADDITIONAL INSURED, the policy(ies) must have ADDITIONAL INSURED provisions or be endorsed. If SUBROGATION IS WAIVED, subject to the terms and conditions of the policy, certain policies may require an endorsement. A statement on this certificate does not confer rights to the certificate holder in lieu of such endorsement(s).

PRODUCER
Stahl Morse & Associates
1000 Wekiva Springs Road
Longwood FL 32779
License#: L004874

CONTACT NAME:
PHONE (A/C, No, Ext): 407-869-4200 FAX (A/C, No): 407-862-7656
E-MAIL ADDRESS: commercial@stahlinsurance.com

INSURER(S) AFFORDING COVERAGE	NAIC #
INSURER A : BusinessFirst Insurance Company	11697
INSURER B :	
INSURER C :	
INSURER D :	
INSURER E :	
INSURER F :	

INSURED
International Restaurant Distributors, Inc.
150 Semoran Commerce Pl
Apopka FL 32703
INTERES-02

COVERAGES **CERTIFICATE NUMBER:** 1243821035 **REVISION NUMBER:**

THIS IS TO CERTIFY THAT THE POLICIES OF INSURANCE LISTED BELOW HAVE BEEN ISSUED TO THE INSURED NAMED ABOVE FOR THE POLICY PERIOD INDICATED. NOTWITHSTANDING ANY REQUIREMENT, TERM OR CONDITION OF ANY CONTRACT OR OTHER DOCUMENT WITH RESPECT TO WHICH THIS CERTIFICATE MAY BE ISSUED OR MAY PERTAIN, THE INSURANCE AFFORDED BY THE POLICIES DESCRIBED HEREIN IS SUBJECT TO ALL THE TERMS, EXCLUSIONS AND CONDITIONS OF SUCH POLICIES. LIMITS SHOWN MAY HAVE BEEN REDUCED BY PAID CLAIMS.

INSR LTR	TYPE OF INSURANCE	ADDL INSD	SUBR WVD	POLICY NUMBER	POLICY EFF (MM/DD/YYYY)	POLICY EXP (MM/DD/YYYY)	LIMITS	
	COMMERCIAL GENERAL LIABILITY						EACH OCCURRENCE	$
	CLAIMS-MADE OCCUR						DAMAGE TO RENTED PREMISES (Ea occurrence)	$
							MED EXP (Any one person)	$
							PERSONAL & ADV INJURY	$
	GEN'L AGGREGATE LIMIT APPLIES PER						GENERAL AGGREGATE	$
	POLICY PRO-JECT LOC						PRODUCTS - COMP/OP AGG	$
	OTHER							$
	AUTOMOBILE LIABILITY						COMBINED SINGLE LIMIT (Ea accident)	$
	ANY AUTO						BODILY INJURY (Per person)	$
	OWNED AUTOS ONLY / SCHEDULED AUTOS						BODILY INJURY (Per accident)	$
	HIRED AUTOS ONLY / NON-OWNED AUTOS ONLY						PROPERTY DAMAGE (Per accident)	$
								$
	UMBRELLA LIAB / OCCUR						EACH OCCURRENCE	$
	EXCESS LIAB / CLAIMS-MADE						AGGREGATE	$
	DED / RETENTION $							$
A	WORKERS COMPENSATION AND EMPLOYERS' LIABILITY		Y	052117655	1/1/2024	1/1/2025	X PER STATUTE / OTH-ER	
	ANY PROPRIETOR/PARTNER/EXECUTIVE OFFICER/MEMBER EXCLUDED? Y / N (Mandatory in NH)	N / A					E.L. EACH ACCIDENT	$ 1,000,000
	If yes, describe under DESCRIPTION OF OPERATIONS below						E.L. DISEASE - EA EMPLOYEE	$ 1,000,000
							E.L. DISEASE - POLICY LIMIT	$ 1,000,000

DESCRIPTION OF OPERATIONS / LOCATIONS / VEHICLES (ACORD 101, Additional Remarks Schedule, may be attached if more space is required)

Waiver of Subrogation is automatically provided for City of Jacksonville and their respective members, officers, officials, employees, and agents where required by written contract subject to the provisions of endorsement WC000313 0484 for Workers Compensation coverage.

CERTIFICATE HOLDER

City of Jacksonville
501 E Bay Street
Jacksonville FL 32202

CANCELLATION

SHOULD ANY OF THE ABOVE DESCRIBED POLICIES BE CANCELLED BEFORE THE EXPIRATION DATE THEREOF, NOTICE WILL BE DELIVERED IN ACCORDANCE WITH THE POLICY PROVISIONS.

AUTHORIZED REPRESENTATIVE

© 1988-2015 ACORD CORPORATION. All rights reserved.

WAIVER OF OUR RIGHT TO RECOVER FROM OTHERS ENDORSEMENT

We have the right to recover our payments from anyone liable for an injury covered by this policy. We will not enforce our right against the person or organization named in the Schedule. (This agreement applies only to the extent that you perform work under a written contract that requires you to obtain this agreement from us.)

This agreement shall not operate directly or indirectly to benefit anyone not named in the Schedule.

Schedule

Blanket Waiver of Subrogation Applies

This endorsement changes the policy to which it is attached and is effective on the date issued unless otherwise stated.

Date Prepared: November 21, 2023

Carrier: BusinessFirst Insurance Company

Effective Date of Endorsement: January 1, 2024

Policy Number: 521-17655 Countersigned by:

Insured: International Restaurant Distributors, Inc.

"Includes copyright material of the National Council on Compensation Insurance, Inc. used with its permission. Copyright 1984 NCCI"

APPROVED
By Kevin at 9:33 am, Jun 17, 2024

CERTIFICATE OF LIABILITY INSURANCE

DATE (MM/DD/YYYY) 06/14/2024

THIS CERTIFICATE IS ISSUED AS A MATTER OF INFORMATION ONLY AND CONFERS NO RIGHTS UPON THE CERTIFICATE HOLDER. THIS CERTIFICATE DOES NOT AFFIRMATIVELY OR NEGATIVELY AMEND, EXTEND OR ALTER THE COVERAGE AFFORDED BY THE POLICIES BELOW. THIS CERTIFICATE OF INSURANCE DOES NOT CONSTITUTE A CONTRACT BETWEEN THE ISSUING INSURER(S), AUTHORIZED REPRESENTATIVE OR PRODUCER, AND THE CERTIFICATE HOLDER.

IMPORTANT: If the certificate holder is an ADDITIONAL INSURED, the policy(ies) must have ADDITIONAL INSURED provisions or be endorsed. If SUBROGATION IS WAIVED, subject to the terms and conditions of the policy, certain policies may require an endorsement. A statement on this certificate does not confer rights to the certificate holder in lieu of such endorsement(s).

PRODUCER
Sentry Insurance
1800 North Point Drive
Stevens Point, WI 54481

CONTACT NAME: Sentry Customer Service
PHONE (A/C, No, Ext): 800-473-6879
FAX (A/C, No): 800-514-7191
EMAIL ADDRESS: businessproducts_direct@sentry.com

INSURER(S) AFFORDING COVERAGE	NAIC #
INSURER A : Sentry Insurance a Mutual Company	24988
INSURER B :	
INSURER C :	
INSURER D :	
INSURER E :	
INSURER F :	

INSURED
International Restaurant Distributors Inc
150 Semoran Commerce Pl
Apopka, FL 32703-4670

COVERAGES **CERTIFICATE NUMBER:** 3947108 **REVISION NUMBER:**

THIS IS TO CERTIFY THAT THE POLICIES OF INSURANCE LISTED BELOW HAVE BEEN ISSUED TO THE INSURED NAMED ABOVE FOR THE POLICY PERIOD INDICATED. NOTWITHSTANDING ANY REQUIREMENT, TERM OR CONDITION OF ANY CONTRACT OR OTHER DOCUMENT WITH RESPECT TO WHICH THIS CERTIFICATE MAY BE ISSUED OR MAY PERTAIN, THE INSURANCE AFFORDED BY THE POLICIES DESCRIBED HEREIN IS SUBJECT TO ALL THE TERMS, EXCLUSIONS AND CONDITIONS OF SUCH POLICIES. LIMITS SHOWN MAY HAVE BEEN REDUCED BY PAID CLAIMS.

INSR LTR	TYPE OF INSURANCE	ADDL INSR	SUBR WVD	POLICY NUMBER	POLICY EFF (MM/DD/YYYY)	POLICY EXP (MM/DD/YYYY)	LIMITS	
A	X COMMERCIAL GENERAL LIABILITY CLAIMS-MADE / X OCCUR GEN'L AGGREGATE LIMIT APPLIES PER X POLICY / PRO-JECT / LOC OTHER			2563986002	06/11/2024	06/11/2025	EACH OCCURRENCE	$ 1,000,000
							DAMAGE TO RENTED PREMISES (Ea occurrence)	$ 500,000
							MED EXP (Any one person)	$ 5,000
							PERSONAL & ADV INJURY	$ 1,000,000
							GENERAL AGGREGATE	$ 3,000,000
							PRODUCTS - COMP/OP AGG	$ 2,000,000
								$
A	AUTOMOBILE LIABILITY ANY AUTO OWNED AUTOS ONLY / X SCHEDULED AUTOS X HIRED AUTOS ONLY / X NON-OWNED AUTOS ONLY			2563986003	06/11/2024	06/11/2025	COMBINED SINGLE LIMIT (Ea accident)	$ 1,000,000
							BODILY INJURY (Per person)	$
							BODILY INJURY (Per accident)	$
							PROPERTY DAMAGE (Per accident)	$
								$
A	X UMBRELLA LIAB / X OCCUR X EXCESS LIAB / CLAIMS-MADE DED / RETENTION $			2563986004	06/11/2024	06/11/2025	EACH OCCURRENCE	$ 2,000,000
							AGGREGATE	$ 2,000,000
							PRODUCTS - COMP/OP AGG	$ 2,000,000
	WORKERS COMPENSATION AND EMPLOYERS' LIABILITY ANY PROPRIETOR/PARTNER/EXECUTIVE OFFICER/MEMBER EXCLUDED? Y / N (Mandatory in NH) If yes, describe under DESCRIPTION OF OPERATIONS below		N / A				PER STATUTE / OTH-ER	
							E.L. EACH ACCIDENT	$
							E.L. DISEASE - EA EMPLOYEE	$
							E.L. DISEASE - POLICY LIMIT	$
A	Cyber Liability and Data Breach Response		N / A	2563986005	06/11/2024	06/11/2025	Policy Aggregate Limit of Liability	$ 100,000
							Retention	$ 2,500

DESCRIPTION OF OPERATIONS / LOCATIONS / VEHICLES (ACORD 101, Additional Remarks Schedule, may be attached if more space is required)
Refer to attached

CERTIFICATE HOLDER
City of Jacksonville
and their respective members, officers, officials, employees
and agents
501 E Bay St
Jacksonville, FL 32202-2927

CANCELLATION
SHOULD ANY OF THE ABOVE DESCRIBED POLICIES BE CANCELLED BEFORE THE EXPIRATION DATE THEREOF, NOTICE WILL BE DELIVERED IN ACCORDANCE WITH THE POLICY PROVISIONS.

AUTHORIZED REPRESENTATIVE
John Hyland

© 1988-2015 ACORD CORPORATION. All rights reserved.
The ACORD name and logo are registered marks of ACORD

AGENCY CUSTOMER ID: XXXXXX4675

LOC #: _____

ADDITIONAL REMARKS SCHEDULE

AGENCY		NAMED INSURED
Christopher Kopp		International Restaurant Distributors Inc
POLICY NUMBER		
2563986002		
CARRIER	NAIC CODE	
Sentry Insurance a Mutual Company	24988	EFFECTIVE DATE: 06/11/2024

ADDITIONAL REMARKS

THIS ADDITIONAL REMARKS FORM IS A SCHEDULE TO ACORD FORM,

FORM NUMBER: ACORD 25 FORM TITLE: Certificate of Liability Insurance

Certificate Details

Additional Insured status, Primary & Noncontributory and Waiver of Subrogation applies per the terms and conditions of the policy when required in written contract or written agreement.

© 2008 ACORD CORPORATION. All rights reserved.

The ACORD name and logo are registered marks of ACORD

THIS ENDORSEMENT CHANGES THE POLICY. PLEASE READ IT CAREFULLY.

BLANKET ADDITIONAL INSUREDS, PRIMARY & NONCONTRIBUTORY, WAIVER OF SUBROGATION

This endorsement modifies the coverage provided under the following Coverage Form(s):

COMMERCIAL GENERAL LIABILITY COVERAGE PART

SCHEDULE

Coverage enhancements are listed below. For details of each coverage, please read the corresponding policy provisions in the body of this endorsement.

1. **Additional Insureds - Automatic Status for 12 Additional Insured Types**
   - A. Automatic Status When Required In Written Contract Or Agreement (for Acts or Omissions In The Performance of Your Operations)
   - B. Lessor of Leased Equipment
   - C. Owners or Other Interests From Whom Land Has Been Leased
   - D. Manager or Lessor of Premise
   - E. Mortgagee, Assignee, or Receiver
   - F. Controlling Interest
   - G. Co-owner Of Insured Premises
   - H. Executors, Administrators, Trustees Or Beneficiaries
   - I. State Or Governmental Agency Or Subdivision Or Political Subdivision - Permits Or Authorizations Relating To Premises
   - J. Any Person Or Organization You Are Performing Work For
   - K. Vendors
   - L. Grantor of Franchise
2. **Primary and Noncontributory - Other Insurance Condition**
3. **Waiver Of Transfer Of Rights Of Recovery Against Others To Us (Waiver Of Subrogation) - Automatic**

With respect to the coverage provided by this endorsement, the provisions of the Coverage Form apply unless modified by the endorsement.

1. Additional Insureds - Automatic Status for 12 Additional Insured Types

Section II - Who Is An Insured is amended to include the following as additional insureds when you have agreed to add that person or organization as an Additional Insured on your policy in a written contract or written agreement with that person or organization, or because of a permit issued by a state or political subdivision; provided the injury or damage occurs subsequent to the execution of the contract or agreement or issuance of the permit and while the contract, agreement or permit remains in effect.

A. Automatic Status When Required In Written Contract Or Agreement (for Acts or Omissions In The Performance of Your Operations)

1) A person or organization with respect to liability for:

   a. "Bodily injury" or "property damage" not included in the "products-completed operations hazard"; or

   b. "Personal and advertising injury";

   caused by, in whole or in part, your acts or omissions or the acts or omissions of those acting on your behalf in the performance of your operations.

Includes copyrighted material of Insurance Services Office, Inc., with its permission.

2) With respect to insurance afforded to these additional insureds, the following additional exclusion applies:

This insurance does not apply to "bodily injury", "property damage" or "personal and advertising injury" due to rendering of or failure to render any professional service. This includes but is not limited to:

a. Legal, accounting or advertising services;

b. Preparing, approving, or failing to prepare or approve, maps, shop drawings, opinions, reports, surveys, field orders, change orders or drawings or specifications;

c. Inspection, supervision, quality control, architectural or engineering activities done by or for you on a project on which you serve as construction manager;

d. Engineering services, including related supervisory or inspection services;

e. Medical, surgical, dental, X-ray or nursing services treatment, advice or instruction;

f. Any health or therapeutic service treatment, advice or instruction;

g. Any service, treatment, advice or instruction for the purpose of appearance or skin enhancement, hair removal or replacement, or personal grooming or therapy;

h. Any service, treatment, advice or instruction relating to physical fitness, including service, treatment, advice or instruction in connection with diet, cardiovascular fitness, bodybuilding or physical training programs;

i. Optometry or optical or hearing aid services including the prescribing, preparation, fitting, demonstration or distribution of ophthalmic lenses and similar products or hearing aid devices;

j. Body piercing services;

k. Services in the practice of pharmacy;

l. Law enforcement or firefighting services; and

m. Handling, embalming, disposal, burial, cremation or disinterment of dead bodies.

This exclusion applies even if the claims against any insured allege negligence or other wrongdoing in the supervision, hiring, employment, training or monitoring of others by that insured, if the "occurrence" which caused the "bodily injury" or "property damage", or the offense which caused the "personal and advertising injury", involved the rendering of or failure to render any professional service.

B. Lessor of Leased Equipment

1) Any person(s) or organization(s) with respect to liability for "bodily injury", "property damage" or "personal and advertising injury" caused, in whole or in part, by your maintenance, operation or use of equipment leased to you by such person(s) or organization(s).

2) With respect to the insurance afforded to these additional insureds, this insurance does not apply to any "occurrence" which takes place after the equipment lease expires.

C. Owners or Other Interests From Whom Land Has Been Leased

1) Any person(s) or organization(s) with respect to liability for "bodily injury", "property damage" or "personal and advertising injury" caused, in whole or in part, by you or those acting on your behalf in connection with the ownership, maintenance or use of that part of the land leased to you by the additional insured person(s) or organization(s).

2) With respect to the insurance afforded to these additional insureds, the following additional exclusions apply:

This insurance does not apply to:

a. Any "occurrence" which takes place after you cease to lease that land;

b. Structural alterations, new construction or demolition operations performed by or on behalf of the additional insured person(s) or organization(s).

Includes copyrighted material of Insurance Services Office, Inc., with its permission.

D. Manager or Lessor of Premise

Any person(s) or organization(s) with respect to liability for "bodily injury", "property damage" or "personal and advertising injury" caused, in whole or in part, by you or those acting on your behalf in connection with the ownership, maintenance or use of that part of the premises leased to you by the additional insured person(s) or organization(s), subject to the following additional exclusions:

This insurance does not apply to:

1) Any "occurrence" which takes place after you cease to be a tenant in that premises.
2) Structural alterations, new construction or demolition operations performed by or on behalf of the person(s) or organization(s) shown in the Schedule.

E. Mortgagee, Assignee, or Receiver

Any person(s) or organization(s) with respect to their liability as mortgagee, assignee or receiver and arising out of the ownership, maintenance or use of a premises by you.

This insurance does not apply to structural alterations, new construction and demolition operations performed by or for such additional insured person(s) or organization(s).

F. Controlling Interest

1) Any person(s) or organization(s) with respect to their liability arising out of:
   a. Their financial control of you; or
   b. Premises they own, maintain or control while you lease or occupy these premises.
2) This insurance does not apply to structural alterations, new construction and demolition operations performed by or for that person or organization.

G. Co-owner Of Insured Premises

Any person(s) or organization(s) with respect to their liability as co-owner of a premises coowned by you and covered under this insurance.

H. Executors, Administrators, Trustees Or Beneficiaries

Any executor, administrator, trustee or beneficiary of your estate or living trust while acting within the scope of their duties as such.

I. State Or Governmental Agency Or Subdivision Or Political Subdivision - Permits Or Authorizations Relating To Premises

Any state or governmental agency or subdivision or political subdivision, subject to the following additional provision:

This insurance applies only with respect to the following hazards for which the state or governmental agency or subdivision or political subdivision has issued a permit or authorization in connection with premises you own, rent or control and to which this insurance applies:

1) The existence, maintenance, repair, construction, erection or removal of advertising signs, awnings, canopies, cellar entrances, coal holes, driveways, manholes, marquees, hoist away openings, sidewalk vaults, street banners or decorations and similar exposures; or
2) The construction, erection or removal of elevators; or
3) The ownership, maintenance or use of any elevators covered by this insurance.

J. Any Person Or Organization You Are Performing Work For

Any person(s) or organization(s) with respect to liability for "bodily injury", "property damage" or "personal and advertising injury" caused, in whole or in part, by your acts or omissions or the acts or omissions of those acting on your behalf:

1) In the performance of your ongoing operations; or
2) In connection with your premises owned by or rented to you.

K. Vendors

1) Any person(s) or organization(s) (referred to throughout this endorsement as vendor), but only with respect to liability for "bodily injury" or "property damage" arising out of "your products" which are distributed or sold in the regular course of the vendor's business.

   However:

   a. The insurance afforded to such vendor only applies to the extent permitted by law; and

Includes copyrighted material of Insurance Services Office, Inc., with its permission.

b. If coverage provided to the vendor is required by a contract or agreement, the insurance afforded to such vendor will not be broader than that which you are required by the contract or agreement to provide for such vendor.

2) With respect to the insurance afforded to these vendors, the following additional exclusions apply:

a. The insurance afforded the vendor does not apply to:

1) "Bodily injury" or "property damage" for which the vendor is obligated to pay damages by reason of the assumption of liability in a contract or agreement. This exclusion does not apply to liability for damages that the vendor would have in the absence of the contract or agreement;

2) Any express warranty unauthorized by you;

3) Any physical or chemical change in the product made intentionally by the vendor;

4) Repackaging, except when unpacked solely for the purpose of inspection, demonstration, testing, or the substitution of parts under instructions from the manufacturer, and then repackaged in the original container;

5) Any failure to make such inspections, adjustments, tests or servicing as the vendor has agreed to make or normally undertakes to make in the usual course of business, in connection with the distribution or sale of the products;

6) Demonstration, installation, servicing or repair operations, except such operations performed at the vendor's premises in connection with the sale of the product;

7) Products which, after distribution or sale by you, have been labeled or relabeled or used as a container, part or ingredient of any other thing or substance by or for the vendor; or

8) "Bodily injury" or "property damage" arising out of the sole negligence of the vendor for its own acts or omissions or those of its employees or anyone else acting on its behalf. However, this exclusion does not apply to:

(1) The exceptions contained in Subparagraphs d. or f.; or

(2) Such inspections, adjustments, tests or servicing as the vendor has agreed to make or normally undertakes to make in the usual course of business, in connection with the distribution or sale of the products.

b. This insurance does not apply to any insured person or organization, from whom you have acquired such products, or any ingredient, part or container, entering into, accompanying or containing such products.

L. Grantor of Franchise

Any person(s) or organization(s) with respect to their liability as grantor of a franchise to you.

However:

1. The insurance afforded to such additional insureds only applies to the extent permitted by law; and
2. If coverage provided to the additional insured is required by a contract or agreement, the insurance afforded to such additional insured will not be broader than that which you are required by the contract or agreement to provide for such additional insured.

With respect to the insurance afforded to these additional insureds, the following is added to **Section III - Limits Of Insurance**:

If coverage provided to the additional insured is required by a contract or agreement, the most we will pay on behalf of the additional insured is the amount of insurance:

1. Required by the contract or agreement; or
2. Available under the applicable limits of insurance;

whichever is less.

This endorsement shall not increase the applicable limits of insurance.

If there is any difference in coverage afforded to an additional insured in this endorsement and

Includes copyrighted material of Insurance Services Office, Inc., with its permission.

that provided under another additional insured endorsement attached to this policy, the broader coverage will apply to that additional insured.

2. **Primary And Noncontributory Insurance**

   The following is added to the Other Insurance Condition and supersedes any provision to the contrary:

   This insurance is primary to and will not seek contribution from any other insurance available to an additional insured under your policy provided that:

   (1) The additional insured is a Named Insured under such other insurance; and

   (2) You have agreed in writing in a contract or agreement that this insurance would be primary and would not seek contribution from any other insurance available to the additional insured.

3. **Waiver Of Transfer Of Rights Of Recovery Against Others To Us (Waiver Of Subrogation) - Automatic**

   The following is added to Paragraph **8. Transfer Of Rights Of Recovery Against Others To Us** of **Section IV - Conditions:**

   We waive any right of recovery against any person or organization, because of any payment we make under this Coverage Part, to whom the insured has waived its right of recovery in a written contract or agreement. Such waiver by us applies only to the extent that the insured has waived its right of recovery against such person or organization prior to loss.

Includes copyrighted material of Insurance Services Office, Inc., with its permission.