SUBJECT: **PREQUALIFICATION FOR CURED-IN-PLACE PIPE (CIPP)**

BID #: RFQ-0037-13 OPEN DATE: **2013-03-27**

GENERAL GOVERNMENT AWARDS COMMITTEE

KIND AND BASIS OF CONTRACT:
CONSTRUCTION SUPPLY – FROM CONTRACT DATE THROUGH SEPTEMBER 30, 2014, WITH TWO (2) TWO (2) YEAR RENEWAL OPTIONS

AGENCY: **PUBLIC WORKS**

BASIS OF AWARD: **PRE-QUALIFICATIONS**

NUMBER OF BIDS INVITED: **3** NUMBER RECEIVED: **3** OTHER: **0**

SUMMARY OF BIDS AND RECOMMENDED ACTIONS:
Recommend approval of award to Layne Inliner, LLC., as the lowest responsive, responsible bidder in the total base bid amount of $559,961.00 for Sites #1 - #7 (Bid Date 2-21-18).

Funding for this award to be encumbered by accounts PWGM461SW-03410 and PWGM462SW-06505-PW0072-01, to be executed by Purchase Order.

Attachments: Recommendation Memo, Tabulation Sheet, Vendor Response, Contract Terms, Previous Award

Analyst: _____ CHELSEY FLEMING

RESPECTFULLY SUBMITTED: _____ GREGORY PEASE, CHIEF PROCUREMENT DIVISION

CONCURRENCE BY: STEVE D. LONG, JR., P.E., CHIEF, RIGHT OF WAY AND STORMWATER MAINT. DIVISION

(ALL AWARD ACTIONS SUBJECT TO LAWFULLY APPROPRIATED FUNDS)
ACTION OF GGAC COMMITTEE ON RECOMMENDATIONS ABOVE

MEMBERS APPROVING _____ MEMBERS DISAPPROVING _____ DATE: _____

_____ _____ OTHER: _____

_____ _____

_____ _____

ACTION OF AWARDING AUTHORITY DATE _____

APPROVED _____ DISAPPROVED _____

OTHER _____

SIGNATURE OF AUTHENTICATION _____

City of Jacksonville, Florida

Lenny Curry, Mayor

Department of Public Works
Right of Way & Stormwater Maintenance Division
609 St. Johns Bluff Road
Jacksonville, FL 32225
(904) 472-2900
www.coj.net

ONE CITY. ONE JACKSONVILLE.

February 22, 2018

MEMORANDUM

TO: Greg Pease, Chief,
Procurement Division

THRU: John P. Pappas P.E., Director of Public Works

FROM: Steven D. Long Jr., P.E. Chief
Right of Way and Stormwater Maintenance Division

RE: **RECOMMENDATION TO AWARD**
Cured-In-Place Pipe (CIPP) Bid Date 2-21-18 (Sites 1-7)

BID No.: **RFQ-0037-13**
Received Date: February 21, 2018
Award Amount: $559,961.00

Please be advised that the Right of Way and Stormwater Maintenance Division of the Department of Public Works has reviewed bids on the above-referenced contract and determined that Layne Inliner, LLC., 2531 Jewett Lane, Sanford Fl. 32771, submitted the lowest qualified responsive bid in the amount of $559,961.00 for the above-referenced bid. There were a total of three bidders.

We, therefore, recommend the subject bid in the amount of $559,961.00 be awarded to Layne Inliner, LLC., the lowest conforming bidder. Funding should be encumbered from Right of Way and Stormwater Maintenance Division account PWGM461SW-03410 and PWGM462SW06505-PW0072-01.

If you require any additional information, you may contact Robert Young at 255-4294.

SL: ry

cc: Ann Brackin, Public Works
Chelsey Fleming, Procurement
Dan Pearson, Procurement
Teresa Otto, RoWSM
Robert Young, RowSM

BID TABULATION SHEET

TITLE: CURED-IN-PLACE PIPE LINING BID NO. RFQ-0037-13 - SITES #1-7 OPEN DATE: FEBRUARY 21, 2018 @ 2:00 P.M. ANALYST: CHELSEY FLEMING No. Invited: (3) No. Received (3) No Bids: (0)			Insituform Technologies, Inc.	Lanzo Lining Services, Inc.	Layne Inliner
BID ITEMS					
SITE #1	Location: 4485 FERN CREEK RD.				
1	CURED-IN-PLACE LINER (ASTM F1216)	LS	$ 257,400.00	$ 239,380.00	$ 308,385.00
2	POINT REPAIR (under pavement)	EA	$ 1.00	$ 100.00	$ 100.00
	TOTAL BASE BID FOR SITE #1		$ 257,401.00	$ 239,480.00	$ 308,485.00
SITE #2	Location: 2136 CESERY BLVD.				
1	CURED-IN-PLACE LINER (ASTM F1216)	LS	$ 49,100.00	$ 53,136.00	$ 32,400.00
2	POINT REPAIR (natural ground)	EA	$ 1.00	$ 7,070.00	$ 100.00
	TOTAL BASE BID FOR SITE #2		$ 49,101.00	$ 60,206.00	$ 32,500.00
SITE #3	Location: 8148 PARKRIDGE CIRCLE N.				
1	CURED-IN-PLACE LINER (ASTM F1216)	LS	$ 89,460.00	$ 110,852.00	$ 67,536.00
2	POINT REPAIR (under pavement)	EA	$ 1.00	$ 100.00	$ 100.00
3	POINT REPAIR (natural ground)	EA	$ 1.00	$ 100.00	$ 100.00
	TOTAL BASE BID FOR SITE #3		$ 89,462.00	$ 111,052.00	$ 67,736.00
SITE #4	Location: 9556 HISTORIC KINGS RD S.				
1	CURED-IN-PLACE LINER (ASTM F1216)	LS	$ 81,550.00	$ 102,099.00	$ 60,286.00
2	POINT REPAIR (under pavement)	EA	$ 1.00	$ 100.00	$ 100.00
3	POINT REPAIR (natural ground)	EA	$ 1.00	$ 100.00	$ 100.00
	TOTAL BASE BID FOR SITE #4		$ 81,552.00	$ 102,299.00	$ 60,486.00
SITE #5	Location: WATER OAK LANE @ SUSSEX AVE.				
1	CURED-IN-PLACE LINER (ASTM F1216)	LS	$ 16,100.00	$ 22,720.00	$ 13,584.00
2	POINT REPAIR (natural ground)	EA	$ 1.00	$ 100.00	$ 100.00
	TOTAL BASE BID FOR SITE #5		$ 16,101.00	$ 22,820.00	$ 13,684.00
SITE #6	Location: HUNTINGTON WOODS CIRCLE N.				
1	CURED-IN-PLACE LINER (ASTM F1216)	LS	$ 21,960.00	$ 30,010.00	$ 17,000.00
2	POINT REPAIR (under pavement)	EA	$ 1.00	$ 100.00	$ 100.00
3	POINT REPAIR (natural ground)	EA	$ 1.00	$ 100.00	$ 100.00
	TOTAL BASE BID FOR SITE #6		$ 21,962.00	$ 30,210.00	$ 17,200.00
SITE #7	Location: 5958 SOLOMAN RD.				
1	CURED-IN-PLACE LINER (ASTM F1216)	LS	$ 83,550.00	$ 89,097.00	$ 59,670.00
2	POINT REPAIR (under pavement)	EA	$ 1.00	$ 100.00	$ 100.00
3	POINT REPAIR (natural ground)	EA	$ 1.00	$ 100.00	$ 100.00
	TOTAL BASE BID FOR SITE #7		$ 83,552.00	$ 89,297.00	$ 59,870.00
	TOTAL BASE BID FOR SITES (#1 - #7)		$ 599,131.00	$ 655,364.00	$ 559,961.00
	CONFLICT OF INTEREST:		YES	NO	YES
	ADDENDUM(S): ( ) ACKNOWLEDGED:		N/A	N/A	N/A

CURED-IN-PLACE PIPE (CIPP) LINING
JOB SITE SPECIFICATIONS, INVITATION TO BID AND BID FORM
Bid Date 2-21-18 Site Visit Date 2-07-2018

SITE #1: **LOCATION: 4485 Fern Creek Road**

APPROXIMAT SIZE (Dia): 48x76 (IN.) TYPE: RCP APPROXIMATE LENGTH: 290 (FT.)
APPROXIMAT SIZE (Dia): 48x76 (IN.) TYPE: RCP APPROXIMATE LENGTH: 205 (FT.)
SEE ATTACHED DRAWING
Note:
BID ITEMS:

CURED-IN-PLACE LINER (ASTM F1216)	LS	$ 308,385.00
POINT REPAIR (under pavement)	EA	$ 100.00
TOTAL BID SITE #1 =		$ 308,485.00

SITE #2: **LOCATION: 2135 Cesery Boulevard**

APPROXIMAT SIZE (Dia): 42 (IN.) TYPE: CMP APPROXIMATE LENGTH: 162 (FT.)
SEE ATTACHED DRAWING
Note: No Video provided to bidders. Site is at th back of school property. Watch for children.
BID ITEMS:

CURED-IN-PLACE LINER (ASTM F1216)	LS	$ 32,400.00
POINT REPAIR (natural ground)	EA	$ 100.00
TOTAL BID SITE #2 =		$ 32,500.00

SITE #3: **LOCATION: 8148 Parkridge Circle North**

APPROXIMAT SIZE (Dia): 21 (IN.) TYPE: CMP APPROXIMATE LENGTH: 244 (FT.)
APPROXIMAT SIZE (Dia): 24 (IN.) TYPE: CMP APPROXIMATE LENGTH: 159 (FT.)
APPROXIMAT SIZE (Dia): 21 (IN.) TYPE: CMP APPROXIMATE LENGTH: 289 (FT.)
APPROXIMAT SIZE (Dia): 21 (IN.) TYPE: CMP APPROXIMATE LENGTH: 80 (FT.)
APPROXIMAT SIZE (Dia): 18 (IN.) TYPE: CMP APPROXIMATE LENGTH: 44 (FT.)
SEE ATTACHED DRAWING
Note: No video provided to bidders
BID ITEMS:

CURED-IN-PLACE LINER (ASTM F1216)	LS	$ 67,536.00
POINT REPAIR (under pavement)	EA	$ 100.00
POINT REPAIR (natural ground)	EA	$ 100.00
TOTAL BID SITE #3 =		$ 67,736.00

SITE #4: **LOCATION: 9555 Historic Kings Road South**

APPROXIMAT SIZE (Dia): 24 (IN.) TYPE: RCP APPROXIMATE LENGTH: 160 (FT.)
APPROXIMAT SIZE (Dia): 24 (IN.) TYPE: RCP APPROXIMATE LENGTH: 155 (FT.)
APPROXIMAT SIZE (Dia): 24 (IN.) TYPE: RCP APPROXIMATE LENGTH: 11 (FT.)
APPROXIMAT SIZE (Dia): 24 (IN.) TYPE: RCP APPROXIMATE LENGTH: 375 (FT.)
SEE ATTACHED DRAWING
Note: No video provided to bidders. Property owner to be contacted prior to mobilizing to site. All latteral taps are to be cut out 3rd segment has an 8" sewer conflict in MH to be addressed by bidder.
BID ITEMS:

CURED-IN-PLACE LINER (ASTM F1216)	LS	$ 60,286.00
POINT REPAIR (under pavement)	EA	$ 100.00
POINT REPAIR (natural ground)	EA	$ 100.00
TOTAL BID SITE #4 =		$ 60,486.00

CURED-IN-PLACE PIPE (CIPP) LINING
JOB SITE SPECIFICATIONS, INVITATION TO BID AND BID FORM
Bid Date 2-21-18 Site Visit Date 2-07-2018

SITE #5: LOCATION: Water Oak Lane @ Sussex Avenue
APPROXIMAT SIZE (Dia): *30x48* (IN.) TYPE: *RCP* APPROXIMATE LENGTH: *16* (FT.)
SEE ATTACHED DRAWING
Note:No Video provided for this site. This site is tidal Vinyl fence may need to be removed and reinstalled.
BID ITEMS:

CURED-IN-PLACE LINER (ASTM F1216)	LS	$ 13,584.00
POINT REPAIR (natural ground)	EA	$ 100.00
TOTAL BID SITE #5 =		$ 13,684.00

SITE #6: LOCATION: Huntington Woods Circle North
APPROXIMAT SIZE (Dia): *14x23* (IN.) TYPE: *RCP* APPROXIMATE LENGTH: *43* (FT.)
APPROXIMAT SIZE (Dia): *14x23* (IN.) TYPE: *RCP* APPROXIMATE LENGTH: *127* (FT.)
SEE ATTACHED DRAWING
Note: Video of existing pipe conditions provided to bidders.
BID ITEMS:

CURED-IN-PLACE LINER (ASTM F1216)	LS	$ 17,000.00
POINT REPAIR (under pavement)	EA	$ 100.00
POINT REPAIR (natural ground)	EA	$ 100.00
TOTAL BID SITE #6 =		$ 17,200.00

SITE #7: LOCATION: 5958 Solomon Road
APPROXIMAT SIZE (Dia): *60* (IN.) TYPE: *RCP* APPROXIMATE LENGTH: *51* (FT.)
APPROXIMAT SIZE (Dia): *60* (IN.) TYPE: *RCP* APPROXIMATE LENGTH: *51* (FT.)
SEE ATTACHED DRAWING
Note: No Video provided for this site. No city water source on site.
BID ITEMS:

CURED-IN-PLACE LINER (ASTM F1216)	LS	$ 59,670.00
POINT REPAIR (under pavement)	EA	$ 100.00
POINT REPAIR (natural ground)	EA	$ 100.00
TOTAL BID SITE #7 =		$ 59,870.00

TOTAL BASE BID FOR SITES (#1- #7) $ 559,961.00

CURED-IN-PLACE PIPE (CIPP) LINING
JOB SITE SPECIFICATIONS, INVITATION TO BID AND BID FORM
Bid Date 2-21-18 Site Visit Date 2-07-2018

Comments: 1) Refer to attached Site Visit(s) sign in sheet.
2) ESTIMATED GROUNDWATER TABLE ELEVATION FOR ALL SITES IS ONE FOOT.
3) Design Parameters, specific resin system, site condition and minimum CIPP design thickness will be required for each site as part of the bid submittal.
4) All concrete or debris shall be removed from the pipes and structures to provide positive flow and a minimum of 10% reduction of ovality/ cross-sectional area.

TIME IS OF THE ESSENCE. It is mutually agreed among the parties that the subject work shall be completed within 90Calendar days after the issue date of the Purchase Order.

Award will be by total base bid for ALL sites to the lowest responsive, responsible bidder.
All awards are subject to the availability of funds.

It is the Contractor's responsibility to verify pipe size and length prior to manufacturing the liner. The liner will be structural unless otherwise instructed in writing by the project engineer. Point repairs are to be a contingency item, however, they will be included in the total base bid in determining the low bidder. The Contractor's Bid lump sum(LS) for the liner and lump sum(LS) for each point repair is to be sealed and submitted to the address below on the proper form. It is understood that the Contractor may perform any number of point repairs on any job site(s) at the unit price submitted.

Please consider this as an invitation to submit a bid on this project. Sealed bids are to be submitted to the below-specified address on or before 2:00 p.m.on Wednesday, the *21st* Day of February 2018 Bidders are fully responsible for delivery of bids; Reliance on mail or public carrier is at bidder's risk. **LATE BIDS WILL NOT BE CONSIDERED**

Sealed Bids submitted to: **City of Jacksonville**
Procurement Division
Ed Ball Building, 1st Floor
214 N. Hogan Street, Suite 105
Jacksonville, Fl. 32202

CURED-IN-PLACE PIPE (CIPP) LINING
JOB SITE SPECIFICATIONS, INVITATION TO BID AND BID FORM
Bid Date 2-21-18 Site Visit Date 2-07-2018

This document is issued pursuant to those certain prequalification specifications, identified as RFQ-0037-13 for the reconstruction of existing storm drain pipe lines and conduits by the installation of cured-in-place pipe (F1216), and pursuant to those certain contracts for Storm Sewer Rehabilitation by Cured-in-Place Pipe Technology, by and between the City of Jacksonville and Insituform Technologies, LLC, Layne Inliner, LLC, and Lanzo Trenchless Technologies, respectively. Said Request for Qualifications (R.F.Q.) and contracts are on file in the Office of the Right of Way and Grounds Maintenance, Chief and, by this reference, are made a part hereof as if set out in their entirety.

The undersigned Bidder certifies that this proposal is made in good faith, without collusion or connection with any other entity bidding on the work.

The undersigned Bidder certifies that no officer or agent of the City will directly or indirectly benefit from this bid, as evidence by the Conflict of Interest Form attached here to.

The undersigned Bidder states that all applicable taxes are included in the lump sum bid, for each site, and that the CONTRACTOR acknowledges that the work at the job sites are not exempt from the State or Local Sales or Use taxes, and payment of such taxes is the responsibility of the Bidder.

The undersigned Bidder agrees to keep its bid in effect for 120 calendar days after the Bid Opening date to allow the CITY time to award the bid, should it be awarded. This time period begins at the time bids are opened and ends upon the issuance of Notice to Proceed (NTP) which will be in the form of a Purchase Order (PO) from the CITY. The bid prices shall remain in effect throughout the life of the Contract. Failure of the CITY to issue a PO within the specified time period shall allow Bidder to withdraw its Bid and terminate its contract without penalty. Failure of the CITY to issue a PO within the specified time period shall not entitle Bidder to an adjustment of its Bid prices, unless mutually agreeable by the CITY.

The undersigned Bidder acknowledges that included in the various items of the proposal and in the total bid price are costs for complying with the Florida Trench Safety Act and Occupational Safety and Health Administration's Safety Standards for Confined Space Entry.

The undersigned Bidder certifies, under penalty of perjury and contract rescission, that it has all required licenses to perform the work required to fulfill the terms of the contract resulting from a successful bid. Furthermore, the undersigned Bidder affirms that all subcontractors requiring to be licensed are properly licensed to perform work on their respective portions of this project.

NAME OF BIDDER (Print) LAYNE INLINER, LLC If Corporation, affix Corporate Seal

ORIGINAL SIGNATURE _____ TITLE DISTRICT MANAGER

Corporate Representative
MICHAEL CANNON

(EXHIBIT No. 4)

CONFLICT OF INTEREST CERTIFICATE

RFQ-0037-13

Bidder must execute either Section I or Section II hereunder relative to Florida Statute 112.313(12). Failure to execute either Section may result in rejection of this bid proposal.

SECTION I

I hereby certify that no official or employee of the City or independent agency requiring the goods or services described in these specifications has a material financial interest in this company.

Signature

MICHAEL CANNON DISTRICT MANAGER
Name of Official (Type or Print)

LAYNE INLINER, LLC
Company Name

2531 JEWETT LANE
Business Address

SANFORD, FL 32771
City, State, Zip Code

SECTION II

I hereby certify that the following named City official(s) and employee(s) having material financial interest(s) (in excess of 5%) in this company have filed Conflict of Interest Statements with the Supervisor of Elections, 105 East Monroe Street, Jacksonville, Duval County Florida, prior to bid opening.

Name	Title or Position	Date of Filing

Signature

Company Name

Name of Official (Type or Print)

Business Address

City, State, Zip Code

PUBLIC OFFICIAL DISCLOSURE

Section 126.112 of the Purchasing Code requires that a public official who has a financial interest in a bid or contract make a disclosure at the time that the bid or contract is submitted or at the time that the public official acquires a financial interest in the bid or contract. Please provide disclosure, if applicable, with bid.

Public Official _____

Position Held _____

Position or Relationship with Bidder _____

Project ID:	Jacksonville 2-21-18
Segment ID:	48x76" ERCP x 205/290LF
Location:	4485 Fern Creek Drive
Designed By/Date:	TR 2-16-18
Approved By/Date:	

CIPP Thickness Design by ASTM F1216-16 for Gravity Flow Pipelines

Design Criteria

Pipe Condition:	Fully Deteriorated
Nominal Pipe Diameter:	63.5 inches
Maximum Ovality:	22.0 %
External Groundwater, to Invert:	10.5 feet
Soil Cover, to top of pipe:	6.5 feet
Factor of Safety:	2.0
Soil Modulus:	1000 psi
Soil Density:	120 lbs/ft³
Live Loading:	HS-20 Highway - Two Trucks Passing

CIPP Liner Properties

Short-term Flexural Modulus:	400,000 psi
Short Term Flexural Strength:	4,500 psi
Property Retention Factor for Long-Term Design:	50 %
Long-term Flexural Modulus:	200,000 psi
Long-term Flexural Strength:	2,250 psi

Ovality Exceeds 10% - Alternative Design May Be Recommended (see Note #10)

ASTM F1216 Equation Solutions

Resistance to Hydrostatic Loads:	1.69 in	or	43.0 mm
Bending Stress in Ovalized Pipes:	2.49 in	or	63.1 mm
Soil, Water and Live Loads:	1.71 in	or	43.5 mm
Minimum Stiffness Requirements:	0.89 in	or	22.7 mm

Design Case

Fully Deteriorated

Required Installed Thickness: 2.49 in or 63.1 mm = 26 DR

Design Parameter Sketch

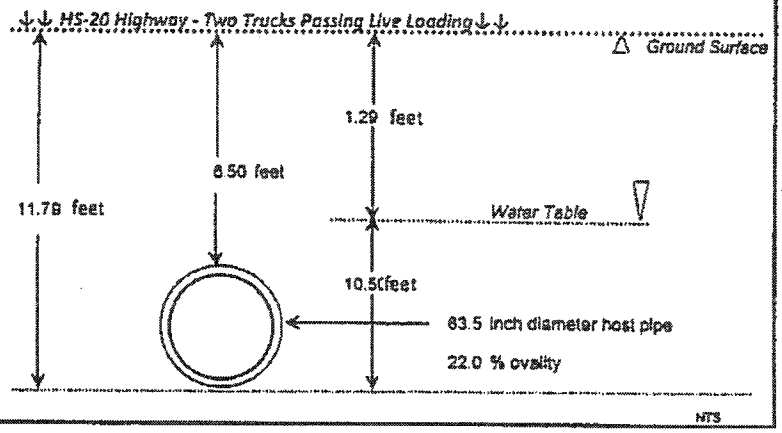

PE Stamp

Signature

Date

Comments / Assumptions

These calculations have been prepared using accepted engineering principles for the design of underground piping systems. They are based on the information provided in the contract documents with assumptions noted.

Rev 1 - 10-10-15

This design software was prepared for the sole use of Inliner Technologies LLC and its certified licensed installers.

Project ID:	Jacksonville 2-21-18
Segment ID:	42inch CMP x 162LF
Location:	2138 Cesery Blvd
Designed By/Date:	TR 2-16-18
Approved By/Date:	

CIPP Thickness Design by ASTM F1216-16 for Gravity Flow Pipelines

Design Criteria

Pipe Condition:	Fully Deteriorated
Nominal Pipe Diameter:	42.0 inches
Maximum Ovality:	2.0 %
External Groundwater, to invert:	7.5 feet
Soil Cover, to top of pipe:	4.0 feet
Factor of Safety:	2.0
Soil Modulus	1000 psi
Soil Density:	120 lbs/ft³
Live Loading:	HS-20 Highway - Single-Wheel Load

CIPP Liner Properties

Short-term Flexural Modulus:	400,000 psi
Short Term Flexural Strength:	4,500 psi
Property Retention Factor for Long-Term Design:	50 %
Long-term Flexural Modulus:	200,000 psi
Long-term Flexural Strength:	2,250 psi

ASTM F1216 Equation Solutions

Resistance to Hydrostatic Loads	0.56 in	or	14.3 mm
Bending Stress in Ovalized Pipes	0.37 in	or	9.3 mm
Soil, Water and Live Loads	0.56 in	or	14.2 mm
Minimum Stiffness Requirements	0.59 in	or	15.0 mm

Design Case

Fully Deteriorated

Required Installed Thickness: 0.59 in or 15.0 mm = 71 DR

Design Perimeter Sketch

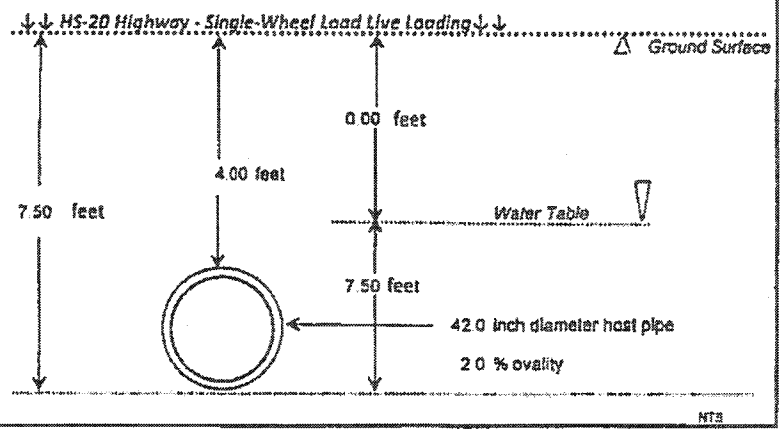

PE Stamp

Signature

Date

Comments / Assumptions

These calculations have been prepared using accepted engineering principles for the design of underground piping systems. They are based on the information provided in the contract documents with assumptions noted.

Rev 1 - 10-10-16

This design software was prepared for the sole use of Inliner Technologies LLC and its certified licensed installers.

Project ID:	Jacksonville 2-21-18
Segment ID:	24inch CMP x 150LF
Location:	8148 Parkridge Circle North
Designed By/Date:	TR 2-18-18
Approved By/Date:	

CIPP Thickness Design by ASTM F1216-16 for Gravity Flow Pipelines

Design Criteria

Pipe Condition:	Fully Deteriorated
Nominal Pipe Diameter:	24.0 inches
Maximum Ovality:	2.0 %
External Groundwater, to invert:	3.5 feet
Soil Cover, to top of pipe:	1.5 feet
Factor of Safety:	2.0
Soil Modulus:	1000 psi
Soil Density:	120 lbs/ft^3
Live Loading:	HS-20 Highway - Single-Wheel Load

CIPP Liner Properties

Short-term Flexural Modulus:	400,000 psi
Short Term Flexural Strength:	4,500 psi
Property Retention Factor for Long-Term Design:	50 %
Long-term Flexural Modulus:	200,000 psi
Long-term Flexural Strength:	2,250 psi

ASTM F1216 Equation Solutions

Resistance to Hydrostatic Loads:	0.25 in	or	6.4 mm
Bending Stress in Ovalized Pipes:	0.15 in	or	3.7 mm
Soil, Water and Live Loads:	0.67 in	or	17.1 mm
Minimum Stiffness Requirements:	0.34 in	or	8.6 mm

Design Case

Fully Deteriorated

Required Installed Thickness: 0.67 in or 17.1 mm = 36 DR

Design Parameter Sketch

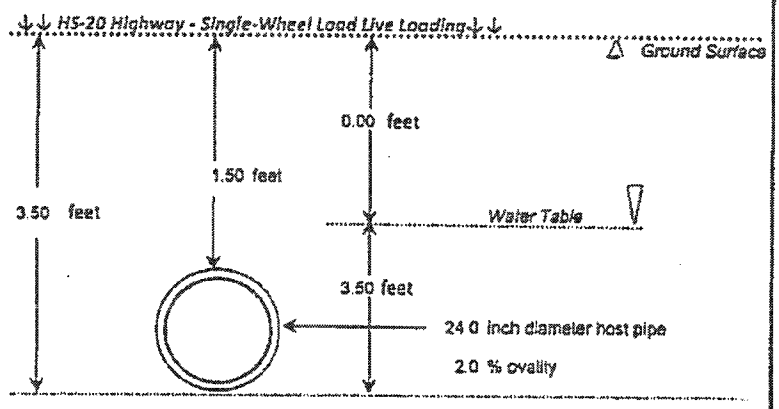

PE Stamp

Signature

Date

Comments / Assumptions

These calculations have been prepared using accepted engineering principles for the design of underground piping systems. They are based on the information provided in the contract documents with assumptions noted.

Rev 1 - 10-10-16

This design software was prepared for the sole use of Inliner Technologies LLC and its certified licensed installers.

Project ID:	Jacksonville 2-21-18
Segment ID:	21inch CMP x 244/289/80LF
Location:	6148 Parkridge Circle North
Designed By/Date:	TR 2-18-18
Approved By/Date:	

CIPP Thickness Design by ASTM F1216-16 for Gravity Flow Pipelines

Design Criteria

Pipe Condition:	Fully Deteriorated
Nominal Pipe Diameter:	21.0 inches
Maximum Ovality:	2.0 %
External Groundwater, to invert:	3.5 feet
Soil Cover, to top of pipe:	1.8 feet
Factor of Safety:	2.0
Soil Modulus:	1000 psi
Soil Density:	120 lbs/ft³
Live Loading:	HS-20 Highway - Single-Wheel Load

CIPP Liner Properties

Short-term Flexural Modulus:	400,000 psi
Short Term Flexural Strength:	4,500 psi
Property Retention Factor for Long-Term Design:	50 %
Long-term Flexural Modulus:	200,000 psi
Long-term Flexural Strength:	2,250 psi

ASTM F1216 Equation Solutions

Resistance to Hydrostatic Loads	0.22 in	or	5.6 mm
Bending Stress in Ovalized Pipes	0.13 in	or	3.2 mm
Soil, Water and Live Loads	0.51 in	or	13.1 mm
Minimum Stiffness Requirements	0.30 in	or	7.5 mm

Design Case

Fully Deteriorated

Required Installed Thickness: 0.51 in or 13.1 mm = 41 DR

Design Parameter Sketch

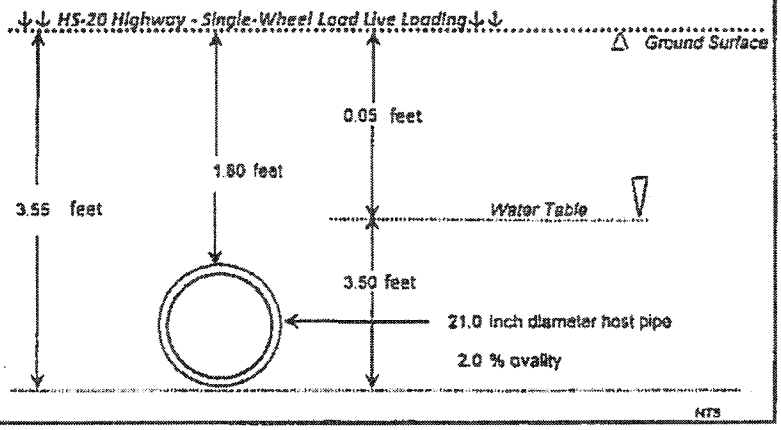

PE Stamp

Signature

Date

Comments / Assumptions

These calculations have been prepared using accepted engineering principles for the design of underground piping systems. They are based on the information provided in the contract documents with assumptions noted.

Rev 1 - 10-10-16

This design software was prepared for the sole use of Inliner Technologies LLC and its certified licensed installers.

Project ID:	Jacksonville 2-21-18
Segment ID:	18inch CMP x 44LF
Location:	8148 Parkridge Circle North
Designed By/Date:	TR 2-15-18
Approved By/Date:	

CIPP Thickness Design by ASTM F1216-16 for Gravity Flow Pipelines

Design Criteria

Pipe Condition	Fully Deteriorated
Nominal Pipe Diameter:	18.0 inches
Maximum Ovality:	2.0 %
External Groundwater, to invert:	3.5 feet
Soil Cover, to top of pipe:	2.0 feet
Factor of Safety:	2.0
Soil Modulus:	1000 psi
Soil Density:	120 lbs/ft^3
Live Loading	HS-20 Highway - Single-Wheel Load

CIPP Liner Properties

Short-term Flexural Modulus:	400,000 psi
Short Term Flexural Strength:	4,500 psi
Property Retention Factor for Long-Term Design:	50 %
Long-term Flexural Modulus:	200,000 psi
Long-term Flexural Strength:	2,250 psi

ASTM F1216 Equation Solutions

Resistance to Hydrostatic Loads:	0.19 in	or	4.8 mm
Bending Stress in Ovalized Pipes	0.11 in	or	2.8 mm
Soil, Water and Live Loads	0.40 in	or	10.1 mm
Minimum Stiffness Requirements	0.25 in	or	6.4 mm

Design Case

Fully Deteriorated

Required Installed Thickness: 0.40 in or 10.1 mm = 45 DR

Design Parameter Sketch

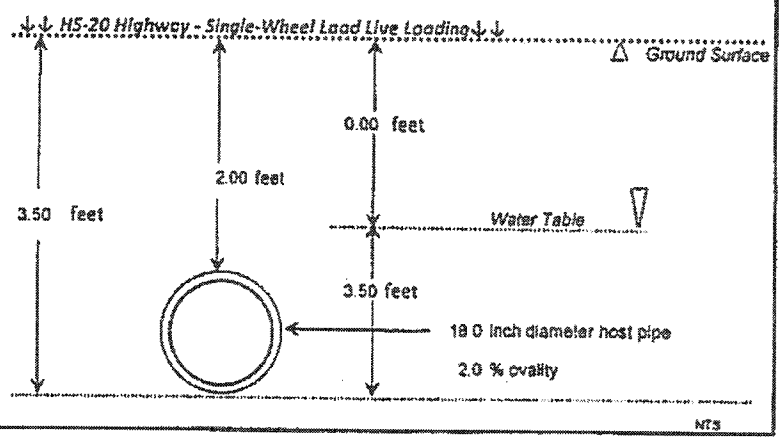

PE Stamp

Signature

Date

Comments / Assumptions

These calculations have been prepared using accepted engineering principles for the design of underground piping systems. They are based on the information provided in the contract documents with assumptions noted

Rev 1 - 10-10-16

This design software was prepared for the sole use of Inliner Technologies LLC and its certified licensed installers.

Project ID:	Jacksonville 2-21-18
Segment ID:	24inch RCP x 701LF
Location:	9558 Historic Kings Rd S.
Designed By/Date:	TR 2-16-18
Approved By/Date:	

CIPP Thickness Design by ASTM F1216-16 for Gravity Flow Pipelines

Design Criteria

Pipe Condition	Fully Deteriorated
Nominal Pipe Diameter	24.0 inches
Maximum Ovality	2.0 %
External Groundwater, to invert	8.0 feet
Soil Cover, to top of pipe	6.0 feet
Factor of Safety	2.0
Soil Modulus	1000 psi
Soil Density	120 lbs/ft^3
Live Loading	HS-20 Highway - Single-Wheel Load

CIPP Liner Properties

Short-term Flexural Modulus.	400,000 psi
Short Term Flexural Strength.	4,500 psi
Property Retention Factor for Long-Term Design.	50 %
Long-term Flexural Modulus.	200,000 psi
Long-term Flexural Strength.	2,250 psi

ASTM F1216 Equation Solutions

Resistance to Hydrostatic Loads	0.33 in	or	8.4 mm
Bending Stress in Ovalized Pipes	0.21 in	or	5.5 mm
Soil, Water and Live Loads	0.33 in	or	8.4 mm
Minimum Stiffness Requirements	0.34 in	or	8.6 mm

Design Case

Fully Deteriorated

Required Installed Thickness: 0.34 in or 8.6 mm = 71 DR

Design Parameter Sketch

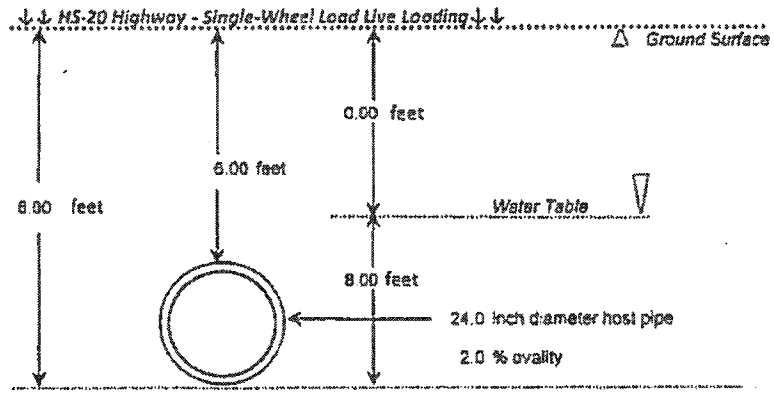

PE Stamp

Signature

Date

Comments / Assumptions

These calculations have been prepared using accepted engineering principles for the design of underground piping systems. They are based on the information provided in the contract documents with assumptions noted.

Rev 1 - 10-10-16

This design software was prepared for the sole use of Inliner Technologies LLC and its certified licensed installers.

Project ID:	Jacksonville 2-21-18
Segment ID:	30x48" ERCP x 16'
Location:	5400 Water Oak Lane
Designed By/Date:	TR 2-19-18
Approved By/Date:	

CIPP Thickness Design by ASTM F1216-16 for Gravity Flow Pipelines

Design Criteria

Pipe Condition:	Fully Deteriorated
Nominal Pipe Diameter:	39.0 inches
Maximum Ovality:	23.1 %
External Groundwater, to invert:	3.0 feet
Soil Cover, to top of pipe:	1.5 feet
Factor of Safety:	2.0
Soil Modulus:	1000 psi
Soil Density:	120 lbs/ft^3
Live Loading:	HS-20 Highway - Single-Wheel Load

CIPP Liner Properties

Short-term Flexural Modulus	400,000 psi
Short Term Flexural Strength	4,500 psi
Property Retention Factor for Long-Term Design	50 %
Long-term Flexural Modulus	200,000 psi
Long-term Flexural Strength	2,250 psi

Ovality Exceeds 10% - Alternative Design May Be Recommended (see Note #10)

ASTM F1216 Equation Solutions

Resistance to Hydrostatic Loads	0.71 in	or	18.1 mm
Bending Stress in Ovalized Pipes	0.85 in	or	21.6 mm
Soil, Water and Live Loads	1.56 in	or	39.6 mm
Minimum Stiffness Requirements	0.55 in	or	13.9 mm

Design Case

Fully Deteriorated

Required Installed Thickness: 1.56 in or 39.6 mm = 25 DR

Design Parameter Sketch

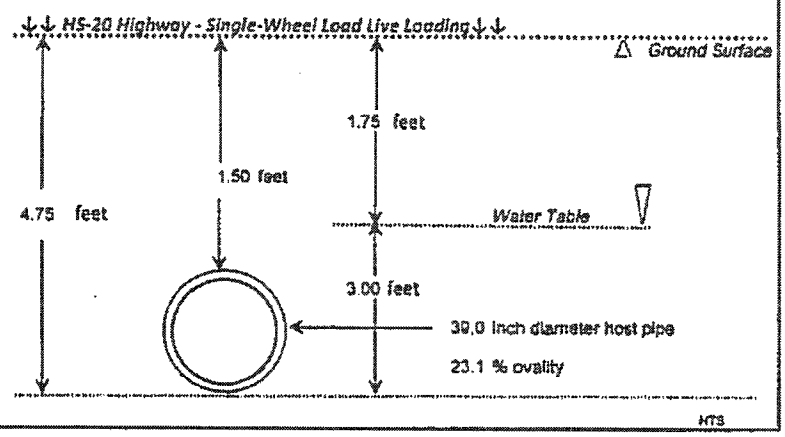

PE Stamp

Signature

Date

Comments / Assumptions

These calculations have been prepared using accepted engineering principles for the design of underground piping systems. They are based on the information provided in the contract documents with assumptions noted.

Rev 1 - 10-10-16

This design software was prepared for the sole use of Inliner Technologies LLC and its certified licensed installers.

Project ID:	Jacksonville 2-21-18
Segment ID:	14x23" ERCP x 43/127'
Location:	8778 Huntington Woods Cir N
Designed By/Date:	TR 2-18-18
Approved By/Date:	

CIPP Thickness Design by ASTM F1216-16 for Gravity Flow Pipelines

Design Criteria

Pipe Condition:	Fully Deteriorated
Nominal Pipe Diameter:	18.5 inches
Maximum Ovality:	24.3 %
External Groundwater, to invert:	2.2 feet
Soil Cover, to top of pipe	2.0 feet
Factor of Safety:	2.0
Soil Modulus:	1000 psi
Soil Density:	120 lbs/ft^3
Live Loading:	HS-20 Highway - Single-Wheel Load

CIPP Liner Properties

Short-term Flexural Modulus:	400,000 psi
Short Term Flexural Strength:	4,500 psi
Property Retention Factor for Long-Term Design:	50 %
Long-term Flexural Modulus:	200,000 psi
Long-term Flexural Strength:	2,250 psi

Ovality Exceeds 10% - Alternative Design May Be Recommended (see Note #10)

ASTM F1216 Equation Solutions

Resistance to Hydrostatic Loads	0.32 in	or	8.0 mm
Bending Stress in Ovalized Pipes	0.36 in	or	9.0 mm
Soil, Water and Live Loads	0.71 in	or	17.9 mm
Minimum Stiffness Requirements	0.26 in	or	6.6 mm

Design Case

Fully Deteriorated

Required Installed Thickness: 0.71 in or 17.9 mm = 26 DR

Design Parameter Sketch

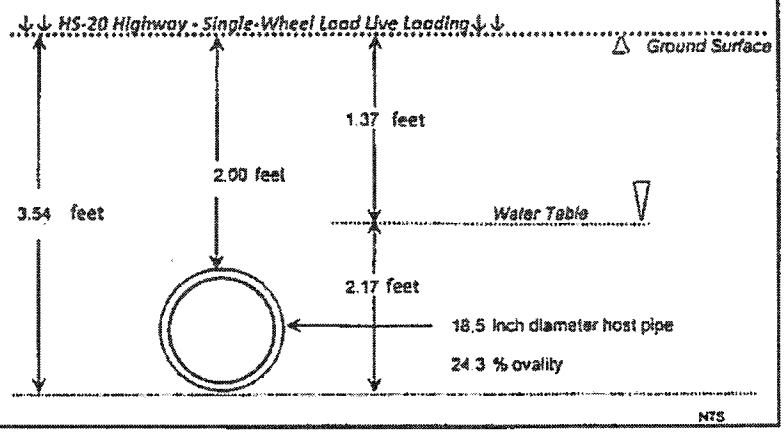

PE Stamp

Signature

Date

Comments / Assumptions

These calculations have been prepared using accepted engineering principles for the design of underground piping systems. They are based on the information provided in the contract documents with assumptions noted.

Rev 1 - 10-10-16

This design software was prepared for the sole use of Inliner Technologies LLC and its certified licensed installers.

Project ID:	Jacksonville 2-21-18
Segment ID:	60inch RCP x 51/51'
Location:	5958 Solomon Road
Designed By/Date:	TR 2-19-18
Approved By/Date:	

CIPP Thickness Design by ASTM F1216-16 for Gravity Flow Pipelines

Design Criteria

Pipe Condition:	Fully Deteriorated
Nominal Pipe Diameter:	60.0 inches
Maximum Ovality:	2.0 %
External Groundwater, to invert:	8.0 feet
Soil Cover, to top of pipe:	4.0 feet
Factor of Safety:	2.0
Soil Modulus:	1000 psi
Soil Density:	120 lbs/ft^3
Live Loading:	HS-20 Highway - Single-Wheel Load

CIPP Liner Properties

Short-term Flexural Modulus:	400,000 psi
Short Term Flexural Strength:	4,500 psi
Property Retention Factor for Long-Term Design:	50 %
Long-term Flexural Modulus:	200,000 psi
Long-term Flexural Strength:	2,250 psi

ASTM F1216 Equation Solutions

Resistance to Hydrostatic Loads:	0.82 in	or	20.9 mm
Bending Stress in Ovalized Pipes:	0.54 in	or	13.6 mm
Soil, Water and Live Loads:	0.73 in	or	18.6 mm
Minimum Stiffness Requirements:	0.84 in	or	21.5 mm

Design Case

Fully Deteriorated

Required Installed Thickness: 0.84 in or 21.5 mm = 71 DR

Design Parameter Sketch

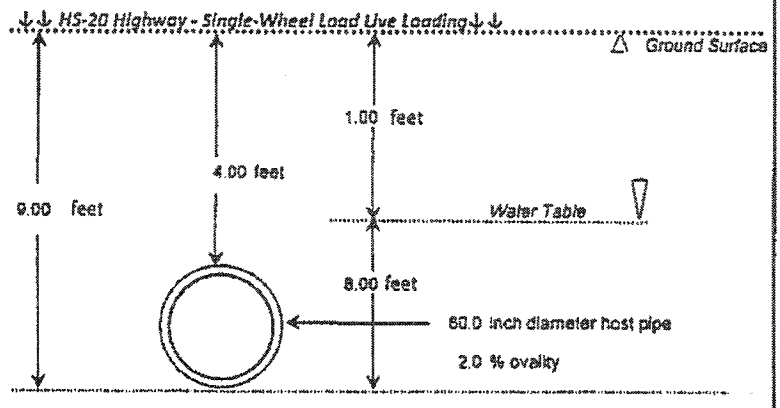

PE Stamp

Signature

Date

Comments / Assumptions

These calculations have been prepared using accepted engineering principles for the design of underground piping systems. They are based on the information provided in the contract documents with assumptions noted.

Rev 1 - 10-10-16

This design software was prepared for the sole use of Inliner Technologies LLC and its certified licensed installers.

INVITATION TO SUBMIT STATEMENT OF QUALIFICATIONS (S.O.Q.)

for

Storm Sewer Rehabilitation by Cured-In-Place (CIPP) Technology

RFQ-0037-13

Notice is hereby given that the City of Jacksonville, Florida, is requesting Statements of Bidder Qualifications for *Storm Sewer Rehabilitation by Cured-In-Place (CIPP) Technology*. The City will receive the foregoing Statements of Qualifications in the Office of the Intra-Governmental Services Department, Procurement Division, Ed Ball Building, First Floor, Suite 105, 214 N. Hogan Street, Jacksonville, Florida 32202, until 2:00 P.M. on the 27 day of March, 2013. At that time Responses will be publicly opened and recorded in the meeting room #110, 1st Floor, Ed Ball Bldg., 214 N. Hogan Street.

PROJECT SCOPE: Storm Sewer Rehabilitation by Cured-In-Place (CIPP) Technology will include the complete rehabilitation of various storm sewer pipes by Cured-In-Place (CIPP) Technology with work including, but not limited to maintenance of traffic, storm sewer segment isolation and dewatering, pipe cleaning, debris removal, haul and disposal, CCTV (Closed Circuit Television) inspection, point repair(s), written and electronic inspection documentation along with all appurtenant work necessary to accomplish a complete rehabilitation of storm sewer facilities. All work will be performed at designated locations in the City of Jacksonville and in accordance with the Contract Documents.

A Statement of Qualifications (maximum one hundred 8.5"x11" pages) shall be submitted as provided in the REQUEST FOR QUALIFICATIONS RFQ-0037-13, of which a paper copy may be obtained at the Office of Procurement Division, Ed Ball Building, Suite 105, 214 N. Hogan Street, Jacksonville, Florida 32202. The price per set of Documents is $ 40.00.

In accordance with Part 6 of the Purchasing Code and as detailed in the Specifications, this procurement has been designated to be under the ENCOURAGEMENT PLAN to provide Equal Business Opportunity to certain Jacksonville Small Emerging Business "JSEB".

The City of Jacksonville reserves the right to reject any or all Proposals, wave informalities irregularities or defects in any Proposal, make award in part or whole with or without cause, and to make the award it deems to be in the best interest of the City of Jacksonville.

PRE-BID CONFERENCE: N/A

PURPOSE FOR STATEMENT OF QUALIFICATIONS:

The purpose of this Request for Qualifications (RFQ) is to solicit Statements of Qualifications (SOQ) from Firms interested in providing construction services for Storm Sewer Rehabilitation by Cured-In-Place (CIPP) Technology. Statements of Qualifications (SOQ) shall be submitted in accordance with Section VI, contained in the documents herein. The City shall determine those contractors who have met ALL criteria identified in Section VII and those Firms will qualify to enter into contract with the City to provide competitive sealed bids for the construction services of this project, pursuant to Chapter 126.202 of the Procurement Code. Each award will be to the lowest, responsive, responsible bidder.

Gregory W. Peage, Chief
Procurement Division

Alvin Brown, Mayor
City of Jacksonville

SUBJECT: PREQUALIFICATION FOR CURED-IN-PLACE PIPE (CIPP)

BID #: RFQ-0037-13 OPEN DATE: 2013-03-27

GENERAL GOVERNMENT AWARDS COMMITTEE

KIND AND BASIS OF CONTRACT: CONSTRUCTION SUPPLY- FROM CONTRACT DATE THOUGH SEPTEMBER 30, 2014; WITH TWO (2), TWO (2) YEAR RENEWAL OPTIONS

AGENCY: PUBLIC WORKS

BASIS OF AWARD: PRE-QUALIFICATIONS

NUMBER OF BIDS INVITED: (19) NUMBER RECEIVED: (7) OTHER (0)

SUMMARY OF BIDS AND RECOMMENDED ACTIONS:
Subject bid was awarded on 04/25/13 to prequalify Insituform Technologies, LLC. (contract #5991-20), Lanzo Trenchless Technologies-South (contract #9888), and Layne Inliner, LLC. (contract #9883), in the amount of $1,000,000.00 for each contract: Increased on 07/19/13 in the amount of $1,000,000.00 for Insituform Technologies, LLC.; Increased on 07/07/14 in the amount of $1,000,000.00 to Insituform Technologies, LLC; 1st Renewal Option utilized on 08/07/14 for all three firms in the amount of $1,000,000.00; Increased on 02/11/16 in the amount of $1,000,000.00 to Insituform Technologies, LLC; Increased on 04/28/16 in the amount of $1,000,000.00 to Insituform Technologies, LLC.

Recommend approval to utilize the Second and Final Renewal Option with Insituform Technologies, Inc., for the annual expenditure amount of $1,000,000.00; Lanzo Trenchless Technologies-South in the amount of $1,000,000.00; Layne Inliner, LLC in the amount of $1,000,000.00. Revised total contact amount for each as follows: Insituform Technologies, Inc., will be $7,000,000.00; Lanzo Trenchless amount $3,000,000.00; Layne Inliner amount $3,000,000.00. Total award amount for all not-to-exceed $13,000,000.00. Period of service will be from October 1, 2016 through September 30, 2018. This award to be funded by account: PWGM462SW-06505-PW0072-01 to be executed by contract amendment(s) through Office of General Counsel- Insituform amendment #6, Lanzo amendment #2 and Layne amendment #2 and released by individual Purchase Order(s).

This award subject to appropriation by the City in the fiscal year beginning October 1, 2016. No funds have been appropriated to date. The City has no obligation for payment and work hereunder is not authorized unless funds are appropriated for work herein. A written notification will be provided in the event the funds are appropriated.

Attachments: Recommendation Memos, Vendor Letters, Contract Terms, Previous Award(s)

BUYER: Marilyn Raidler
MARILYN RAIDLER

RESPECTFULLY SUBMITTED
GREGORY PEASE, CHIEF
PROCUREMENT DIVISION

CONCURRENCE BY:

(ALL AWARD ACTIONS SUBJECT TO LAWFULLY APPROPRIATED FUNDS)
ACTION OF GGAC COMMITTEE ON RECOMMENDATIONS ABOVE

MEMBERS APPROVING 3 MEMBERS DISAPPROVING Ø DATE: 7-14-16

Teresa R. Eibner

OTHER:

James R. McCall

ACTION OF AWARDING AUTHORITY DATE 7/14/16

APPROVED ✓ DISAPPROVED

Sam E. Mousa
Chief Administrative Officer
For Mayor Lenny Curry
Under Authority of
Executive Order No. 2015-05

OTHER

SIGNATURE OF AUTHENTICATION