SUBJECT: **RFQ FOR DESIGN-BUILD SVCS FOR HORIZONTAL/CIVIL ENGINEERING PROJECTS**

BID # **CDB-0006-16** OPEN DATE: **10/21/2015**

COMPETITIVE SEALED PROPOSAL EVALUATION COMMITTEE

KIND AND BASIS OF CONTRACT:
CONSTRUCTION – DESIGN/BUILD

AGENCY: **DEPARTMENT OF PUBLIC WORKS**

BASIS OF AWARD: **QUALIFICATIONS BASED**

NUMBER OF BIDS INVITED: - NUMBER RECEIVED: - OTHER: -

SUMMARY OF BIDS AND RECOMMENDED ACTIONS:

The River Road Bridge Project Amendment 8A with J. B. Coxwell Contracting, Inc., (contract #6533-54), was awarded on 02/15/18 in the amount of $99,369.35.

Recommend approval of change order #1 to J. B. Coxwell Contracting, Inc., in the amount of $414,774.00, which includes $30,000.00 in contingency, for final design, permitting and construction. This incorporates the attached, scope and fee summary, Exhibit "J-2", with guaranteed completion of 200 days from issuance of notice-to-proceed. Total new guaranteed maximum price not-to-exceed $514,143.35.

Funding for this award is to be encumbered by account(s): PWCP32ERD549-069505-PW0866-01 to be executed by contract Amendment 8B through Office of General Counsel.

Attachments: Recommendation Memo, Exhibit "J-2", Previous Award(s)

BUYER Marilyn Laidler
MARILYN LAIDLER

RESPECTFULLY SUBMITTED
GREGORY PEASE, CHIEF
PROCUREMENT DIVISION

CONCURRENCE BY: **Ed Starnes, P.E., J.D., Acting Chief, Engineering and Construction Management**

(ALL AWARD ACTIONS SUBJECT TO LAWFULLY APPROPRIATED FUNDS)
ACTION OF CSPEC COMMITTEE ON RECOMMENDATIONS ABOVE

MEMBERS APPROVING_____ MEMBERS DISAPPROVING_____ DATE:_____

_____ _____ OTHER_____

_____ _____

_____ _____

_____ _____

_____ _____

ACTION OF AWARDING AUTHORITY DATE _____

APPROVED_____ DISAPPROVED: _____

OTHER: _____

SIGNATURE OF AUTHENTICATION _____

ONE CITY. ONE JACKSONVILLE.

City of Jacksonville, Florida

Lenny Curry, Mayor

Department of Public Works
Engineering & Construction Management Division
214 N. Hogan Street, 10th Floor
Jacksonville, FL 32202
(904) 255-8762
www.coj.net

October 15, 2018

TO: Gregory W. Pease
Chief of Procurement

THRU: John P. Pappas, P.E.
Director

FROM: for Ed Starnes, P.E., J.D.
Acting Chief, Engineering and Construction Management

SUBJECT: CDB-0006-16 – Design-Build Services - Horizontal & Civil Engineering – River Road Bridge AMENDMENT 8B

In accordance with Design/Build CDB-0006-16, Contract 6533-54, the subject project was awarded by Amendment 8A in the amount of $99,369.35 to provide investigative services associated with the design criteria package. Amendment 8B is to provide final design, permitting and construction. Negotiations have resulted in the GMP amount of $414,774.00, which includes $30,000 in contingency, as indicated on the attached Scope & Fee Summary, Exhibit J-2 and allowing for the completion of the work within 200 days from notice to proceed.

Accordingly, this is to recommend that Contract No #6533-54, Amendment 8A, originally executed March 23, 2018, between the City and J. B. Coxwell Contracting, Inc. for River Road Bridge, be amended to incorporate the attached Scope and Fee Summary, Exhibit J-2 for River Road Bridge to increase the GMP amount by $414,774.00 to a new GMP amount of $514,143.35 known as Amendment 8B.

To be encumbered as follows:

PWCP32ERD549-06505-PW0866-01	$414,774.00
TOTAL	$414,774.00

ES/lw

Attachment: Exhibit J-1

ab

EXHIBIT J-2

J.B. Coxwell Contracting, Inc.
6741 Lloyd Road West
Jacksonville, Florida 32254
Office (904) 786-1120 Fax (904) 783-2970

August 14, 2018

Gary Goldsberry, P.E.
City of Jacksonville Department of Public Works
Engineering & Construction Management Division
214 N. Hogan Street, 10th Floor
Jacksonville, Florida 32202

Re: Scope of Services and Fee Proposal for River Road Bridge Repair Services
Design-Build Construction Delivery for City of Jacksonville-RFQ CDB-0006-16
City Contract No. 6533-54 **rev. 1**

Dear Mr. Goldberry:

J.B. Coxwell Contracting, Inc. (JBCCI) is pleased to submit for your review and consideration the following lump sum fee proposal for the repair services associated with the City of Jacksonville River Road Bridge, as detailed in the GAI River Road Bridge Repair Recommendation report dated June 2018. Our scope of work for the repair services will include the following;

- GAI's design plans for the repair work, along with MOT Plans, SJRWMD Permit Exemption, and GAI Post Design Services (scope, services, exclusions as listed on GAI proposal Dated August 8, 2018)
- Contact Sunshine State One-Call of Florida for underground utility locates
- MOT devices & maintenance during repair/construction, Flagging operation as required during repair work
- Erosion control for repair/ construction activities
- 110 LF of Vinyl sheet pile installation (55 LF each Side), helical tie-backs (anchors), flowable fill between the new wall and the existing concrete wall, and new concrete cap. Based on using 10.5' long sheets of Vanguard Vinyl Sheet Pile – 5' penetration & 5.5' exposure. 24" H x 30"W concrete cap (with steel waler embeded). HDG Tie-Rods anchored to installed helical anchors.
- Flowable fill placement behind existing wall to fill existing voids
- New non-structural concrete slope pavement (3,000 psi commercial mix, 4" thick, no reinforcement)
- Misc. site restoration for disturbed areas affected during repairs/construction

- JBCCI's lump sum repair and construction fee is $ 320,000.00
- GAI's lump sum fee is $37,930.00

  *See GAI's scope and fees as detailed on their proposal dated 8-8-18 (attached)
- JBCCI's Design-Build Fee for this Project is $ 26,844.00
- Project Contingency Fee is $30,000.00

The proposed total lump sum, guaranteed maximum price (GMP) amount for the final design and repair services is Four Hundred Fourteen Thousand Seven Hundred Seventy-Four Dollars and Zero Cents ($414,774.00), which includes a project contingency of $30,000.00. The project contingency is for project elements which have not been fully designed and permitted, and which may increase in quantity or cost during the final design phase or during construction. The project contingency is for the Design-Builder's benefit and not for changed field conditions, unknown field conditions or added scope of work. The final design and repair services will be completed within two hundred days (200) from notice-to-proceed.

This lump sum proposal is inclusive of only those services noted on the attached fee summary and which are anticipated at this time. No services or work other than those noted in the proposals are included. In addition, any unknown condition(s) which may surface during construction or any other increase in scope of services may result in a request for additional fees. No work will proceed however, without first obtaining approval from the City for any additional services.

We are again very appreciative of the opportunity to provide you with our design-build services. Should you have any questions or need any further information, please do not hesitate to contact us.

Regards,
J.B. Coxwell Contracting, Inc.

Jayson Smith

Jayson Smith,
Design Build Manager

EXHIBIT J-2

gai consultants
transforming ideas into reality.

August 8, 2018

Jayson Smith
Design-Build Manager
J.B. Coxwell Contracting, Inc.
6741 Lloyd Road West
Jacksonville, Florida 32254

Re: Fee Proposal for 100% Design and Post Design Services for River Road Bridge Design-Build Construction Delivery for the City of Jacksonville RFQ CDB-0006-16/City Contract No. 6533-54

Dear Mr. Smith:

In accordance with the terms and conditions of our master agreement for professional services dated 06-07-16, **GAI Consultants, Inc., (GAI)**, is providing you with this proposal for the above referenced project.

Project Understanding and Scope of Services

GAI will provide for 100% design and post design services for the proposed River Road Bridge Repairs in accordance with the findings and recommendations issued June 2018 and attached hereto for reference. Specifically, GAI will provide for:

1. 100% design plans for the bridge repairs including MOT Plans
2. SJRWMD Permit Exemption
3. Post Design Support Services to JB Coxwell Contracting, Inc.

Finally, GAI's scope of work will entail managing the project during this phase, attending project design review meetings, providing quality assurance and quality control during and at the completion of the this phase, documenting meeting results and directives as issued by the City, schedule evaluations, and budgetary controls.

Items not included in this scope of services:

1. City 10-set Permitting (We are assuming a City RW Permit will be all that is required for this project.)
2. Utility relocation design.
3. Lighting/Landscape/hardscape/irrigation design.
4. Any other design services not specifically itemized within the scope of services outlined above.

If you have any questions, please do not hesitate to give us a call.

Regards,

GAI CONSULTANTS, INC.

Kevin R. Leadbetter, P.E.
Vice President

EXHIBIT J-2

gai consultants
transforming ideas into reality.

Attachments: GAI Fee Summary
June 2018 Recommendations Report

Exhibit A - Page 1 of 1
CONTRACT FEE SUMMARY FOR
River Road Bridge 100% Design Services

PART I - GENERAL	
1. Project - D/B Construction Delivery for COJ 100% Design and Post Design for River Road Bridge	**2. Project Number** CDB-0006-16
3. Name of Consultant GAI Consultants, Inc.	**4. Date of Proposal** 8/8/2018

PART II - LABOR RELATED COSTS

5. DIRECT LABOR	Hourly Rate	Estimated Hours	Estimated Cost	TOTAL
Principal	$ 104.30	1	$ 104.30	
Project Manager (Responsible Prof.)	$ 84.59	16	$ 1,353.44	
Senior Project Engineer	$ 64.49	48	$ 3,095.52	
Project Engineer	$ 49.14	90	$ 4,422.60	
Engineer Intern	$ 34.38	45	$ 1,547.10	
Senior Designer	$ 37.95	15	$ 569.25	
Designer/Sr. CADD Technician	$ 28.43	20	$ 568.60	
CADD Technician	$ 25.14	28	$ 703.92	
Clerical	$ 19.91	2	$ 39.82	
Survey Manager (PSM)	$ 58.62	0	$ 0.00	
Three Man Survey Crew	$ 79.04	0	$ 0.00	
			TOTAL DIRECT LABOR	**$ 12,404.55**
6. OVERHEAD (Combined Fringe Benefits & Administrative) Overhead Rate 173.58%				$ 21,531.82
7. SUBTOTAL: Labor + Overhead (Items 5 & 6)				**$ 33,936.37**
8. PROFIT: Labor Related Costs (Item 7)			x 10%	$ 3,393.64
			SUB-TOTAL SALARY RELATED COSTS	**$ 37,330.00**

PART III - OTHER COSTS

9. MISCELLANEOUS DIRECT COSTS (Lump Sum)	
Misc. Direct Expenses (Lump Sum)	$ 500.00
SJRWMD Permit /Clearance	$ 100.00
MISCELLANEOUS DIRECT COSTS SUB-TOTAL	**$ 600.00**
10. SUBCONTRACTS (Lump Sum)	
SUB-CONTRACT SUB-TOTAL	**$ -**

PART IV - SUMMARY

TOTAL LUMP SUM AMOUNT (Items 5, 6, 8, 9 and 10)	**$ 37,930.00**

EXHIB

gai consultants

gaiconsultants.com | transforming ideas into reality.

River Road Bridge Repair Recommendations

J.B. Coxwell Contracting, Inc.
Jacksonville, Florida

June 2018

gai consultants

60 years

Prepared by: GAI Consultants, Inc.
Jacksonville Office
1301 Riverplace Boulevard, Suite 900
Jacksonville, Florida 32207

Prepared for: J.B. Coxwell Contracting, Inc.
6741 Lloyd Road West
Jacksonville, Florida 32254

Table of Contents

River Road Bridge Repair Recommendations

Photograph 1 Prior to Removal of Failed Sloped Pavement, Looking South East
Photograph 2 Prior to Removal of Failed Sloped Pavement, Looking North East
Photograph 3 After Removal of Failed Sloped Pavement, Looking North East

Appendix A Pile Buck Calculations
Appendix B Vinyl Sheet Pile Wall Specifications

© 2018 GAI CONSULTANTS

River Road Bridge Repair Recommendations

There is significant soil erosion at both ends of Bridge No. 724279 on River Road which has caused damage to the adjacent concrete sheet pile bulkhead wall. After performing site investigations, evaluating photographs, and reviewing geotechnical information provided by Meskel and Associates, we have determined that the most critical issue at the site is the need to install a new sheet pile bulkhead wall underneath the bridge at each end bent. In addition, the soil that has eroded from underneath the approach slabs and from behind the existing sheet pile walls must be restored and the sloped pavement must be replaced. For aesthetic purposes, the brick walls at each end of the bridge should be replaced in-kind.

The overhead clearance beneath the bridge is extremely limited, making it challenging to construct a new sheet pile bulkhead wall. Typically, sheet pile walls are installed by driving the individual sheets into the ground from above which is not feasible at this site. Further, removal of the existing sheet pile walls is not practical for the same reason, the lack of access from above. Therefore, we have coordinated with sheet pile wall manufacturers and performed retaining wall design calculations in order to determine the best solution. At each end bent, we recommend creating a sheet pile curtain by linking the individual sheets together in the field and holding them together with a steel wale. The linked curtain can then be slid laterally in front of the existing sheet pile wall. A water jet drill, or similar equipment requiring minimal overhead clearance, can be used to drive the sheet piles into the ground four feet to achieve resistance at the toe. The top of the wall can be anchored back with helical anchors through the proposed concrete bulkhead cap. We recommend using flowable fill, rather than soil, to fill the voids left by the soil that has eroded away behind the existing wall, as it will provide a stronger bond around the anchors. Flowable fill should also be placed between the existing and proposed walls.

Soil beneath the concrete slope pavement has also eroded creating a cracking failure in which the concrete caved in. As a solution, we recommend filling all voids underneath the proposed sloped pavement with flowable fill to provide more stabilization. As mentioned above, this will also be beneficial for the helical anchors. Flowable fill can also be used to restore the concrete sloped pavement that wrapped around the bridge to the previous elevation prior to the failure.
There are large voids underneath the approach slabs. There does not appear to be damage to the concrete slabs at this time, but action should be taken now to stabilize them and prevent them from caving in similar to the sloped pavement. Flowable fill is an option, but lightweight injectable expansive polyurethane should also be considered.

EXHIBIT J-2

PHOTOGRAPHS

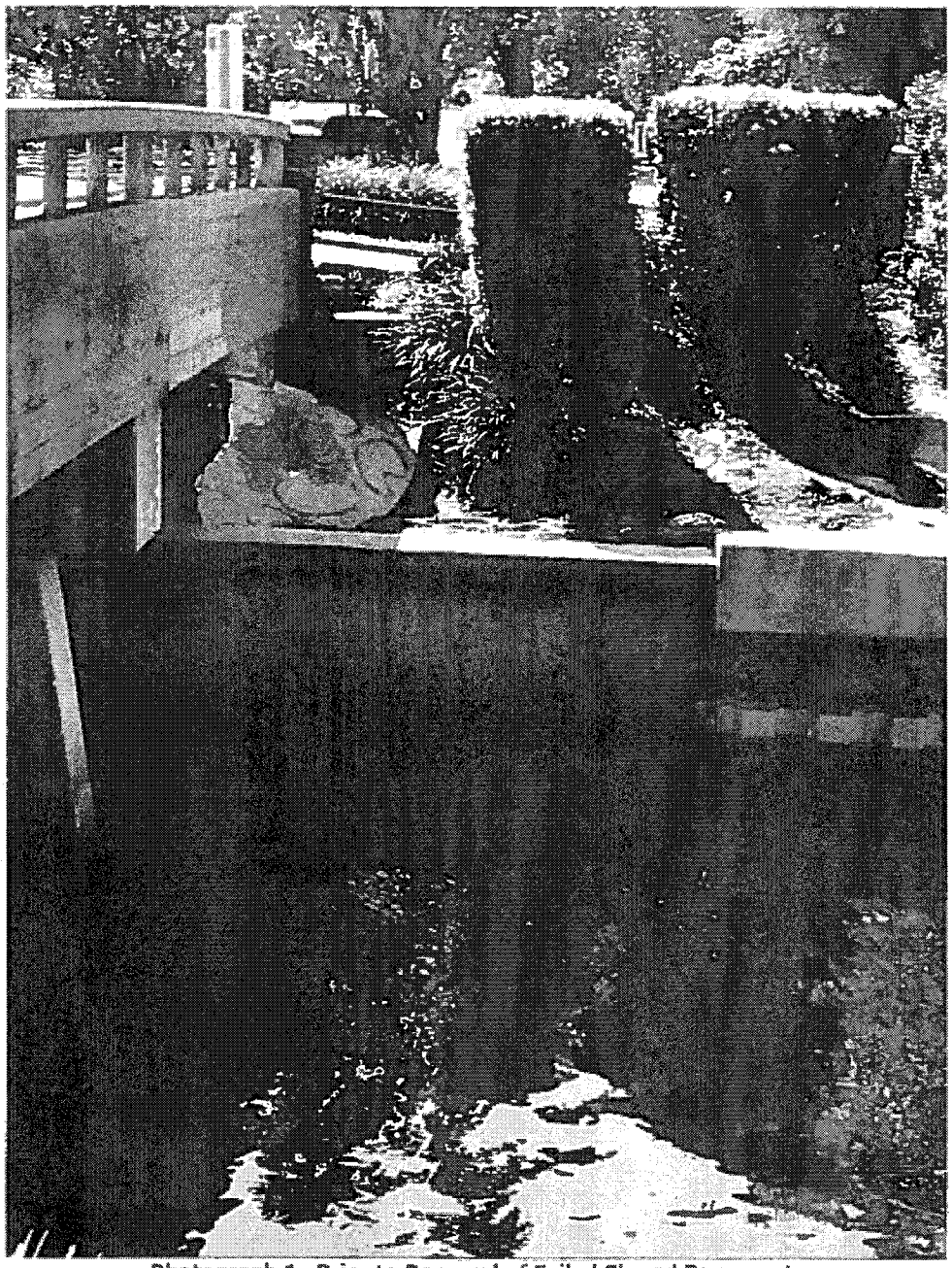

Photograph 1. Prior to Removal of Failed Sloped Pavement. Looking South East

EXHIBIT J-2

Photograph 2. Prior to Removal of Failed Sloped Pavement.
Looking North East

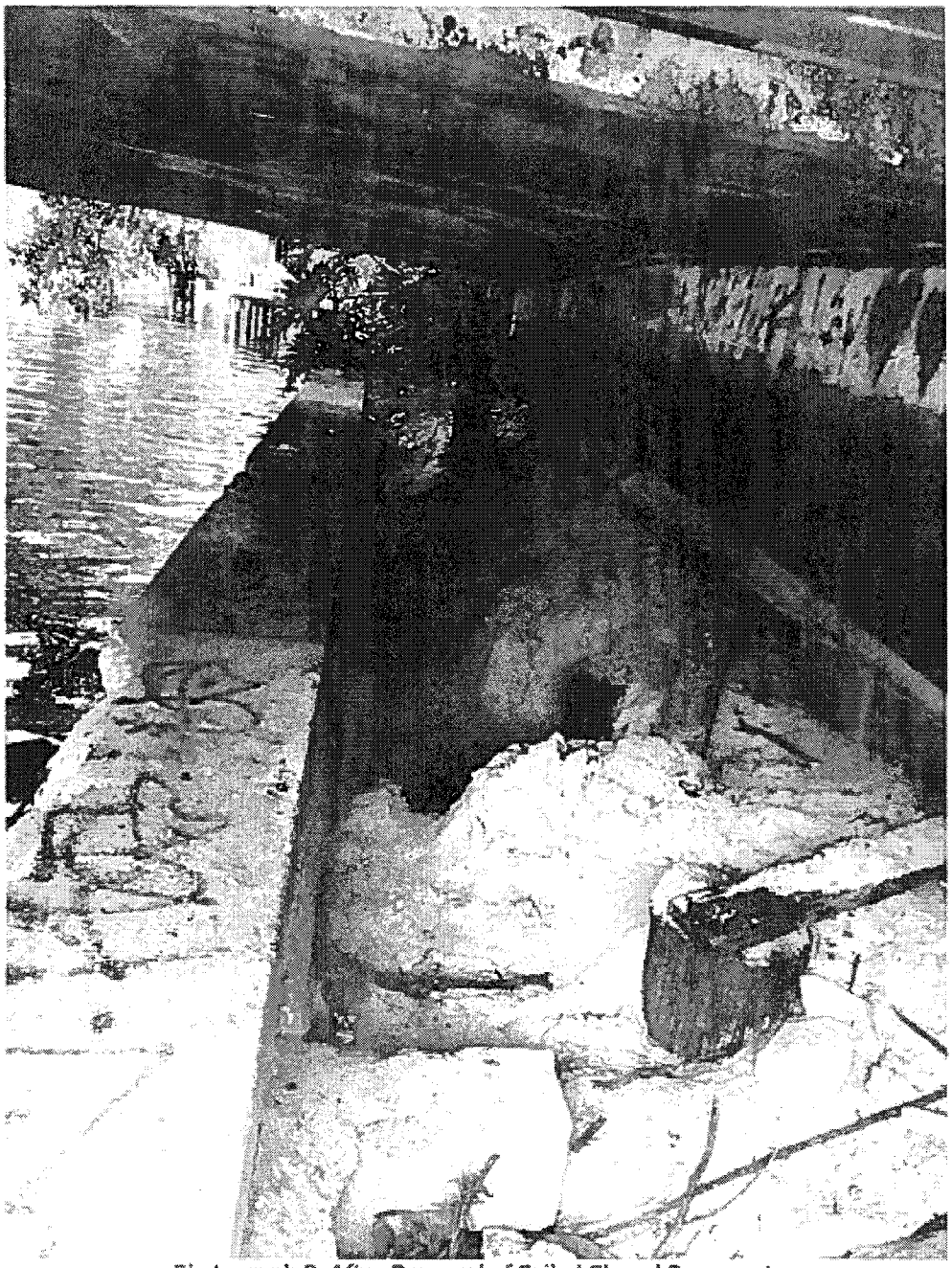

Photograph 3. After Removal of Failed Sloped Pavement. Looking North East

APPENDIX A
Pile Buck Calculations

Client: J.B. Coxwell

Title: River Road Bridge Rehabilitation
Designer: JLJ
Page: 1
Date: 6.6.18

Sheet: Vinyl Sheet Pile
Pressure: Rankine
Toe: No Earth Support

Vinyl Sheet Pile Wall
Anchor at Bulkhead Cap Level
4' Toe

EXHIBIT J-2

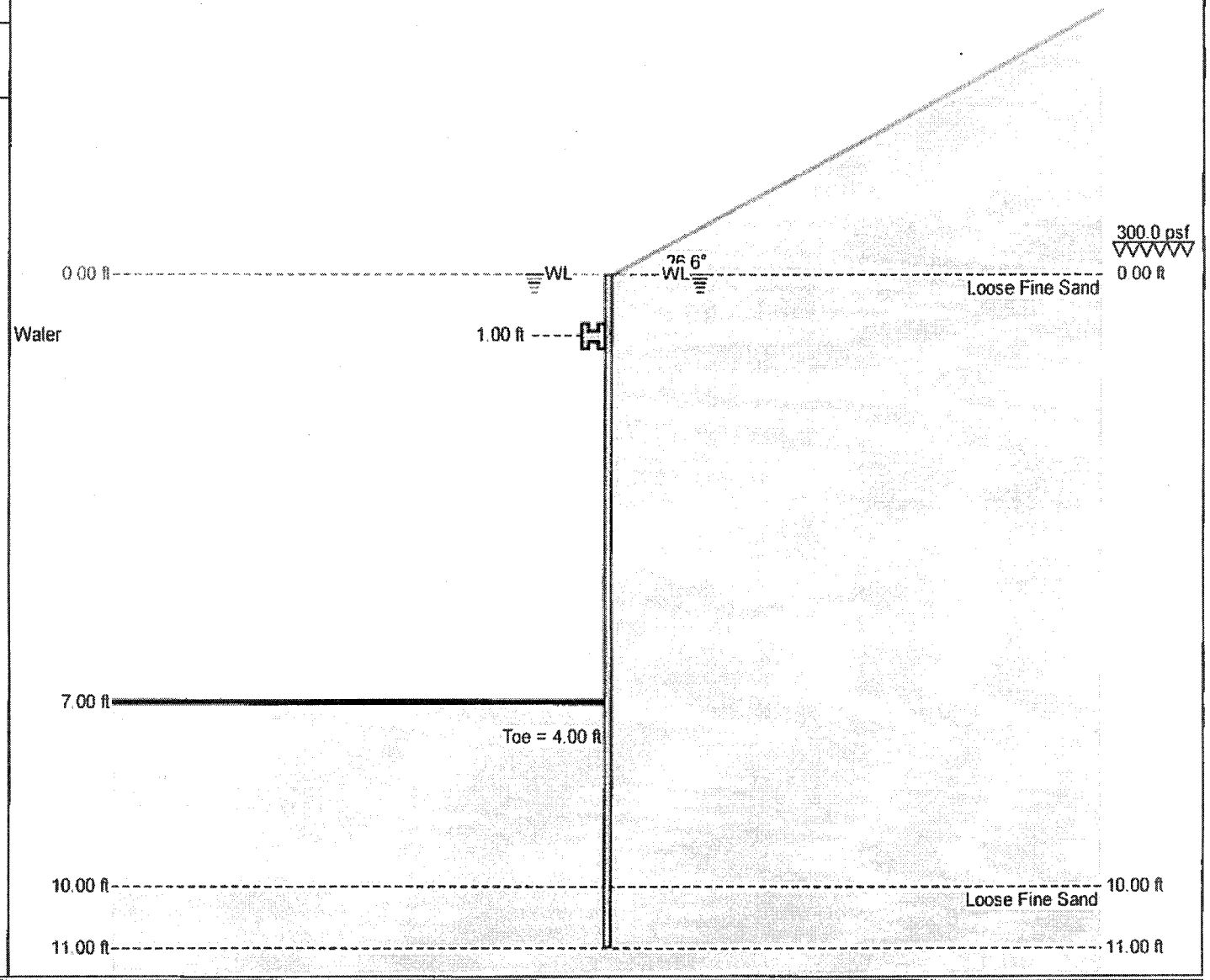

GAI

SPW911, v2.39

© 2001 - 2007, Pile Buck®, Inc.
Email: pilebuck@pilebuck.com
Web: www.pilebuck.com

Client: J.B. Coxwell
Title: River Road Bridge Rehabilitation
Designer: JLJ
Page: 2
Date: 6.6.18

Sheet: Vinyl Sheet Pile
Pressure: Rankine
Toe: No Earth Support

Vinyl Sheet Pile Wall
Anchor at Bulkhead Cap Level
4' Toe

EXHIBIT J-2

Input Data

Depth Of Excavation = 7.00 ft Depth Of Active Water = 0.00 ft Water Density = 62.43 pcf
Surcharge = 300.0 psf Depth Of Passive Water = 0.00 ft Minimum Fluid Density = 31.82 pcf
Slope (active) = 26.6 degrees

Soil Profile

Depth (ft)	Soil Name	γ (pcf)	γ' (pcf)	C (psf)	C_a (psf)	ϕ(°)	δ(°)	K_a	K_{ac}	K_p	K_{pc}
0.00	Loose Fine Sand	103.40	41.00	0.0	0.0	29.0	0.0	0.33	0.00	3.00	0.00
10.00	Loose Fine Sand	111.40	49.00	0.0	0.0	30.0	0.0	0.33	0.00	3.00	0.00
12.00	Loose Fine Sand	113.40	51.00	0.0	0.0	30.0	0.0	0.33	0.00	3.00	0.00

Solution

Sheet

Sheet Name	I (in^4/ft)	E (psi)	Z (in^3/ft)	f (psi)	Maximum Bending Moment (ftlb/ft)	Upstand (ft)	Toe (ft)	Pile Length (ft)
Vinyl Sheet Pile	59.70	3.8E+05	14.90	6300.0	4103.0	0.00	4.00	11.00

Load Model: Area Distribution (Hinge Method used for Shear Force, Bending Moment and Deflection)

Supports

Depth (ft)	Type	Linear Load (lb/ft)
1.00	Water	910.2

Maxima

	Maximum	Depth
Bending Moment	1470.9 ftlb/ft	1.00 ft
Deflection	0.4 in	6.04 ft
Pressure	193.7 psf	7.00 ft
Shear Force	802.5 lb/ft	1.00 ft

GAI

SPW911, v2.39

© 2001 - 2007, Pile Buck®, Inc.
Email: pilebuck@pilebuck.com
Web: www.pilebuck.com

Client: J.B. Coxwell
Title: River Road Bridge Rehabilitation
Designer: JLJ
Page: 3
Date: 6.6.18

Sheet: Vinyl Sheet Pile
Pressure: Rankine
Toe: No Earth Support

	Maximum	d (ft)
○	193.7 psf	7.00
□	1470.9 ftlb/ft	1.00
◇	802.5 lb/ft	1.00
●	0.4 in	6.04

Vinyl Sheet Pile Wall
Anchor at Bulkhead Cap Level
4' Toe

EXHIBIT J-2

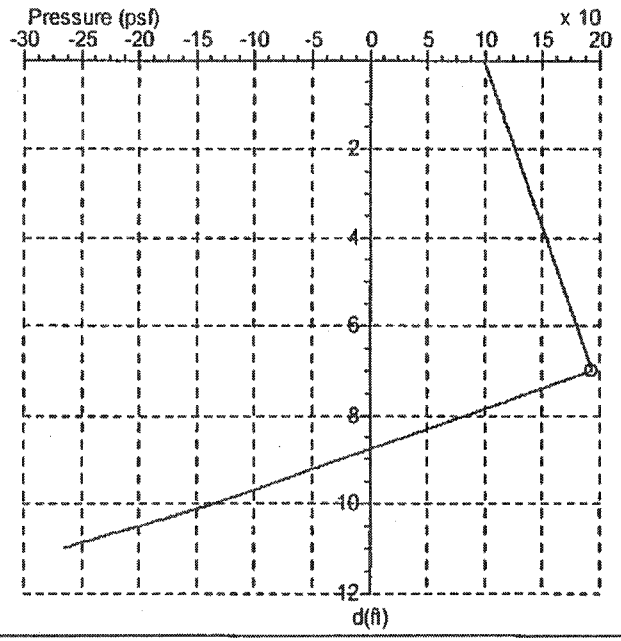

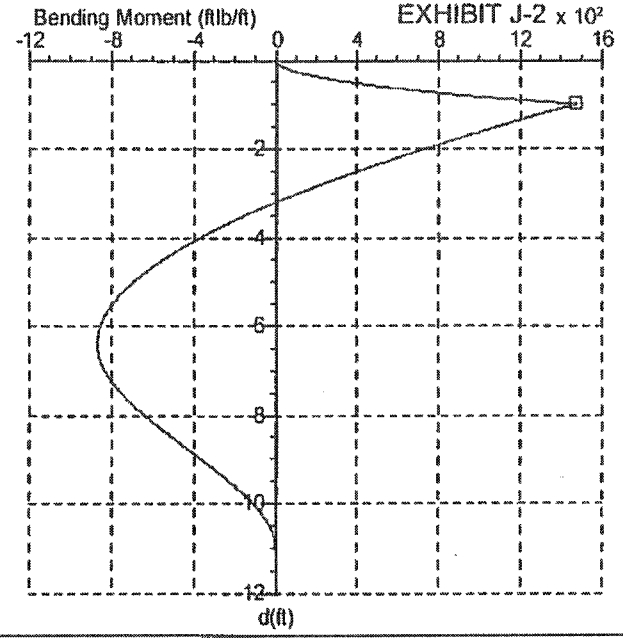

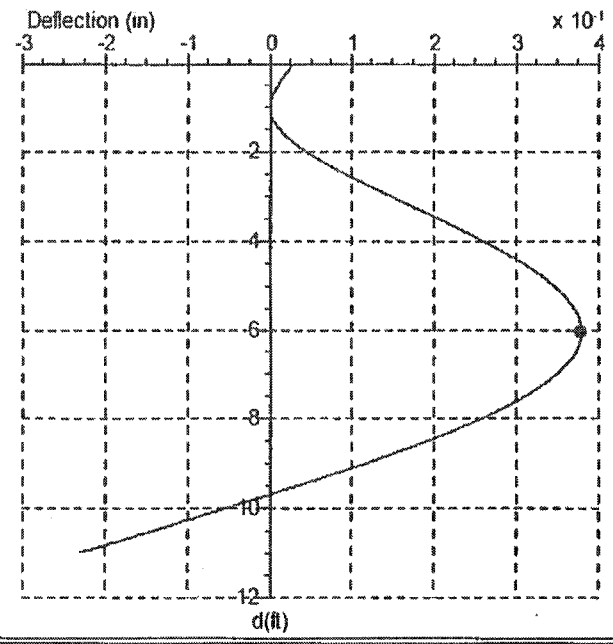

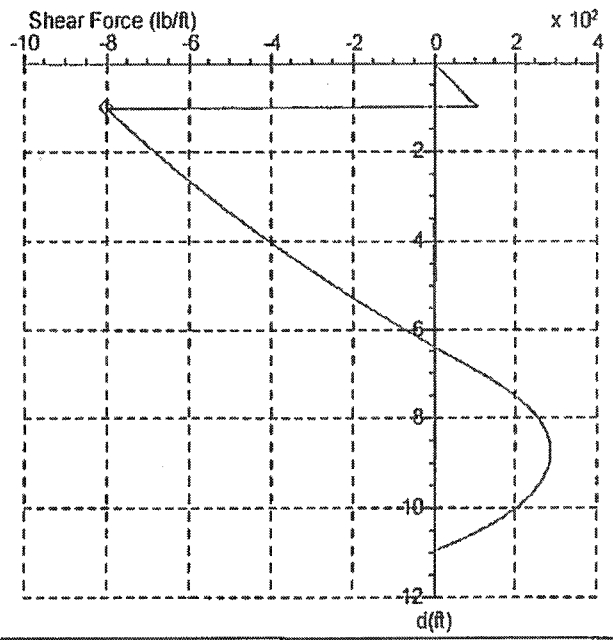

GAI

SPW911, v2.39

© 2001 - 2007 Pile Buck®, Inc.
Email: piebuck@piebuck.com
Web: www.piebuck.com

Client: J.B. Coxwell

Title: River Road Bridge Rehabilitation
Designer: JLJ
Page: 4
Date: 6.6.18

Sheet: Vinyl Sheet Pile
Pressure: Rankine
Toe: No Earth Support

Vinyl Sheet Pile Wall
Anchor at Bulkhead Cap Level
4' Toe

EXHIBIT J 2

depth (ft)	P (psf)	M (ftlb/ft)	D (in)	F (lb/ft)
0.00	99.1	0.1	0.0	0.9
0.10	100.4	13.3	0.0	10.1
0.19	101.7	55.8	0.0	20.4
0.29	103.0	120.1	0.0	29.9
0.39	104.3	219.6	0.0	40.4
0.49	105.7	349.6	0.0	51.1
0.58	106.9	494.5	0.0	61.0
0.68	108.3	683.6	0.0	71.9
0.78	109.5	883.0	0.0	82.0
0.88	110.9	1132.9	0.0	93.2
0.97	112.3	1415.1	0.0	104.6
1.07	113.5	1419.6	0.0	-795.2
1.17	114.9	1340.0	0.0	-783.7
1.27	116.2	1261.5	0.0	-772.1
1.36	117.5	1191.1	0.0	-761.3
1.46	118.8	1114.9	0.0	-749.4
1.56	120.1	1046.7	0.0	-738.5
1.65	121.4	972.8	0.0	-726.3
1.75	122.8	900.1	0.0	-714.0
1.85	124.1	835.1	0.0	-702.6
1.95	125.4	764.8	0.0	-690.1
2.04	126.8	695.8	0.0	-677.3
2.14	128.0	634.2	0.1	-665.6
2.24	129.4	567.7	0.1	-652.7
2.34	130.6	508.4	0.1	-640.7
2.43	132.0	444.4	0.1	-627.5
2.53	133.4	381.7	0.1	-614.1
2.63	134.6	325.9	0.1	-601.8
2.73	136.0	265.9	0.1	-588.2
2.82	137.2	212.5	0.1	-575.7
2.92	138.6	155.1	0.1	-561.7
3.02	139.9	99.1	0.2	-547.7
3.12	141.2	49.4	0.2	-534.8
3.21	142.5	-3.9	0.2	-520.5
3.31	143.9	-55.7	0.2	-506.0
3.41	145.1	-101.6	0.2	-492.8
3.50	146.5	-150.6	0.2	-478.1
3.60	147.7	-193.8	0.2	-464.6

depth (ft)	P (psf)	M (ftlb/ft)	D (in)	F (lb/ft)
3.70	149.1	-240.0	0.2	-449.6
3.80	150.5	-284.7	0.2	-434.5
3.89	151.7	-323.9	0.2	-420.7
3.99	153.1	-365.6	0.3	-405.3
4.09	154.4	-405.8	0.3	-389.8
4.19	155.7	-440.9	0.3	-375.6
4.28	157.0	-478.1	0.3	-359.8
4.38	158.3	-510.5	0.3	-345.3
4.48	159.6	-544.5	0.3	-329.3
4.58	161.0	-577.0	0.3	-313.1
4.67	162.3	-605.1	0.3	-298.3
4.77	163.6	-634.4	0.3	-281.9
4.87	164.9	-659.6	0.3	-266.8
4.96	166.2	-685.8	0.3	-250.1
5.06	167.6	-710.2	0.3	-233.3
5.16	168.8	-731.0	0.4	-217.8
5.26	170.2	-752.2	0.4	-200.7
5.35	171.6	-771.6	0.4	-183.5
5.45	172.8	-787.8	0.4	-167.7
5.55	174.2	-803.9	0.4	-150.2
5.65	175.4	-817.0	0.4	-134.2
5.74	176.8	-829.7	0.4	-116.4
5.84	178.1	-840.6	0.4	-98.5
5.94	179.4	-849.0	0.4	-82.1
6.04	180.7	-856.5	0.4	-64.0
6.13	182.1	-862.1	0.4	-45.7
6.23	183.3	-865.6	0.4	-28.9
6.33	184.7	-867.6	0.4	-10.4
6.42	185.9	-867.9	0.4	6.9
6.52	187.3	-866.4	0.4	25.4
6.62	188.7	-862.9	0.4	44.4
6.72	189.9	-858.1	0.4	61.8
6.81	191.3	-851.0	0.4	81.0
6.91	192.5	-842.9	0.4	98.6
7.01	192.3	-832.0	0.3	118.1
7.11	181.3	-819.3	0.3	136.9
7.20	171.3	-806.1	0.3	153.0
7.30	160.2	-789.9	0.3	169.6

depth (ft)	P (psf)	M (ftlb/ft)	D (in)	F (lb/ft)
7.40	149.2	-772.0	0.3	185.2
7.50	139.2	-754.5	0.3	198.3
7.59	128.1	-733.9	0.3	211.8
7.69	118.1	-714.0	0.3	223.0
7.79	107.0	-691.0	0.3	234.3
7.88	96.0	-666.9	0.3	244.5
7.98	86.0	-644.1	0.3	252.8
8.08	74.9	-618.2	0.2	260.9
8.18	63.9	-591.6	0.2	267.8
8.27	53.9	-566.8	0.2	273.2
8.37	42.8	-539.1	0.2	278.0
8.47	32.8	-513.4	0.2	281.4
8.57	21.7	-484.9	0.2	284.1
8.66	10.7	-456.2	0.2	285.7
8.76	0.7	-430.0	0.2	286.2
8.86	-10.4	-401.1	0.1	285.6
8.96	-20.4	-375.0	0.1	284.2
9.05	-31.4	-346.5	0.1	281.5
9.15	-42.5	-318.3	0.1	277.7
9.25	-52.5	-293.0	0.1	273.3
9.35	-63.5	-265.7	0.1	267.4
9.44	-74.6	-239.0	0.0	260.4
9.54	-84.6	-215.4	0.0	253.1
9.64	-95.7	-190.3	0.0	243.9
9.73	-105.7	-168.4	0.0	234.7
9.83	-116.7	-145.2	0.0	223.4
9.93	-127.8	-123.2	0.0	211.0
10.03	-138.4	-104.4	-0.1	198.7
10.12	-151.6	-85.0	-0.1	183.3
10.22	-164.8	-67.3	-0.1	166.6
10.32	-176.8	-52.7	-0.1	150.1
10.42	-190.0	-38.5	-0.1	130.7
10.51	-202.0	-27.3	-0.1	111.8
10.61	-215.2	-17.0	-0.2	89.7
10.71	-228.4	-9.0	-0.2	66.2
10.81	-240.4	-3.9	-0.2	43.6
10.90	-253.5	-0.6	-0.2	17.5
11.00	-264.3	0.0	-0.2	0.0

GAI

SPW911, v2.39

© 2001 - 2007, Pile Buck®, Inc.
Email: pilebuck@pilebuck.com
Web: www.pilebuck.com

APPENDIX B
Vinyl Sheet Pile Wall Specifications

EXHIBIT J-2

EverLast SYNTHETIC PRODUCTS, LLC

ESP 4.1 VINYL SHEET PILE (Technical Data Sheet)

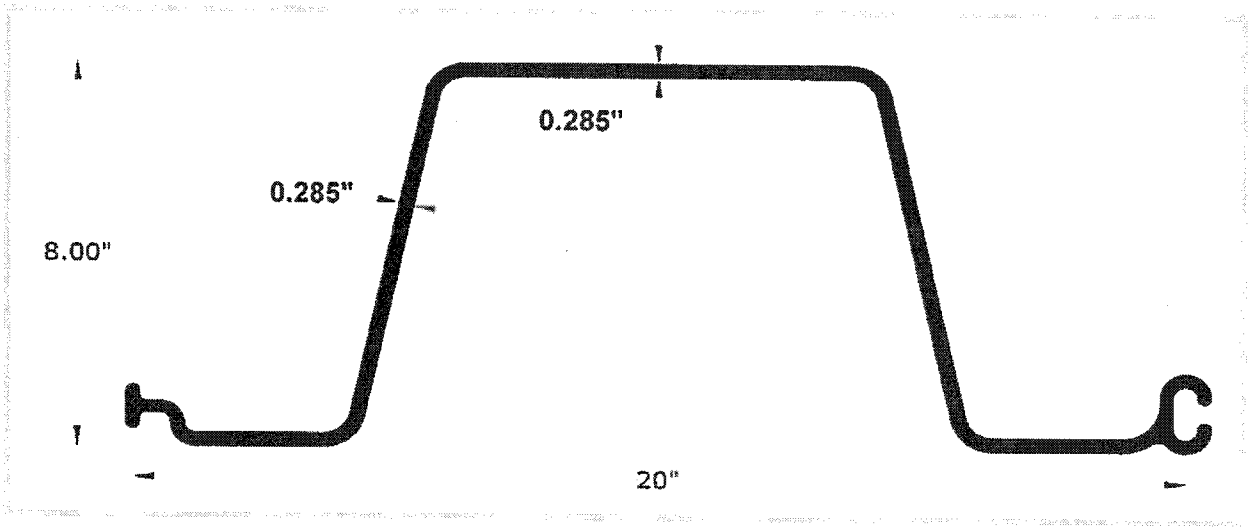

Strength Rating (M)	Lbs-Ft/Ft	**4,103**	Modulus of Elasticity (E)	psi	380,000
Allowable Shear (V)	Lbs/Ft	**3,285**	Co-Extruded		Yes
Thickness (t)	inches	**0.285**	Section Depth	inches	8
Section Modulus (Z)	in^3/ft	**14.9**	Section Width	inches	20
Moment of Inertia (I)	in^4/ft	**59.7**	UV Stabilized		Yes
Ultimate Tensile Stress	psi	6,300	Standard	sheets/	20 &
Creep Limited stress	psi	4,000	Packaging	bundle	10

This Alabama development features a Navy-style bulkhead construction with the EverLast 4.1 Series.

The values shown are nominal and may vary. The information found in this document is believed to be true and accurate. No warranties of any kind are made as to the suitability of ESP sheet piling for particular applications or results obtained therefrom. Consult with a professional engineer and/or contractor as to the suitability of this product for your particular application.

1000 Wyngate Parkway | Suite 100 | Woodstock, GA 30189 | Tel: (800) 687-0036 | Fax: (800) 687-0048
sales@everlastseawalls.com | www.everlastseawalls.com

SUBJECT: **RFQ FOR DESIGN-BUILD SVCS FOR HORIZONTAL/CIVIL ENGINEERING PROJECTS**

BID # **CDB-0006-16** OPEN DATE: **10/21/2015**

COMPETITIVE SEALED PROPOSAL EVALUATION COMMITTEE

KIND AND BASIS OF CONTRACT:
CONSTRUCTION – DESIGN/BUILD

AGENCY: **DEPARTMENT OF PUBLIC WORKS**

BASIS OF AWARD: **QUALIFICATIONS BASED**

NUMBER OF BIDS INVITED: - NUMBER RECEIVED: - OTHER: -

SUMMARY OF BIDS AND RECOMMENDED ACTIONS:

The Department of Public Works has completed negotiations with J.B. Coxwell Contracting, Inc., for the River Road Bridge Project in accordance with subject bid.

Recommend approval of award to J. B. Coxwell Contracting, Inc., to provide investigative services associated with the design criteria package. Guaranteed Maximum Price in the amount of $99,369.35, per "Exhibit J-1" and allowing for the completion of work within 90 days from notice to proceed.

Funding for this project to be executed by Amendment 8A for contract # 6533-54 and encumbered by account: PWCP32ERD549-069505-PW0381-02

Attachments: Recommendation Memo, Exhibit "J-1", Previous Award(s)

BUYER Marilyn Laidler
MARILYN LAIDLER

RESPECTFULLY SUBMITTED David Pease
For GREGORY PEASE, CHIEF PROCUREMENT DIVISION

CONCURRENCE BY: **Tom Fallin, P.E., Chief-Engineering & Construction Management Division**

(ALL AWARD ACTIONS SUBJECT TO LAWFULLY APPROPRIATED FUNDS)
ACTION OF CSPEC COMMITTEE ON RECOMMENDATIONS ABOVE

MEMBERS APPROVING 5 MEMBERS DISAPPROVING Ø DATE: 2/15/18

OTHER

ACTION OF AWARDING AUTHORITY DATE 2/15/18

APPROVED DISAPPROVED:

OTHER:

SIGNATURE OF AUTHENTICATION

Sam E. Mousa
Chief Administrative Officer
For: Mayor Lenny Curry
Under Authority of:
Executive Order No. 2015-05

SUBJECT: RFQ- FOR DESIGN- BUILD SERVICES OF HORIZONTAL/CIVIL ENGINEERING PROJECTS

BID # CDB-0006-16

OPEN DATE: 10/21/2015

COMPETITIVE SEALED PROPOSAL EVALUATION COMMITTEE

KIND AND BASIS OF CONTRACT:
CONSTRUCTION – DESIGN/BUILD

AGENCY: DEPARTMENT OF PUBLIC WORKS

BASIS OF AWARD: EVALUATION CRITERIA

NUMBER OF BIDS INVITED: 5 NUMBER RECEIVED: 5 OTHER: 1

SUMMARY OF BIDS AND RECOMMENDED ACTIONS:
The City had previously issued this RFP, and the evaluation committee has evaluated proposals. Subsequently, presentations were conducted and evaluated on January 28, 2016. Based upon the combination of proposal and presentation evaluations, scores and rankings are as follows (Listed in alphabetical order):

2) Archer-Western – 118.25
3) Callaway Contracting, Inc. - 100
1) J.B. Coxwell Contracting, Inc. - 121.5

Recommend approval of award to J.B. Coxwell Contracting, Inc., as receiving the highest score in accordance with the evaluation and ranking above. Period of Service will be five (5) years from effective date of contract with funding not-to-exceed $6,000,000.00 annually. To be executed by formal contract through Office of General Counsel.

Attachments: Recommendation Memo, Scoring Matrix, Previous Award

BUYER Marilyn Laidler
MARILYN LAIDLER

RESPECTFULLY SUBMITTED
GREGORY REASE, CHIEF
PROCUREMENT DIVISION

CONCURRENCE BY: Thomas N. Fallin, P.E., Acting Chief-Engineering & Construction Management Division

(ALL AWARD ACTIONS SUBJECT TO LAWFULLY APPROPRIATED FUNDS)
ACTION OF CSPEC COMMITTEE ON RECOMMENDATIONS ABOVE

MEMBERS APPROVING 5

MEMBERS DISAPPROVING _____ DATE: 2/4/16

OTHER _____

ACTION OF AWARDING AUTHORITY

MR APPROVED ✓ DISAPPROVED: _____ DATE 2/04/16

OTHER: _____

Sam E. Mousa
Chief Administrative Officer
For: Mayor Lenny Curry
Under Authority of
Executive Order No. 2015-05

SIGNATURE OF AUTHENTICATION

SUBJECT: RFQ- FOR DESIGN- BUILD SERVICES OF HORIZONTAL/CIVIL ENGINEERING PROJECTS
BID # CDB-0006-16

OPEN DATE: 10/21/2015

COMPETITIVE SEALED PROPOSAL EVALUATION COMMITTEE

KIND AND BASIS OF CONTRACT:
CONSTRUCTION – DESIGN/BUILD

AGENCY: DEPARTMENT OF PUBLIC WORKS

BASIS OF AWARD: EVALUATION CRITERIA

NUMBER OF BIDS INVITED: 5 NUMBER RECEIVED: 5 OTHER: 1

SUMMARY OF BIDS AND RECOMMENDED ACTIONS:
The City had previously issued this RFP, and the evaluation committee has evaluated proposals. Based upon the proposal evaluation, the average scores and rankings are as follows (Listed in alphabetical order):

2) Archer-Western Contractors, LLC. – 91
1) J.B. Coxwell Contracting- 92
3) Callaway Contracting- 74

Pursuant to Section 2.6 – Award of Contract of the RFP, recommend approval to conduct formal interviews with each of the three-top ranked Firms.

Attachments: Recommendation Memo, Scoring Matrix, Bid Tabulation, Section 2.6, JSEB Letter

BUYER Marilyn Laidler
MARILYN LAIDLER

RESPECTFULLY SUBMITTED
GREGORY PEASE, CHIEF
PROCUREMENT DIVISION

CONCURRENCE BY: William J. Joyce, P.E., Chief-Engineering & Construction Management

(ALL AWARD ACTIONS SUBJECT TO LAWFULLY APPROPRIATED FUNDS)
ACTION OF CSPEC COMMITTEE ON RECOMMENDATIONS ABOVE

MEMBERS APPROVING 5

MEMBERS DISAPPROVING _____ DATE: 12-30-15

OTHER _____

ACTION OF AWARDING AUTHORITY

APPROVED ✓ DATE 1/01/16

OTHER: _____ DISAPPROVED: _____

SIGNATURE OF AUTHENTICATION

Sam E. Mousa
Chief Administrative Officer
For: Mayor Lenny Curry
Under Authority of:
Executive Order No. 2015-05

QWS3270X 10/19/2018 12:15 PM
FAML6350 V5.1 ** NW COJ FAMIS PRODUCTION ** 10/19/2018
LINK TO: ACCOUNT SUMMARY INQUIRY 12:15 PM

FISCAL MO/YEAR : 01 2019 CURRENCY CODE :
INDEX CODE : PWCP32ERD549 PW ROAD CAPITAL PROJECTS (F5490)
SUBOBJECT : 069505 DM-OTHER CONSTRUCTION COSTS
PROJECT : PW0846 ORTEGA HILLS INGRESS & EGRESS LAND ACQUI
PROJECT DETAIL : 01 ORTEGA HILLS INGRESS & EGRESS LAND ACQUI
GRANT :
GRANT DETAIL :
USER CODE :

S	OCT 2018	ANNUAL BALANCE	ALL YEARS BALANCE
ESTIMATED REVENUES	.00	.00	.00
REVENUES	.00	.00	.00
UNREALIZED REVENUES	.00	.00	.00
BUDGET	1,045,026.00	1,045,026.00	1,045,026.00
EXPENDITURES	.00	.00	.00
ENCUMBRANCES	.00	.00	.00
PRE-ENCUMBRANCES	.00	.00	.00
REMAINING BALANCE	1,045,026.00	1,045,026.00	1,045,026.00

F1-HELP F2-SELECT F4-PRIOR F5-NEXT
F9-LINK F10-PRIOR-MO F11-NEXT-MO
G005 - PRIOR RECORD DISPLAYED