2

SUBJECT: RFQ-DESIGN-BUILD SERVICES FIRE STATIONS NUMBERS: 36, 64, AND 65

BID # CDB-0127-19 **OPEN DATE: 2019-04-17**

COMPETITIVE SEALED PROPOSAL EVALUATION COMMITTEE

KIND AND BASIS OF CONTRACT: CONSTRUCTION – DESIGN/BUILD- REQUEST FOR QUALIFICATIONS

AGENCY: DEPARTMENT OF PUBLIC WORKS

BASIS OF AWARD: EVALUATION CRITERIA

NUMBER OF BIDS INVITED: 5 **NUMBER RECEIVED: 6** **OTHER: 0**

SUMMARY OF BIDS AND RECOMMENDED ACTIONS:

Recommend approval of Amendment 2 to Stellar Group, Inc . (contract # 71526-22), to return unspent funds from the tree mitigation allowance and material escalation contingency, as indicated in the attached scope and fees summary, Exhibit C, in the amount of $141,085.15. Total reduced guaranteed maximum price not-to-exceed $6,039,282.96.

Funding Source: 32111.127001.565051.010103.00000000.00000.0000000 – ($141,085.15) - to be executed by contract amendment through Office of General Counsel.

ATTACHMENTS: Recommendation Memo, Exhibit "C", Previous Award(s)

ANALYST: BENJAMIN KEMP

RESPECTFULLY SUBMITTED: FOR: DUSTIN FREEMAN, CHIEF PROCUREMENT DIVISION

CONCURRENCE BY: **Robin G. Smith, Chief, Engineering and Construction Management**

(ALL AWARD ACTIONS SUBJECT TO LAWFULLY APPROPRIATED FUNDS)

ACTION OF CSPEC COMMITTEE ON RECOMMENDATIONS ABOVE

MEMBERS APPROVING_____ MEMBERS DISAPPROVING_____ DATE:_____

_____ _____ OTHER_____

_____ _____

_____ _____

_____ _____

_____ _____

ACTION OF AWARDING AUTHORITY DATE _____

APPROVED_____ DISAPPROVED: _____

OTHER: _____

SIGNATURE OF AUTHENTICATION _____

City of Jacksonville, Florida

Donna Deegan, Mayor

Department of Public Works
Engineering & Construction Management Division
214 N. Hogan Street, 10th Floor
Jacksonville, FL 32202
(904) 255-8762
www.coj.net

A NEW DAY

December 8, 2023

TO: Dustin Freeman
Chief of Procurement

THRU: Nina Sickler, P.E.
Director of Public Works

FROM: Robin G. Smith, P.E.
Chief, Engineering and Construction Management Division

Keith Powers
Director of Fire and Rescue

Thomas G. McKnight
Capital Improvement Construction Manager

SUBJECT: Amendment 2 CDB-0127-19 Contract 71526-22/ PO 635212-22
Stellar Group, Inc.
Design Build Services for Fire Station 64

In accordance with Design/Build CDB-0127-19, Contract 71526-22/ PO 635212-22 for Fire Station#64 was awarded in the amount of $186,475.11 to provide 90% Design and Preconstruction Services. Amendment 1 in the amount of $5,993,893.00 was to provide 100% design, permits and construction services. Amendment 2 is to return unspent funds from the tree mitigation allowance and material escalation contingency, as indicated on the attached Scope & Fee Summary, Exhibit C in the amount of $141,085.15.

Accordingly, this is to recommend that Contract 71526-22, originally executed February 4, 2022, with Stellar Group, Inc. for Fire Station No. 64 be amended to incorporate the attached Scope and Fee, Exhibit C to decrease the GMP by $141,085.15 to a new GMP of $6,039,282.96.

Funding is as follows:

Accounts		TOTAL
32111.127001.565051.010103.00.00.00		
010103		
FRCP Fire Stations Capital Projects- Fire Control		
565051		
1		
32111-384020		($141,085.15)

RGS/lw

PCCO #001

Stellar
2900 Hartley Road
Jacksonville, Florida 32257

Project: 22306779 - Fire Station 64
10865 Harts Road
Jacksonville, Florida 32218

Prime Contract Change Order #001: Owner Change Order #001

TO:	City of Jacksonville - Department of Public Works 214 N. Hogan Street Jacksonville, Florida 32202	**FROM:**	Stellar Group, Inc. 2900 Hartley Road Jacksonville Florida 32257
DATE CREATED:	11/ 21 /2023	**CREATED BY:**	Scott Wright (Stellar Group, Inc.)
CONTRACT STATUS:	Pending - In Review	**REVISION:**	0
DESIGNATED REVIEWER:		**REVIEWED BY:**	
DUE DATE:		**REVIEW DATE:**	
INVOICED DATE:		**PAID DATE:**	
SCHEDULE IMPACT:	3 days	**EXECUTED:**	No
CONTRACT FOR:	1:Fire Station 64 Prime Contract	**TOTAL AMOUNT:**	($141,085.15)

DESCRIPTION:
This Owner Change Order #001 is to return unspent funds from the Tree Mitigation Allowance of $1,633.18 and unspent funds from the Material Escalation Contingency of $139,451.97. The Substantial Completion Date is revised to October 4, 2023.

ATTACHMENTS:

POTENTIAL CHANGE ORDERS IN THIS CHANGE ORDER:

PCO #	Title	Schedule Impact	Amount
001	CE #027 - FS64 Final Owner Change Order	3 days	(141,085.15)
		TOTAL:	($141,085.15)

CHANGE ORDER LINE ITEMS:

PCO # 001 : CE #027 - FS64 Final Owner Change Order

#	Cost Code	Description	Amount
1	32-3204 - Landscaping & Irrigation	Return unspent tree mitigation funds	($1,633.18)
2	90-9001 - Contingency / Risk	Return unspent Material Escalation Contingency Funds	($139,451.97)
		Subtotal:	($141,085.15)
		Builders Risk Insurance: 0.00%	0.00
		P&P Bond: 0.00%	0.00
		General Liability Insurance: 0.00%	0.00
		Overhead & Fee: 0.00%	0.00
		Grand Total:	($141,085.15)

The original (Contract Sum)	$ 6,180,368.11
Net change by previously authorized Change Orders	$ 0.00
The contract sum prior to this Change Order was	$ 6,180,368.11
The contract sum would be changed by this Change Order in the amount of	($141,085.15)
The new contract sum including this Change Order will be	$ 6,039 282.96
The contract time will be increased by this Change Order by 3 days	

CITY OF JACKSONVILLE - DEPARTMENT OF PUBLIC WORKS	**STELLAR GROUP, INCORPORATED**
Owner	Contractor
Signed and Dated	Signed and Dated
By: Daryl Weinstein	By: Scott Wright
Project Manager	Project Manager

Item 1

Tree Mitigation Allowance - Original	**$28,650.00**
COJ Tree Mitigation Costs	$13,378.30
JEA Utility Fees beyond JEA Allowance	$13,638.52
Tree Mitigation Allowance - Remaining	**$1,633.18**

City of Jacksonville
Department of Planning and Development
Building Inspection Division

Item 1

TRANSACTION RECEIPT

Order ID:	10366233		
Order total:	$13,378.30		
Date paid:	1/25/2023 3:05:12PM	Company:	Stellar Group Inc
Payment method:	American Express	Name:	Richard Lovelace

Transaction #	Details	Amount
4798751	Permit Fees for L22-596190.000 Tree Mitigation	$13,052.00
Convience Fee:		$326.30

Total $13,378.30

Scott Wright

Item 1

From: Weinstein, Daryl <DWeinstein@coj.net>
Sent: Wednesday, August 23, 2023 9:36 AM
To: Scott Wright
Cc: Dominic Ciacelli; Tim Jenkins
Subject: RE: Fire Station 64 JEA Utility Fees & Allowances

That works for me.

Dominic, lets make sure we have it clearly documented.

Thank you.

Daryl Weinstein
Construction Project Manager
City of Jacksonville |Engineering and Construction Management Division
214 N. Hogan Street, 10th Floor
Jacksonville, FL 32202
Office: 904-255-8925
Cell: 904-588-6020

From: Scott Wright <swright@stellar.net>
Sent: Tuesday, August 22, 2023 5:46 PM
To: Weinstein, Daryl <DWeinstein@coj.net>
Cc: Dominic Ciacelli <dciacelli@via-cs.com>; Tim Jenkins <tjenkins@stellar.net>
Subject: Fire Station 64 JEA Utility Fees & Allowances
Importance: High

EXTERNAL EMAIL: This email originated from a non-COJ email address. Do not click any links or open any attachments unless you trust the sender and know the content is safe.

Good evening Daryl. Please see attached JEA water/irrigation/fire/sewer fees due for service for Fire Station 64 in the amount of $73,638.52. As discussed at today's OAC meeting we will fund the additional $38,638.52 over and above the JEA Utility Allowance of $35k from the COJ Access Control Headend Equipment Allowance and the remaining Tree Mitigation Allowance unless you direct us otherwise. See below summary for clarification.

We will pay the JEA fees this week or early next and bill these amounts on the allowance line items on the August pay application.

Description	$ Amount
JEA Water/Irrigation/Fire/Sewer Fees	$73,638.52
JEA Utility Allowance	($35,000.00)
COJ Access Control Headend Equipment Allowance	($25,000.00)
Tree Mitigation Allowance $28,650 original - $13,378.30 tree mitigation spent = $15,271.70 remaining - $13,638.52 JEA partial fees = $1,633.18 remaining Tree Mitigation Allowance	($13,638.52)

$0.00

Thank you!

Scott Wright
Project Manager III
Stellar
o : 904-899-9808 | m : 904-832-3201
e : swright@stellar.net

This email and any attachments are confidential and intended solely for the use of the intended recipients; unauthorized use is strictly prohibited. If you have received this email in error please notify the sender immediately. Unless otherwise stated, opinions expressed in this e-mail are those of the author and are not endorsed by the author's employer. Finally, the recipient should check this email and any attachments for the presence of viruses. The company accepts no liability for damage caused by any virus transmitted by this email.

11/31/2024

FS64 Material Price Escalation
Contingency Log

stellar
DRIVING SOLUTIONS FURTHER

Contingency	$297,548.00
Spent	$158,096.03
Remaining Contingency	$139,451.97

Item 2

Division #	Scope of Work	Subcontractor	Bid Day $	Revised $	$ Increase	Date Revised	Notes	Pay App 4	Pay App 5	Pay App 6	Pay App 7	Pay App 8	Pay App 9	Pay App 10	Pay App 11	Pay App 12	Pay App 13	Billed	Remaining to be Billed
3	Concrete	Mallen Construction	$310,500.00	$339,500.00	$26,430.00	11/14/2022				15,000.00	3,430.00				8,000.00			$26,430.00	$0.00
4	Masonry	Barken Construction	$295,850.00	$406,375.00	$10,525.00	11/4/2022				10,525.00								$10,525.00	$0.00
26	Electrical	Coastal Electric	$850,716.00	$865,369.00	$14,653.00	11/14/2022	Generator $9,710, Misc $4,943				9,710.00			4,943.00				$14,653.00	$0.00
23	HVAC	Weather Engineers	$326,102.00	$332,546.00	$6,444.00	11/30/2022								6,444.00				$6,444.00	$0.00
9	Drywall/Acoustical Ceilings	Acoustil / Lasa Const	$157,584.00	$172,000.00	$14,416.00	12/7/2022	Acoustil low bid day, repriced $179,000+, Lasa repriced at $172,000					14,416.00						$14,416.00	$0.00
9	Paint	Crystal Klean (Belet's)	$24,250.00	$25,850.00	$1,600.00	12/12/2022								1,600.00				$1,600.00	$0.00
10	Wood Lockers	Hoffman, Inc	$33,373.00	$36,783.00	$3,410.00	12/15/2022									3,410.00			$3,410.00	$0.00
21	Fire Protection System	Wignnton Fire Systems	$74,399.00	$98,622.00	$24,223.00	12/12/2022						24,223.00						$24,223.00	$0.00
60	Permit Fees		$7,500.00	$8,528.49	$1,028.49	2/22/2023	Permit Fee Allowance Overage	1,028.49										$1,028.49	$0.00
31	PG76-22 Asphalt Mix Design	DHS Contracting			$8,934.16	5/24/2023	Asphalt mix design chang to PG76-22								8,934.16			$8,934.16	$0.00
22	Credit six (6) undermount L-2 Sinks	Gary Rodgers Plbg			$(3,020.00)		Chief approved 2.14.2023							(3,020.00)				-$3,020.00	$0.00
6	Furnish & install six (6) Wilson Art AV1812 Integral solid surface sinks into solid surface vanity tops at rooms 115, 120 and 124. The sinks will be white or off white and will not match the countertops.	Antique & Modern			$2,140.00		Chief approved 2.14.2023							2,140.00				$2,140.00	$0.00
6	Add 5" Valance at Top of Upper Kitchen Cabinets	Antique & Modern			$380.00		Chief approved 3.3.2023							380.00				$380.00	$0.00
31	Reroute water/irrigation lines to reuse existing JEA meters.	DHS Contracting			$3,398.00		CDI approved 3.27.2023						3,398.00					$3,398.00	$0.00
23	Add 4" filter housing & MERV 16 Filter to AHU-4 that serves the Bunker Gear Rm 129 per Owner direction.	Weather Engineers			$1,513.00		Chief approved 3.30.2023						1,513.00					$1,513.00	$0.00
32	Add Single 6'w x 8' h Swing Gate for Maintenance Access to Wooded Property	Duval Fence			$2,527.00		Chief approved 4.13.2023								2,527.00			$2,527.00	$0.00
22	Change EWH 1 to 80 gallon water heater in lieu of 50 gallon.	Gary Rodgers Plbg			$3,275.00		CDI approved 6.12.2023							3,275.00				$3,275.00	$0.00
6	Furnish & Install pvc edge band at all laminate countertops.	Antique & Modern			$1,167.00		CDI approved 6.15.2023							1,167.00				$1,167.00	$0.00
9	Level 5 drywall finish.	Lasa Construction			$2,346.00		CDI approved 6.23.2023						2,346.00					$2,346.00	$0.00
1	Additional GC's (partial)	Stellar			$7,806.30		CDI approved 10.24.2023									7,806.30		$7,806.30	$0.00
32	Replace Mulch w/Stone	Costa Verde			$2,500.00		JFRO approved 10.25.2023									2,500.00		$2,500.00	$0.00
7	Caulk Slab Cut Joints	S. David Flooring			$20,400.08		JFRO approved 11.21.2023										20,400.08	$20,400.08	$0.00
				Total Spent	$158,096.03			$1,028.49	$0.00	$25,525.00	$13,140.00	$38,639.00	$7,257.00	$18,929.00	$22,871.16	$10,306.30	$20,400.08	$158,096.03	$0.00

Scott Wright

From: Manny Williams <Mwilliams@mallenconstruction.com>
Sent: Wednesday, March 15, 2023 12:26 PM
To: Scott Wright
Subject: RE: Fire Station 64_Mallen Proposal_ 7.29.22.pdf

Item 2

Below is the breakdown for the price increase:

Argos implemented an aggregate fee to cover the increase of the cost to acquire the raw materials for ready mix concrete.
We had a price increase for ready mix concrete in December
Rebar prices and accessories were increased
We added additional costs to the project for additional labor and miscellaneous materials increases.

Item	Cost
Add for Argos Aggregate Fee	$6,680.00
December Concrete Increase	$16,690.00
Rebar Materials & Accessories Increase	$2,070.00
~~Labor Cost Increase~~	~~$2,570.00~~
Misc Materials Increase	$990.00
Total:	~~$29,000.00~~

$26,430.00

Manny Williams
Estimator

MALLEN CONSTRUCTION, INC.

10702 Hood Road South #8
Jacksonville FL 32257-3244
Phone: 904 880 5580 ext 307
mwilliams@mallenconstruction.com
www.mallenconstruction.com

Item 2

Scott Wright

From: Eric Kelly <eric@ekbmasonry.com>
Sent: Wednesday, March 8, 2023 5:31 AM
To: Scott Wright
Subject: RE: Fire Station 64

Scott,
The increase from original Proposal dated July 27th, 2022, to proposal dated November 4th, 2022, was from the cost of materials going up.
The architectural colored split face priced increased.
Cost of concrete per yard increased.
And the Cost of colored Portland Lime Mortar increased.
These are just the main material that increased in cost.

Eric Kelly
Vice President
EK Birken Masonry Inc.
Cell – 904-805-3770
Office – 904-746-3335
eric@ekbmasonry.com
11747 Phillips Hwy Suite 301
Jacksonville, FL 32256
EKB MASONRY
BRICK • BLOCK • STONE

From: Scott Wright <swright@stellar.net>
Sent: Tuesday, March 7, 2023 4:19 PM
To: Eric Kelly <eric@ekbmasonry.com>
Subject: FW: Fire Station 64

Eric, please provide clarification on the $10,525 increase from your original proposal. I need to provide clarification to COJ. Thank you.

stellar
Scott Wright
Project Manager III
Stellar
o : 904-899-9808 | m : 904-832-3201
e : swright@stellar.net

From: Eric Kelly <eric@ekbmasonry.com>
Sent: Friday, November 4, 2022 8:40 AM
To: Scott Wright <swright@stellar.net>
Subject: Fire Station 64

Scott,
Here is the revised proposal for Fire Station 64. Let me know if you have any questions.

Item 2

Eric Kelly
Vice President
EK Birken Masonry Inc.
Cell – 904-805-3770
Office – 904-746-3335
eric@ekbmasonry.com
11747 Phillips Hwy Suite 301
Jacksonville, FL 32256

EKB MASONRY
BRICK · BLOCK · STONE

This email and any attachments are confidential and intended solely for the use of the intended recipients; unauthorized use is strictly prohibited. If you have received this email in error please notify the sender immediately. Unless otherwise stated, opinions expressed in this e-mail are those of the author and are not endorsed by the author's employer. Finally, the recipient should check this email and any attachments for the presence of viruses. The company accepts no liability for damage caused by any virus transmitted by this email.

Item 2

Coastal Electric Company
of Florida

2759 St Johns Bluff Road
Jacksonville, Florida 32246
Electrical Contractors EC0000938
Telephone No (904) 645-0026
Facsimile No (904) 645-6186

March 15, 2023

Stellar Group
2900 Hartley Road
Jacksonville, FL 32257

Attention: Mr. Scott Wright

Reference: **COJ Station 64 Material Escalation**

Dear Sir:

I would like to clarify the increase of $4,943.00 for miscellaneous material when we repriced the revised prints on 11/14/2022. As you are aware mid to the end of 2022, we had many price increases below are a list of the larger items.

1. PVC conduit and fittings.
2. Copper wire (all sizes).
3. EMT conduit and fittings.

The above items with tax, had an increased totaling that amount.

Sincerely,
Coastal Electric Company of Florida

Stephen Giannelli
Senior Project Manager

Coastal Electric Company
of Florida

2759 St Johns Bluff Road
Jacksonville, Florida 32246
Electrical Contractors EC0000938
Telephone No (904) 645-0026
Facsimile No (904) 645 6186

Item 2

November 14, 2022

Stellar Group
2900 Hartley Road
Jacksonville, FL 32257

Bid Day Quote $850,716 7.29.2022
Material price increase $14,653.00
(Generator $9,710 Misc $4,943)

Attention: Mr. Scott Wright

Reference: COJ Station 64 Budget Proposal 100% Prints REVISED ON 11/14/2022

Dear Sir:

We offer this **Budget Proposal $865,369** to provide and install all necessary labor and materials for electrical work associated with the above referenced project. Installation will be in accord with standard construction practices, scope of work and subject to the following clarifications.

Documents:

- Plan Sheets E-001, E-002, E-003, E-004, E-005, E-006, E-100, E-101, E-201, E-202, E-301, E-401, E-402, E-501, E-502, E-503, E-504, ET-001, ET-101, ET-102and M-001 dated 05-31-2022
- Addendum none
- Revision # 5

Inclusions:

1. One Year Warranty.
2. All necessary permits, taxes, and insurance.
3. Standard fire calking where required, for electrical penetrations.
4. Trash and debris collected daily and deposited in dumpster provided by the general contractor.
5. Temporary power for one jobsite trailer, adequate work area lighting and power for small tools, based on utility power being available within 100' of the building. Lighting is included to meet minimum OSHA and Code requirements. No provisions are made for early hookup of HVAC, welders, or elevators prior to availability of permanent power.
6. The extent of the work pertaining to the fixtures, electrical panels and other electrical components of any type is limited to what is shown on the electrical drawings.
7. Specified interior and site lighting package.
8. Specified lighting controls.
9. Specified Tradewinds generator from Szoke Power Systems.
10. Specified 600 amp gear.
11. One (1) 400 amp shunt trip breaker in the MDP.
12. Specified lightning protection.
13. Full conduit fire alarm system.
14. Emergency responder radio signal strength test.
15. Structure cabling and paging system.
16. 100 KW Tradewinds generator with fuel for testing.
17. 208 volt 80 amp 3 phase power to the lift station controller.

Item 2

Coastal Electric Company of Florida

2759 St Johns Bluff Road
Jacksonville Florida 32246
Electrical Contractors EC0000938
Telephone No (904) 645-0026
Facsimile No (904) 645 6186

18. JEA primary conduit as specified.
19. Primary phone conduit as specified.
20. 2 @ 2" traffic empty conduit.
21. Mechanical disconnects and controls as specified.
22. Copper wiring for all feeders and branch circuits.

Exclusions:

23. Access panels.
24. Allowances.
25. Dewatering.
26. Access Control System.
27. UPS System & wiring.
28. A/V Systems & wiring.
29. Direct buried conduit detail on print E-504 dated 10/19/2021.
30. Fire Alarm BDA System. If required after surveying finished building per fire marshal requirements.
31. Underground jacking or boring.
32. Payment and performance bond.
33. Utility fees or Power consumption.
34. Surveying or layout for site lighting.
35. Mechanical control wiring or raceways.
36. Waste disposal, dumpster, or disposal fees.
37. Cutting, patching, painting, sealing, of pavement or roof penetrations and pitch pockets.
38. Concrete work. (Utility transformer pads, housekeeping pads, bollards, encasement, etc.)

Clarifications:

- Pricing will be held for 30 days of dated proposal.
- **The Tradewinds generator price is only good till 11/29/22. $110,910**
- Tradewinds requires $55,470.00 down payment when ordered.
- Based on current market conditions - It is intended that delivery & installation of all switch gear & fixtures take place within an (agreed upon schedule) after the date approval of shop drawings & placement of order with the factory. Since switch gear and fixtures are custom made, a backlog at the factory, shipping delays or other factors may hamper delivery in a timely manner. Therefore, Coastal Electric Company of Florida assumes no responsibility for delays nor the failure to deliver work on a particular date."

Sincerely,
Coastal Electric Company of Florida

Stephen Giannelli
Project Manager

Item 2

Coastal Electric Company
of Florida

2759 St Johns Bluff Road
Jacksonville Florida 32246
Electrical Contractors EC0000938
Telephone No (904) 645 0026
Facsimile No (904) 645 6186

July 28, 2022

Stellar Group
2900 Hartley Road
Jacksonville, FL 32257

Attention: Mr. Scott Wright

Reference: **COJ Station 64 Budget Proposal 90% Prints REVISED ON 07/29/2022**

Dear Sir:

We offer this **Budget Proposal $850,716** to provide and install all necessary labor and materials for electrical work associated with the above referenced project. Installation will be in accord with standard construction practices, scope of work and subject to the following clarifications.

Documents:

- Plan Sheets E-001, E-002, E-003, E-004, E-005, E-006, E-100, E-101, E-201, E-202, E-301, E-401, E-402, E-501, E-502, E-503, E-504, ET-001, ET-101, ET-102and M-001 dated 05-31-2022
- Addendum none
- Revision # 5

Inclusions:

1. One Year Warranty.
2. All necessary permits, taxes, and insurance.
3. Standard fire calking where required, for electrical penetrations.
4. Trash and debris collected daily and deposited in dumpster provided by the general contractor.
5. Temporary power for one jobsite trailer, adequate work area lighting and power for small tools, based on utility power being available within 100' of the building. Lighting is included to meet minimum OSHA and Code requirements. No provisions are made for early hookup of HVAC, welders, or elevators prior to availability of permanent power.
6. The extent of the work pertaining to the fixtures, electrical panels and other electrical components of any type is limited to what is shown on the electrical drawings.
7. Specified interior and site lighting package.
8. Specified lighting controls.
9. Specified Tradewinds generator from Szoke Power Systems.
10. Specified 600 amp gear.
11. One (1) 400 amp shunt trip breaker in the MDP.
12. Specified lightning protection.
13. Full conduit fire alarm system.
14. Emergency responder radio signal strength test.
15. Structure cabling and paging system as per print ET-001 dated 05-31-2022.
16. 100 KW Tradewinds generator with fuel for testing.
17. 208 volt 80 amp 3 phase power to the lift station controller.

Item 2

Coastal Electric Company of Florida

2759 St Johns Bluff Road
Jacksonville Florida 32246
Electrical Contractors EC0000938
Telephone No (904) 645-0026
Facsimile No (904) 645 6186

18. JEA primary conduit as specified.
19. Primary phone conduit as specified.
20. 2 @ 2" traffic empty conduit.
21. Mechanical disconnects and controls as specified.
22. Copper wiring for all feeders and branch circuits.

Exclusions:

23. Access panels.
24. Allowances.
25. Dewatering.
26. Access Control System.
27. UPS System & wiring.
28. A/V Systems & wiring.
29. Direct buried conduit detail on print E-504 dated 10/19/2021.
30. Fire Alarm BDA System. If required after surveying finished building per fire marshal requirements.
31. Underground jacking or boring.
32. Payment and performance bond.
33. Utility fees or Power consumption.
34. Surveying or layout for site lighting.
35. Mechanical control wiring or raceways.
36. Waste disposal, dumpster, or disposal fees.
37. Cutting, patching, painting, sealing, of pavement or roof penetrations and pitch pockets.
38. Concrete work. (Utility transformer pads, housekeeping pads, bollards, encasement, etc.)

Clarifications:

- Pricing will be held for 30 days of dated proposal.
- **The Tradewinds generator price is only good till 08/09/22. $101,230**
- Tradewinds requires 50% down payment when ordered.
- Based on current market conditions - It is intended that delivery & installation of all switch gear & fixtures take place within an (agreed upon schedule) after the date approval of shop drawings & placement of order with the factory. Since switch gear and fixtures are custom made, a backlog at the factory, shipping delays or other factors may hamper delivery in a timely manner. Therefore, Coastal Electric Company of Florida assumes no responsibility for delays nor the failure to deliver work on a particular date."

Sincerely,
Coastal Electric Company of Florida

Stephen Giannelli

Stephen Giannelli
Project Manager

Szoke Power Systems, Inc.
PO Box 8897
Fleming Island, FL 32006
USA

Voice: 904 487 9515
Fax:

Item 2

INVOICE

Invoice Number: 111122JFRD64Coastal
Invoice Date: Nov 11, 2022
Page: 1

Duplicate

Bill To:	Ship to:
Coastal Electric Company of Florida 2759 St Johns Bluff Road S Jacksonville, FL 32246 USA	Coastal Electric Company of Florida 2759 St Johns Bluff Road S Jacksonville, FL 32246 USA

Customer ID	Customer PO	Payment Terms	
Coastal Electric Co		Net 30 Days	
Sales Rep ID	**Shipping Method**	**Ship Date**	**Due Date**
	Best Way		12/11/22

Quantity	Item	Description	Unit Price	Amount
1.00		Tradewinds Power Corp TP100E-UL60T3G 100kw generator set, 208/120 vac, 3 phase, UL2200 listed, with 500 gallon UL142 base tank, 2 part epoxy coated. Marine grade .090 thick aluminum enclosure, (white) quiet model, curbside shipping included, non-proprietary software, PMG exciter, DVR, battery, DC lighting Estop break glass style, remote annunciator, 80% rated 400 amp circuit breaker with shunt trip installed.	84,000.00	84,000.00
2.00		Two years maintenance annual PMs,(does not include hurricane PMs for extended outages).	495.00	990.00
2.00		Resistive load bank testing for 2 years	1,000.00	2,000.00
1.00		Thomson Technologies, automatic transfer switch, 600 amp, 208/120 vac, 3 pole, 4 wire, NEMA 1 enclosure, NON SE rated, factory refused lead time (Canadian)	7,800.00	7,800.00
1.00		Berthold Load bank connection cabinet, 800 amp, 208/120 vac, female camloc,	7,800.00	7,800.00

Subtotal	Continued
Sales Tax	Continued
Total Invoice Amount	Continued
Payment/Credit Applied	
TOTAL	**Continued**

Check/Credit Memo No:

Szoke Power Systems, Inc.
PO Box 8897
Fleming Island, FL 32006
USA

Voice: 904 487 9515
Fax:

Item 2

INVOICE

Invoice Number: 111122JFRD84Coastal
Invoice Date: Nov 11, 2022
Page: 2
Duplicate

Bill To:
Coastal Electric Company of Florida
2759 St Johns Bluff Road S
Jacksonville, FL 32246
USA

Ship to:
Coastal Electric Company of Florida
2759 St Johns Bluff Road S
Jacksonville, FL 32246
USA

Customer ID	Customer PO	Payment Terms	
Coastal Electric Co		Net 30 Days	
Sales Rep ID	**Shipping Method**	**Ship Date**	**Due Date**
	Best Way		12/11/22

Quantity	Item	Description	Unit Price	Amount
1.00		#W08-3S-F79, NEMA 3R, Four hour resistive load bank testing, and two hour load bank test	1,000.00	1,000.00
1.00		Start up by Szoke Power System, Inc. as per manufacturer representative	1,000.00	1,000.00
		Down payment required is $55,470, that will satisfy the 50% deposit. As equipment arrives, the balances and sales taxes will be required, before pick up. Tradewinds generator is delivered to jobsite, other items require pick up in GCS or OP area.		

Subtotal	104,590.00
Sales Tax	6,350.40
Total Invoice Amount	110,940.40
Check/Credit Memo No: Payment/Credit Applied	
TOTAL	**110,940.40**

Scott Wright

From: Frank Barberi <fbarberi@weatherengineers.com>
Sent: Wednesday, March 8, 2023 8:09 AM
To: Scott Wright
Subject: RE: Fire Station 64 Quote/Subcontract

Item 2

Hi Scott,

The difference in cost was due to an increase from Stan Weaver $1,720 and Trane $3,700. Duct & misc $1,024.
I left our OH&P the same as it was for the 7/29 bid.

Keep in mind that last year prices were going up on a monthly basis.

Thank you,

Frank

Frank Barberi
Commercial Construction Division
fbarberi@weatherengineers.com
904-219-1244 Mobile
904-356-3963 Office

Weather Engineers, Inc.
904-356-3963
www.WeatherEngineers.com

INDOOR COMFORT
The Good Air People

From: Scott Wright [mailto:swright@stellar.net]
Sent: Tuesday, March 07, 2023 5:24 PM
To: Frank Barberi <fbarberi@weatherengineers.com>
Subject: FW: Fire Station 64 Quote/Subcontract

Hi Frank. Can you please provide clarification of the $6,444 price increase over your origin bid price dated 7.29.2022? I need to provide the Owner COJ with clarification of cost increase.

Thank you!

stellar

Scott Wright
Project Manager III
Stellar
o : 904-899-9808 | m : 904-832-3201
e : swright@stellar.net

Item 2

From: Frank Barberi <fbarberi@weatherengineers.com>
Sent: Wednesday, November 30, 2022 8:39 AM
To: Scott Wright <swright@stellar.net>
Cc: Rob Lenhoff <RLenhoff@weatherengineers.com>
Subject: RE: Fire Station 64 Quote/Subcontract

Scott,

Please see attached Revised Proposal for the HVAC work for the above referenced project. This proposal is based on current pricing and is valid for 30 days.

Thank you,

Frank

Frank Barberi
Commercial Construction Division
fbarberi@weatherengineers.com
904-219-1244 Mobile
904-356-3963 Office

Weather Engineers, Inc.
904-356-3963
www.WeatherEngineers.com

INDOOR COMFORT
The Good Air People

Item 2

ACOUSTI ENGINEERING COMPANY OF FLORIDA
CGC-021583 www.acousti.com
JACKSONVILLE BRANCH
6959 STUART AVE JACKSONVILLE, FL 32254
904-781-9355

To:	**Stellar Group**	Date:	**8.5.2022**
Attention:	**Spencer Draper**	Address:	**10865 Harts Rd, Jacksonville FL 3221**
Phone:	**904.899.9464**	Orig. Plan Date:	**5.31.2022**
Email:	Sdraper@stellar.net	Architect:	**PQH group**
Job:	**Fire Station 64**	Addendum(s):	

Thank you for allowing Acousti Engineering the opportunity of bidding this project for you. The pricing below is based on bid documents datec **7.22.2022**. All work bid is per these documents unless otherwise noted in this proposal.

- 092500 - DRYWALL $107,818.00
- 095000 - ACOUSTICAL CEILINGS $50,036.00

Acousti repriced 12.1.2022 @ $179,000 Stellar had Lasa Construction reprice it on 12.7.2022 and came in at $172,000. Material increase price of $14,146.

Original Bid $Amount

BASE BID VALUE - **$157,854.00**

Scopes, terms, conditions, and qualifications as specifically outlined in Acousti's proposal shall be considered included and incorporates all conditions of said proposal with the clear understanding that they are part of the Agreement. Purchaser's acceptance of the intent of this proposal whether by this form or otherwise incorporates all conditions of this proposal. Subject to purchaser's acceptance by an authorized office or agent, within Thirty (30) says from date hereof.

Respectfully Submitted,

Acousti Engineering Company

John Cappock - Project Manager

Initial: _____

Item 2

GENERAL CLARIFICATIONS:

1. Scaffolding / access for our work is included.
2. Distribution of our materials into and throughout the structure is included.
3. Daily cleanup of our work is included. Trash will be removed to Dumpster (provided by GC).
4. Adequate temporary lighting to perform work is by others.
5. Sealing of through-wall penetrations by others.
6. Work to be performed during normal working hours. Overtime premium is not included.
7. Lasa Construction reserves the right to further review all contract language and schedule for this project.

This Proposal is valid for **30 (THIRTY) days** from date of bid.

TOTAL BID AMOUNT **$172,000.00**

(Break Out Below for Analysis ONLY)

Framing & Drywall	$ 121,110.00
ACT	$ 50,200.00
FRP	$ 690.00

We appreciate your business...

Acceptance: _____ Date: _____

Authorized by:

Acceptance: _____ Date: _____

Joe Hernandez, Manager

Item 2

Scott Wright

From: J. Stewart Belet Jr. <stewart@krystalklean.com>
Sent: Wednesday, March 8, 2023 9:17 AM
To: Scott Wright
Subject: FW: Fire Station64 Updated Proposal

Scott

The increase in cost was due to Paint, Caulk and Sundry cost increasing between the bid date and the contract/start time.

Thank you,

Stewart Belet
General Manager 74B
stewart@krystalklean.com
C: (904) 729-0860
O: 877-87-KLEAN (877-875-5326)
KrystalKlean.com

From: Scott Wright <swright@stellar.net>
Sent: Tuesday, March 7, 2023 5:58 PM
To: J. Stewart Belet Jr. <stewart@krystalklean.com>
Subject: FW: Fire Station64 Updated Proposal

Stewart please provide an explanation for the $1,600 price increase over your original bid proposal from Belet's. I have to clarify for COJ. Thank you.

Scott Wright
Project Manager III
Stellar
o : 904-899-9808 | m : 904-832-3201
e : swright@stellar.net

From: J. Stewart Belet Jr. <stewart@krystalklean.com>
Sent: Monday, December 12, 2022 2:04 PM
To: Scott Wright <swright@stellar.net>
Subject: Fire Station64 Updated Proposal

Item 2

Please see attached updated proposal.

Thank you,

Stewart Belet
General Manager 74B
stewart@krystalklean.com
C: (904) 729-0860

A division of Krystal Klean: 74B
www.Beletsinc.com

This email and any attachments are confidential and intended solely for the use of the intended recipients; unauthorized use is strictly prohibited. If you have received this email in error please notify the sender immediately. Unless otherwise stated, opinions expressed in this e-mail are those of the author and are not endorsed by the author's employer. Finally, the recipient should check this email and any attachments for the presence of viruses. The company accepts no liability for damage caused by any virus transmitted by this email.

HOLLMAN
SINCE 1976

1825 W. Walnut Hill Lane, Irving, Texas 75038
Tel: (972) 815-4000, Fax: (972) 815-2921
www.hollman.com

Item 2

Sales Quote

Increase $3,410 from bid quote

Quote No.:	SQL-202363
Quote Date:	12/15/2022
Revised Date:	
Sales Contact:	Taylor Webb
Email:	taylor@hollman.com
Phone:	(972) 815-4055

Sell To :
Stellar Group, Inc
7698 Bailey Body Road
Jacksonville, FL 32216
Contact:Scott Wright
Phone:904.899.9808
Fax:
Email:swright@stellar.net

Ship To :
214 N Hogan St.
Jacksonville, FL 32202
Contact:
Phone:
Fax:
Email:

Project Name	Payment Terms	Est. Ship Date
Fire Station 64 - City of Jacksonville	50% Deposit, 50% Two Weeks Prior to Shipment	

Door Style:	Louvered Raised Panel Door	**Locker Interior:**	White with Matching Edging Melamine : Please Confirm - Almond Discontinued
Wood Species:	Maple 1"	**2mm Edgeband:**	N/A
Stain Color:	Clear	**Lock Type:**	: Keylock
Laminate Color:		**Hardware Finish:**	Satin Nickel
LEED/FSC Mix:	No	**Numbering:**	

Quantity	Description	Dimensions	Unit Price	Amount
	*** Almost Identical Locker Spec as LJ-151893 *** *** AWI Premium Certified *** Soft Closing Hinges [European Style] *** Chrome Number Discs Included With Lockers *** 1" Thick Doors - Hollman Standard			
	Installation			
1	Non – Union/Non - Prevailing Wage Locker Installation *** Installation Includes 2"x6" Unfinished Base & Offloading			$5,118.00
	Lockers			
37	Single Tier; Model A Locker 1-Recessed Shelves, 1-Coat Hooks, 1-Coat Rods	84"H x 24"W x 24"D		$17,834.00
	Pantry Lockers W/Adjustable Shelf			
3	Single Tier; Model A Locker 5-Recessed Shelves, 1-Coat Hooks, 1-Coat Rods	84"H x 24"W x 24"D		$1,569.00
	Locks			
40	CompX 5 Pin/5-Pin Keylocks Door Thickness: 1 inch thick door			$1,120.00
	Pulls			
40	Wire Pull Satin Nickel 3.5" C to C			$80.00
	Locker Trim			
3	Flush Veneer Filler Panel [24"W = Up to Four 6" Cuts]	24"W x 84"H		$633.00
1	Veneer Raised Double End Panel	46.5"W x 84"H		$535.00

HOLLMAN
SINCE 1976
1825 W. Walnut Hill Lane, Irving, Texas 75038
Tel: (972) 815-4000, Fax: (972) 815-2921
www.hollman.com

Item 2

Sales Quote

Quote No.: SQL-202363
Quote Date: 12/15/2022
Revised Date:
Sales Contact: Taylor Webb
Email: taylor@hollman.com
Phone: (972) 815-4055

Quantity	Description	Dimensions	Unit Price	Amount
3	Veneer Raised Single End Panel	23.25"W x 84"H		$831.00
10	Pre-Assembled Unfinished Base (8-ft) 96-L, 21-D, 6-H			$150.00
14	Veneer Base Trim (8 ft) [6"H]	6"H		$1,302.00
1	**Freight** FTL Freight - Ship to: 214 N Hogan St, Jacksonville, FL 32202 1-Trucks Transloading: Excluded, Palletized: Yes			$5,340.00
	*** Applicable Charges = Sales Tax @ 9.5% ***			

Subtotal: $34,512.00
Applicable Charges: $2,270.88
Total Estimate (USD): $36,782.88
Price Valid for 30 Days

Accepted By: _____ **Date:** _____

Subtotal: $31,419.00
Applicable Charges: $1,953.87
Total Estimate (USD): $33,372.87
Bid Day Quote **Price Valid for 30 Days**

Increase $3,410

HOLLMAN
SINCE 1976
1825 W. Walnut Hill Lane, Irving, Texas 75038
Tel: (972) 815-4000, Fax: (972) 815-2921
www.hollman.com

Item 2

Sales Quote

Quote No.:	SQL-202363
Quote Date:	12/15/2022
Revised Date:	
Sales Contact:	Taylor Webb
Email:	taylor@hollman.com
Phone:	(972) 815-4055

Comments:

By signed acceptance of the above quote, customer is agreeing to the below terms and conditions.

Terms and Conditions

Payment Terms and Pricing. All prices and charges listed are valid for 30 days prior to quote acceptance. Leasing/payment options available - please contact your Hollman representative for additional information. Alternate payment terms must be approved prior to quote acceptance. The prices listed are subject to proportionate increases to meet increased cost of supplies or operations due to market/supply chain fluctuations for orders accepted more than 90 days in advance of delivery.
- 50% deposit is required on all standard orders upon release to production unless otherwise specified on order.
- A late service charge of 1% per month is subject to past due invoices.
Customer is responsible for all legal and/or collection fees incurred by Hollman, Inc. to collect past due balances owed. Hollman, Inc. retains the right to repossess all merchandise 90 days after invoice due date.

Taxes. All applicable sales tax is required to be included on all invoices unless valid tax exemption certificate or reseller certificate is provided.

Layouts & Drawings. $1,500 charge will apply for locker layouts on non-Hollman, Inc. install projects. Standard shop drawings will be included on all orders outside of the Essentials Collection.

Change orders. All change orders must be approved prior to production and in a timely manner. Change orders or delays in approvals of change orders may disrupt original delivery window or cause project delays.

Cancellations. A cancellation fee applies to all orders cancelled prior to production. Customer agrees to pay a cancellation fee equal to of 25% of total order or $1,500 plus $500 per set of drawings/revisions submitted to customer, whichever amount is greater. In addition to the cancellation fee, customer agrees to reimburse Hollman, Inc. for any material purchased for canceled order. The reimbursement amount will be calculated as material cost (including freight, tax, and/or duties) plus a 15% restocking/overhead fee. Due to the nature of our manufacturing process, orders cannot be cancelled once they are in production. 100% charge will apply for cancellations placed after order is moved into production.

Freight & Accommodations. Customer agrees to keep Hollman, Inc. fully informed of any necessary accommodations which could incur associated costs, such as but not limited to: lift gate/ramp, trans-loading to a smaller truck (site cannot accommodate a 53' air ride trailer), weekend/holiday deliveries, palletization of product, multi-phase delivery, union driver, offloading of material/third-party installation. Charges will apply for additional accommodations required. Freight prices listed are subject to proportionate increases to meet increased cost of supplies or operations due to market fluctuations.

Installation Adaptations, Compliance & Scheduling. Customer agrees to keep Hollman, Inc. fully informed of any necessary requirements, such as but not limited to: non-union/union/prevailing wage, city/state licenses, special access requirements (badging, certifications), in-use renovations, installation, or delivery on levels other than ground floor. Charges will apply for additional accommodations required. Once installation schedule is confirmed, changes to schedule will incur a $3,000 rescheduling fee.

Approvals. Hollman, Inc. shall not be responsible for costs or delays incurred due to customer's inability to gain approval for order. Responsibility of order approval lies with purchaser.

Delivery. On-site contact must be provided to Hollman, Inc. prior to shipping. Hollman, Inc.'s shipping partner will contact on-site contact prior to scheduled delivery. Customer must be present at the time of delivery/installation to acknowledge receipt and condition of the merchandise. Customer's failure to sign for receipt may result in redelivery and associated fees. Special delivery accommodations including but not limited to: inability to accommodate a 53 ft. trailer, transloading, etc. must be communicated to Hollman, Inc. in advance. See Accommodations. Additional fees may apply. Customer/site is responsible for offloading for all non-Hollman install jobs at time of delivery. Up to four hours is allotted for offloading or fees may be incurred. Any unsuccessful delivery of merchandise is subject to fees. Any issues or missing items must be relayed to Hollman, Inc. within 24 hours of receipt.

Dispute Resolution. Any controversy or claim arising out of or relating to order terms, or breach thereof shall be settled by arbitration. Customer and Hollman, Inc. agree and stipulate that this contract originated in the County of Dallas, State of Texas, and agree to mandatory jurisdiction and venue in Dallas County Texas or any claims, disputes, or actions regarding this contract.

Miscellaneous. In case any one or more of the provisions contained in the agreement shall for any reason be held invalid, illegal, or unenforceable in any respect, the remaining terms shall remain in place and will be honored by Hollman, Inc, and the customer. Hollman Inc. nor customer shall be required to perform any term, conditions, or covenant in this agreement so long as such performance is delayed or prevented by force majeure, which shall mean acts of God, strikes, lockouts, material or labor shortages or restrictions by any governmental authority, or any other cause not reasonably within the control of Hollman, Inc. or the customer and which by the exercise of due diligence of Hollman, Inc. or customer is unable, wholly or in part, to prevent or overcome.

By signing I am acknowledging that I've confirmed quantities, finishes, layouts & approve to proceed with the order as shown.

Approved By: _____ **Date:** _____

HOLLMAN
SINCE 1976

1825 W. Walnut Hill Lane, Irving, Texas 75038
Tel: (972) 815-4000, Fax: (972) 815-2921
www.hollman.com

Sales Quote

Item 2

Quote No.:	SQL-188573.3
Quote Date:	6/28/2022
Revised Date:	8/1/2022
Sales Contact:	Taylor Webb
Email:	taylor@hollman.com
Phone:	(972) 815-4055

Sell To :
Stellar Group, Inc
7698 Bailey Body Road
Jacksonville, FL 32216
Contact:Scott Wright
Phone:904.899.9808
Fax:
Email:swright@stellar.net

Ship To :
214 N Hogan St.
Jacksonville, FL 32202
Contact:
Phone:
Fax:
Email:

Project Name	Payment Terms	Est. Ship Date
Fire Station 64 - City of Jacksonville	50% Deposit, 50% Two Weeks Prior to Shipment	

Door Style:	Louvered Raised Panel Door	**Locker Interior:**	White with Matching Edging Melamine : Please Confirm - Almond Discontinued
Wood Species:	Maple	**2mm Edgeband:**	N/A
Stain Color:	Clear	**Lock Type:**	: Keylock
Laminate Color:		**Hardware Finish:**	Satin Nickel
LEED/FSC Mix:	No	**Numbering:**	

Quantity	Description	Dimensions	Unit Price	Amount
	*** Almost Identical Locker Spec as LJ-151893 *** *** AWI Premium Certified *** Soft Closing Hinges [European Style] *** Chrome Number Discs Included With Lockers *** 1" Thick Doors - Hollman Standard			
	Additional Charges			
1	Different Doors Swing			$1,000.00
	Installation			
1	Non – Union/Non - Prevailing Wage Locker Installation *** Installation Includes 2"x6" Unfinished Base & Offloading			$5,242.00
	Lockers			
37	Single Tier; Model A Locker 1-Recessed Shelves, 1-Coat Hooks, 1-Coat Rods	84"H x 24"W x 24"D		$14,726.00
	Pantry Lockers W/Adjustable Shelf			
3	Single Tier; Model A Locker 5-Recessed Shelves, 1-Coat Hooks, 1-Coat Rods	84"H x 24"W x 24"D		$1,317.00
	Locks			
40	CompX 5 Pin/5-Pin Keylocks Door Thickness: 1 inch thick door			$1,120.00
	Pulls			
40	Wire Pull Satin Nickel 3.5" C to C			$80.00
	Locker Trim			
3	Flush Veneer Filler Panel [24"W = Up to Four 6" Cuts]	24"W x 84"H		$468.00

HOLLMAN
SINCE 1976
1825 W. Walnut Hill Lane, Irving, Texas 75038
Tel: (972) 815-4000, Fax: (972) 815-2921
www.hollman.com

Item 2

Sales Quote

Quote No.: SQL-188573.3
Quote Date: 6/28/2022
Revised Date: 8/1/2022
Sales Contact: Taylor Webb
Email: taylor@hollman.com
Phone: (972) 815-4055

Quantity	Description	Dimensions	Unit Price	Amount
1	Veneer Raised Double End Panel	46.5"W x 84"H		$342.00
3	Veneer Raised Single End Panel	23.25"W x 84"H		$534.00
14	Veneer Base Trim (8 ft) [6"H]	6"H		$980.00
1	**Freight** FTL Freight - Ship to: 214 N Hogan St. Jacksonville, FL 32202 1-Trucks Transloading: Excluded, Palletized: Yes *** Applicable Charges = Sales Tax @ 9.5% ***			$5,610.00

Subtotal: **$31,419.00**
Applicable Charges: **$1,953.87**
Total Estimate (USD): **$33,372.87**
Price Valid for 30 Days

Accepted By: _____ **Date:** _____

HOLLMAN
SINCE 1776
1825 W. Walnut Hill Lane, Irving, Texas 75038
Tel: (972) 815-4000, Fax: (972) 815-2921
www.hollman.com

Item 2

Sales Quote

Quote No.:	SQL-188573.3
Quote Date:	6/28/2022
Revised Date:	8/1/2022
Sales Contact:	Taylor Webb
Email:	taylor@hollman.com
Phone:	(972) 815-4055

Comments:

By signed acceptance of the above quote, customer is agreeing to the below terms and conditions.

Terms and Conditions

Payment Terms and Pricing. All prices and charges listed are valid for 30 days prior to quote acceptance. Leasing/payment options available - please contact your Hollman representative for additional information. Alternate payment terms must be approved prior to quote acceptance. The prices listed are subject to proportionate increases to meet increased cost of supplies or operations due to market/supply chain fluctuations for orders accepted more than 90 days in advance of delivery.
- 50% deposit is required on all standard orders upon release to production unless otherwise specified on order.
- A late service charge of 1% per month is subject to past due invoices.
Customer is responsible for all legal and/or collection fees incurred by Hollman, Inc. to collect past due balances owed. Hollman, Inc. retains the right to repossess all merchandise 90 days after invoice due date.

Taxes. All applicable sales tax is required to be included on all invoices unless valid tax exemption certificate or reseller certificate is provided.

Layouts & Drawings. $1,500 charge will apply for locker layouts on non-Hollman, Inc. install projects. Standard shop drawings will be included on all orders outside of the Essentials Collection.

Change orders. All change orders must be approved prior to production and in a timely manner. Change orders or delays in approvals of change orders may disrupt original delivery window or cause project delays.

Cancellations. A cancellation fee applies to all orders cancelled prior to production. Customer agrees to pay a cancellation fee equal to of 25% of total order or $1,500 plus $500 per set of drawings/revisions submitted to customer, whichever amount is greater. In addition to the cancellation fee, customer agrees to reimburse Hollman, Inc. for any material purchased for canceled order. The reimbursement amount will be calculated as material cost (including freight, tax, and/or duties) plus a 15% restocking/overhead fee. Due to the nature of our manufacturing process, orders cannot be cancelled once they are in production. 100% charge will apply for cancellations placed after order is moved into production.

Freight & Accommodations. Customer agrees to keep Hollman, Inc. fully informed of any necessary accommodations which could incur associated costs, such as but not limited to: lift gate/ramp, trans-loading to a smaller truck (site cannot accommodate a 53' air ride trailer), weekend/holiday deliveries, palletization of product, multi-phase delivery, union driver, offloading of material/third-party installation. Charges will apply for additional accommodations required. Freight prices listed are subject to proportionate increases to meet increased cost of supplies or operations due to market fluctuations.

Installation Adaptations, Compliance & Scheduling. Customer agrees to keep Hollman, Inc. fully informed of any necessary requirements, such as but not limited to: non-union/union/prevailing wage, city/state licenses, special access requirements (badging, certifications), in-use renovations, installation, or delivery on levels other than ground floor. Charges will apply for additional accommodations required. Once installation schedule is confirmed, changes to schedule will incur a $3,000 rescheduling fee.

Approvals. Hollman, Inc. shall not be responsible for costs or delays incurred due to customer's inability to gain approval for order. Responsibility of order approval lies with purchaser.

Delivery. On-site contact must be provided to Hollman, Inc. prior to shipping. Hollman, Inc.'s shipping partner will contact on-site contact prior to scheduled delivery. Customer must be present at the time of delivery/installation to acknowledge receipt and condition of the merchandise. Customer's failure to sign for receipt may result in redelivery and associated fees. Special delivery accommodations including but not limited to: inability to accommodate a 53 ft. trailer, transloading, etc. must be communicated to Hollman, Inc. in advance. See Accommodations. Additional fees may apply. Customer/site is responsible for offloading for all non-Hollman install jobs at time of delivery. Up to four hours is allotted for offloading or fees may be incurred. Any unsuccessful delivery of merchandise is subject to fees. Any issues or missing items must be relayed to Hollman, Inc. within 24 hours of receipt.

Dispute Resolution. Any controversy or claim arising out of or relating to order terms, or breach thereof shall be settled by arbitration. Customer and Hollman, Inc. agree and stipulate that this contract originated in the County of Dallas, State of Texas, and agree to mandatory jurisdiction and venue in Dallas County Texas or any claims, disputes, or actions regarding this contract.

Miscellaneous. In case any one or more of the provisions contained in the agreement shall for any reason be held invalid, illegal, or unenforceable in any respect, the remaining terms shall remain in place and will be honored by Hollman, Inc, and the customer. Hollman Inc. nor customer shall be required to perform any term, conditions, or covenant in this agreement so long as such performance is delayed or prevented by force majeure, which shall mean acts of God, strikes, lockouts, material or labor shortages or restrictions by any governmental authority, or any other cause not reasonably within the control of Hollman, Inc. or the customer and which by the exercise of due diligence of Hollman, Inc. or customer is unable, wholly or in part, to prevent or overcome.

By signing I am acknowledging that I've confirmed quantities, finishes, layouts & approve to proceed with the order as shown.

Approved By: _____ **Date:** _____

Wiginton FIRE SYSTEMS

Item 2

March 15, 2023

Name: Scott Wright
Project: Fire Station 64
Address: 10865 Harts Rd.
City state Jacksonville, Fl.

Re: Cost Increases

Scott,

We have entered this project in the amount of $98,622.00. the original proposal for this project provided on 06/28/2022 was for 74,399.00. Since that time we have seen increased material costs across from all our vendors. This includes steel pipe and all the components of the sprinkler system.

We thank you for the opportunity of working with you and we commit to you our full cooperation in making this project a success for all. If we can be of any further service, please do not hesitate to call.

Sincerely,

WIGINTON FIRE SYSTEMS

Kyle Hydeman

Kyle Hydeman

Dominic Ciacelli

Item 2

From: Scott Wright <swright@stellar.net>
Sent: Tuesday, February 28, 2023 2:47 PM
To: Daryl Weinstein
Cc: Dominic Ciacelli
Subject: FS64 Bldg Permit Fees over allowance Pay App #4 February
Attachments: FS 64 Material Escalation Contingency Log_2.28.2023.pdf

Importance: High

Good afternoon Daryl, per our discussion we will bill the permit fee overage of $1,028.49 on the Material Escalation Contingency line item on February's pay app #4. Back-up is attached. Thank you.

Jacksonville
Where Florida Begins.

City of Jacksonville
Department of Planning and Development
Building Inspection Division

Item 2

TRANSACTION RECEIPT

Order ID:	**10370770**		
Order total:	**$8,528.49**		
Date paid:	**2/22/2023 4:00:19PM**	Company:	**Stellar Group Inc**
ayment method:	**American Express**	Name:	**Timothy Jenkins**

Transaction #	Details	Amount
4817883	Permit Fees for B22-595567.000	$6,775.16
4817891	Permit Fees for B22-595568.000	$849.45
4817895	Permit Fees for B22-595569.000	$695.87
Convience Fee:		$208.01

Building Permit Fees FS64	**$8,528.49**
Permit Fee Allowance	**$7,500.00**
Amount Over Fee Allowance	**$1,028.49**

stellar

Scott Wright
Project Manager III
Stellar
o : 904-899-9808 | m : 904-832-3201
e : swright@stellar.net

This email and any attachments are confidential and intended solely for the use of the intended recipients; unauthorized use is strictly prohibited. If you have received this email in error please notify the sender immediately. Unless otherwise stated, opinions expressed in this e-mail are those of the author and are not endorsed by the author's employer. Finally, the recipient should check this email and any attachments for the presence of viruses. The company accepts no liability for damage caused by any virus transmitted by this email.

Item 2

1517 Faye Road --- Jacksonville, FL 32218
Phone (904) 724-6005 - Fax (904) 724-5007

Item 2

Date: May 24, 2023

TO: Scott Wright
Stellar

RE: COJ Fire Station No. 64 SQ # 5 – Heavy Duty Paving PG 76-22 Mix Design

We are pleased to provide the following quotation to furnish all labor, equipment, and materials to complete the following description of work. Heavy Duty Paving PG 76-22 Mix Design

HD Paving PG 76-22 Mix	QTY	U/M	Total
HD Paving PG 76-22 Mix	1234	SY	$ 8,934.16
Total			$ 8,934.16

General Conditions;
1. Terms of payment; a) DNS Contracting is to receive payment by the 15th of the month for all work accomplished during the preceding month (less 10% retainage), unless prior arrangements have been made and written approval provided by DNS Contracting. b) All past due payments will be subject to a 1.5% finance charge per month (18% per annum). DNS Contracting will also be entitled to reimbursement of any and all reasonable expenses incurred including, but not limited to attorney's fees in its effort to collect any past due monies. c) Final payment is to be made, including any retainage no later than the 15th day of the following month after scope of work covered under this proposal is completed.
2. The prices quoted above are offered for acceptance for a period of thirty calendar days, after which said prices may be subject to renegotiation.
3. Unless specifically noted above, the cost of any surety bonds is not included in this proposal.

DNS Contracting would like to thank you for the privilege of providing you with the above proposal of work and we will look forward to partnering with you on this project. If you have any questions or need anything further, please feel free to contact us.

Chris Davis
DNS Contracting, LLC
CBCO 57440 / CUC1224014

to indicate acceptance please sign and return one copy

Scott Wright

Item 2

From: Ben Patterson <ben@amcabinet.com>
Sent: Thursday, February 9, 2023 8:03 AM
To: Scott Wright; James Lebron; Keri Taylor
Cc: James Childs; Francis Obinna. Madubuike
Subject: RE: Fire Station 64 L2 Sinks
Attachments: av1812.pdf

Scott,

The add for us to pick up the 6 AV1812 solid surface sinks (similar in size/shape to K-2297) to and make the small top in Rm 104 is $2,140.00

See attached spec to see if that works

Thanks and we are standing by

Ben Patterson
Antique & Modern Cabinets, Inc.
2384 Vans Ave. Jacksonville, FL 32207
Ph: 904-393-9055
Fax: 904-393-7930

Visit our Website: www.antiqueandmoderncabinets.com

From: Scott Wright <swright@stellar.net>
Sent: Wednesday, February 8, 2023 5:29 PM
To: James Lebron <james@amcabinet.com>; Ben Patterson <ben@amcabinet.com>; Hunter Alexander <hunter@grodgerspc.com>; Andy Rodgers <arodgers@grodgerspc.com>
Cc: James Childs <jchilds@stellar.net>; Francis Obinna. Madubuike <fmadubuike@stellar.net>
Subject: FW: Fire Station 64 L2 Sinks
Importance: High

James/Ben – provide pricing to change all 6 of the L-2 sinks to SS vanities with SS integrated sinks in lieu of the undermount Kohler K-2297 sinks. The integrated sinks are to be the same dimension of the K-2297 sinks, see attached cutsheet. Submit revised shop drawings accordingly. Coordinate with Gary Rodgers Plumbing as needed.

Hunter/Andy – provide a credit for the six (6) L-2 Kohler sinks.

L-2	KOHLER	KATHRYN K-2297	RECTANGLE UNDEI SYMMONS MODEL K-8998 1-1/4" CAST

Thanks All!

Item 2

Scott Wright
Project Manager III
Stellar
o : 904-899-9808 | m : 904-832-3201
e : swright@stellar.net

From: Dominic Ciacelli <dciacelli@via-cs.com>
Sent: Wednesday, February 8, 2023 5:15 PM
To: Scott Wright <swright@stellar.net>; Scott Brady <sbrady@enbarchitects.com>; Williams, Maria <MariaCW@coj.net>; Weinstein, Daryl <DWeinstein@coj.net>; Lesniak, Michael <MLesniak@coj.net>; 'hoenshelr@pqh.com' <hoenshelr@pqh.com>; Brett Nansen <bnansen@auld-white.com>
Cc: Pete Sheridan <psheridan@via-cs.com>; Kenny Geisendorff <KGeisendorff@via-cs.com>; Darrell Heyman <dheyman@via-cs.com>
Subject: RE: Fire Station Projects: Updated Lessons Learned Log

Scott,
Yes the integrated solid surface sinks are to be the same size as the K-2297 sinks. Let me know if you have any other questions. Thanks

Dominic Ciacelli, P.E.
Project Administrator
VIA Consulting Services, Inc. (DBE)
10250 Normandy Blvd., Suite 304
Jacksonville, Florida 32221
(904)783-9842 (Office)
(904)619-9617 (Fax)
(407)687-7080 (Mobile)
http://www.via-cs.com
http://www.facebook.com/VIAcsinc

From: Scott Wright <swright@stellar.net>
Sent: Wednesday, February 8, 2023 4:56 PM
To: Scott Brady <sbrady@enbarchitects.com>; Dominic Ciacelli <dciacelli@via-cs.com>; Williams, Maria <MariaCW@coj.net>; Weinstein, Daryl <DWeinstein@coj.net>; Lesniak, Michael <MLesniak@coj.net>; 'hoenshelr@pqh.com' <hoenshelr@pqh.com>; Brett Nansen <bnansen@auld-white.com>
Cc: Pete Sheridan <psheridan@via-cs.com>; Kenny Geisendorff <KGeisendorff@via-cs.com>; Darrell Heyman <dheyman@via-cs.com>
Subject: RE: Fire Station Projects: Updated Lessons Learned Log

Dominic, #39, that's what I was asking in my previous email. Are the integrated solid surface sinks to be the same size as the specified Kohler K-2297 sinks?

KOHLER.

Item 2

Kathryn
Undermount bathroom s
K-22

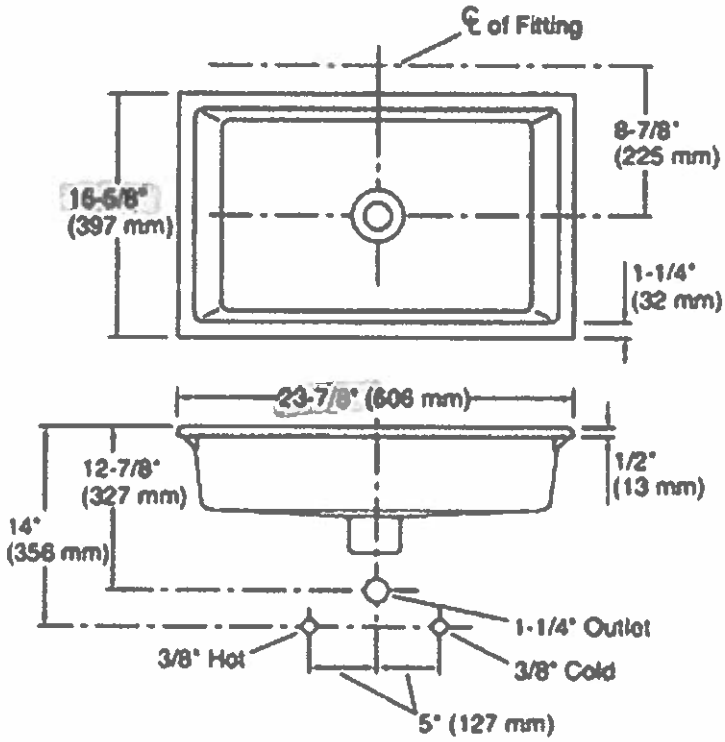

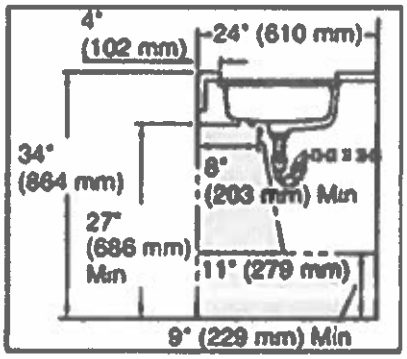

Recommended ADA Installation

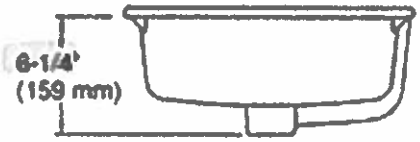

stellar
TAKING SOLUTIONS FURTHER

Scott Wright
Project Manager III
Stellar
o : 904-899-9808 | m : 904-832-3201
e : swright@stellar.net

From: Scott Brady <sbrady@enbarchitects.com>
Sent: Wednesday, February 8, 2023 4:21 PM
To: Dominic Ciacelli <dciacelli@via-cs.com>; Williams, Maria <MariaCW@coj.net>; Weinstein, Daryl <DWeinstein@coj.net>; Lesniak, Michael <MLesniak@coj.net>; Scott Wright <swright@stellar.net>; 'hoenshelr@pqh.com' <hoenshelr@pqh.com>; Brett Nansen <bnansen@auld-white.com>
Cc: Pete Sheridan <psheridan@via-cs.com>; Kenny Geisendorff <KGeisendorff@via-cs.com>; Darrell Heyman <dheyman@via-cs.com>
Subject: RE: Fire Station Projects: Updated Lessons Learned Log

Dominic,

Can you please provide some clarification on the following two items:

Item 2

#38: Is the design intent to provide a full depth panel that extends from the underside of the vanity countertop to finish floor or is it to be a supporting end panel that cantilevers off the wall and does not extend to the floor?

#39: By "integrated rectangular sink", please confirm that the design intent is for the sink to be solid surface. Also, Is there a basis-of-design rectangular sink that is desired? I ask because there are multiple sizes and styles of rectangular sinks available.

Thanks,

Scott A. Brady, AIA, NCARB, LEED AP
Ebert Norman Brady Architects
Quadrant One
4651 Salisbury Road, Suite 330
Jacksonville, FL 32256-6187
904-241-9997 Office
904-372-9302 Direct
904-710-1155 Cell
www.enbarchitects.com

From: Dominic Ciacelli <dciacelli@via-cs.com>
Sent: Wednesday, February 8, 2023 3:30 PM
To: Williams, Maria <MariaCW@coj.net>; Weinstein, Daryl <DWeinstein@coj.net>; Lesniak, Michael <MLesniak@coj.net>; Scott Wright <swright@stellar.net>; 'hoenshelr@pqh.com' <hoenshelr@pqh.com>; Brett Nansen <bnansen@auld-white.com>; Scott Brady <sbrady@enbarchitects.com>
Cc: Pete Sheridan <psheridan@via-cs.com>; Kenny Geisendorff <KGeisendorff@via-cs.com>; Darrell Heyman <dheyman@via-cs.com>
Subject: Fire Station Projects: Updated Lessons Learned Log

Good Afternoon All,

Please see the updated Fire Station Lessons Learned log attached, containing several new items which are highlighted yellow.
Let me know if there are any questions.

Thank you,

Dominic Ciacelli, P.E.
Project Administrator
VIA Consulting Services, Inc. (DBE)
10250 Normandy Blvd., Suite 304
Jacksonville, Florida 32221
(904)783-9842 (Office)
(904)619-9617 (Fax)
(407)687-7080 (Mobile)
http://www.via-cs.com
http://www.facebook.com/VIAcsinc

GARY RODGERS PLUMBING COMPANY, INC.
6915 BUSINESS PARK BOULEVARD, NORTH - JACKSONVILLE, FLORIDA 32256
PH(904) 765-7964 / FAX(904) 765-9805

Item 2

February 13, 2023

Stellar Group, Inc.

Attn: Scott Wright

Re: Fire Station 64
Deductive Change Order L-2 Lavatory

Deduct for L-2 Undermount Lavatories. Lavatories to be provided by cabinet contractor.

Material:

L-2 Undermount Lavatory	6	@	$170.00	$1,020.00

Total Credit: **$1,020.00**

Item 2

Project Change Request

Antique & Modern Cabinets, Inc.
"Custom Cabinetry Since 1951"
2384 Vans Avenue, Jacksonville FL 32207

Date: 3/3/2023

Project Name/Location:

Fire Station 64

TO:

Stellar

Attn: Scott Wright

Job Description:

Add valance to top of upper cabinets in Kitchen

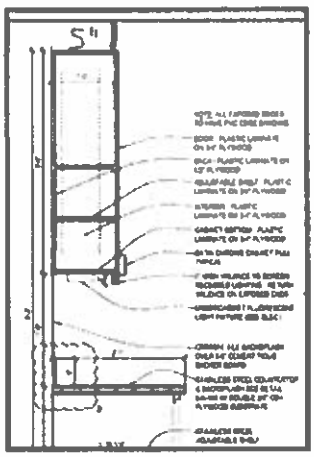

Estimated Job Cost: $380

Estimated By: James Lebron & Ben Patterson

This estimate is for completing the job as described above. It is based on our evaluation and does not include material price in-creases or additional labor and materials which may be required should unforeseen problems or adverse weather conditions arise after the work has started.

1517 Faye Road --- Jacksonville, FL 32218
Phone (904) 724-6005 - Fax (904) 724-5007

Item 2

Date: March 22, 2023

TO: Scott Wright
Stellar

RE: COJ Fire Station No. 64 SQ # 3 – Changes to Water Service Use

We are pleased to provide the following quotation to furnish all labor, equipment, and materials to complete the following description of work. Changes to water service

$20.87/LF

26.61/LF

Changes to Water Services	QTY	U/M	Total
1 1/2" Schedule 80 WM	40	LF	$834.80
2 1/2" Schedule 80 Irrigation	160	LF	$4,257.60
4" x 2" Saddle	-1	EA	($594.45)
8" Tees	-1	EA	($1,100.11)
Total			**$3,397.84**

General Conditions;
1. Terms of payment; a) DNS Contracting is to receive payment by the 15th of the month for all work accomplished during the preceding month (less 10% retainage), unless prior arrangements have been made and written approval provided by DNS Contracting. b) All past due payments will be subject to a 1.5% finance charge per month (18% per annum). DNS Contracting will also be entitled to reimbursement of any and all reasonable expenses incurred including, but not limited to attorney's fees in its effort to collect any past due monies. c) Final payment is to be made, including any retainage no later than the 15th day of the following month after scope of work covered under this proposal is completed.
2. The prices quoted above are offered for acceptance for a period of thirty calendar days, after which said prices may be subject to renegotiation.
3. Unless specifically noted above, the cost of any surety bonds is not included in this proposal.

DNS Contracting would like to thank you for the privilege of providing you with the above proposal of work and we will look forward to partnering with you on this project. If you have any questions or need anything further, please feel free to contact us.

Chris Davis
DNS Contracting, LLC
CBCO 57440 / CUC1224014

to indicate acceptance please sign and return one copy

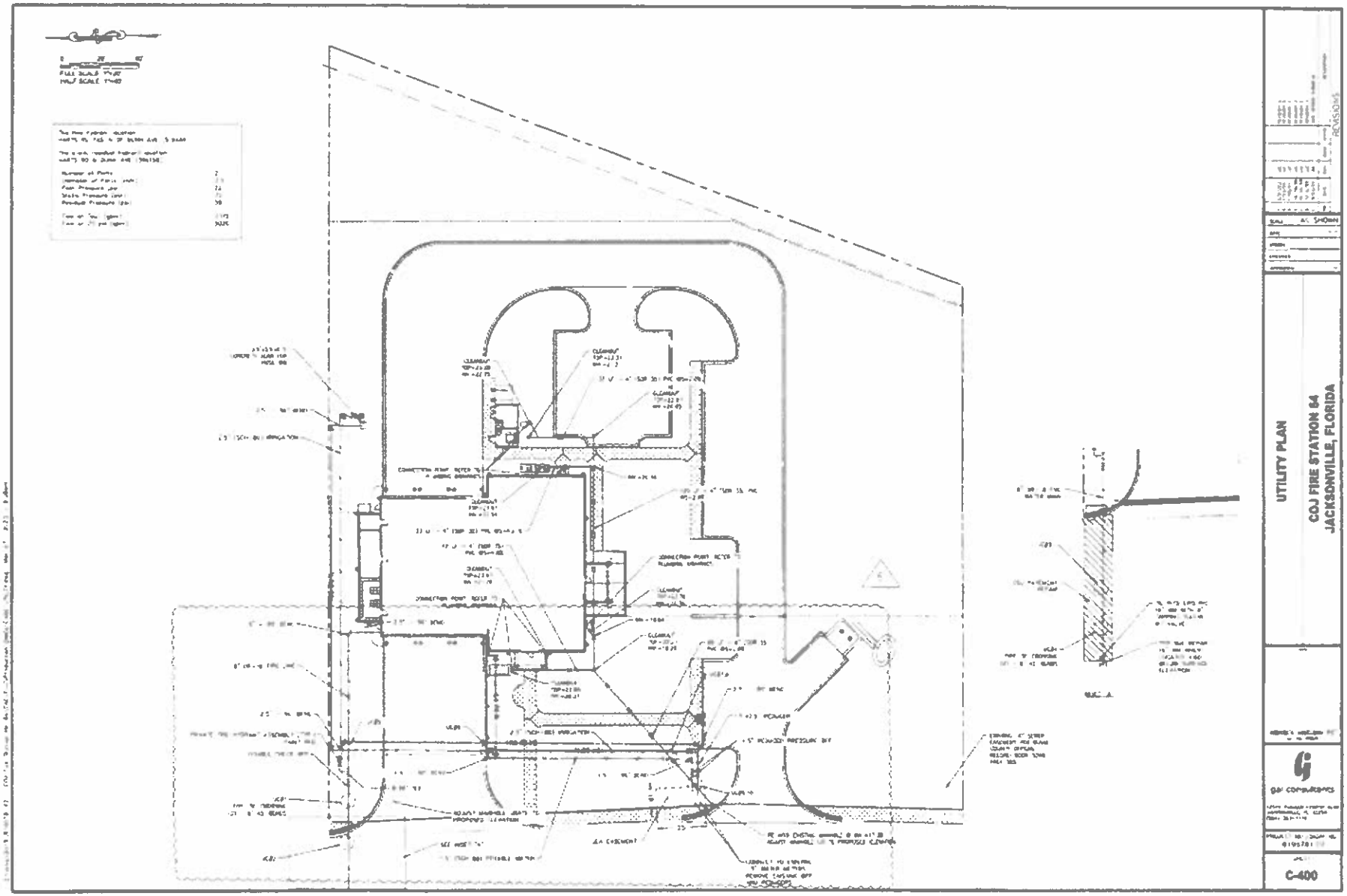
UTILITY PLAN
COJ FIRE STATION 64
JACKSONVILLE, FLORIDA
C-400

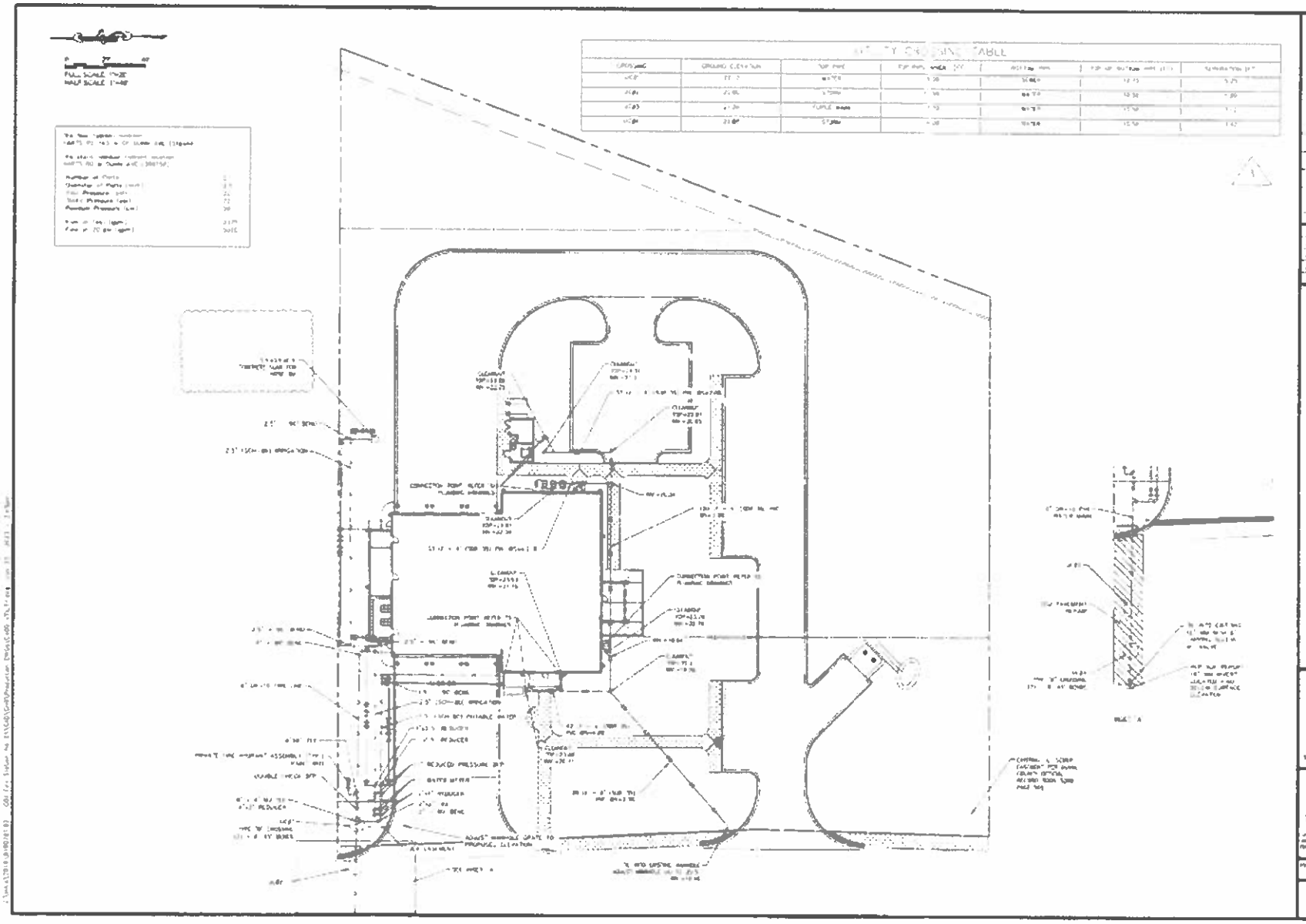
FULL SCALE 1"=20'
HALF SCALE 1"=40'
UTILITY PLAN
COJ FIRE STATION 64
JACKSONVILLE, FLORIDA
C-400

Weather Engineers, Inc.

Air Conditioning • Heating • Refrigeration • Clean Air Professionals

Item 2

TO:	Stellar - Scott Wright	DATE:	4/3/2023
FROM:	David Macher		
PROJECT:	COJ Fire Station No. 64		
REFERENCE:	Bunk Room Filter Housing		
CHANGE ORDER NUMBER:	PCO-001		

WE PROPOSE TO PROVIDE THE FOLLOWING MATERIALS AND LABOR

MATERIALS/SUBCONTRACTOR:	QTY	COST	TOTAL COST
4" filter housing & MERV-16 filter	1	$ 587.12	$ 587.12
		7-1/2% TAX	$ 44.03
	TOTAL MATERIALS		$ 631.15

LABOR:	HOURLY CREW RATE	TOTAL HR.	COST PER UNIT
Duct Transistion & filter housing mounting	87	6	$ 522.00
	LABOR TOTAL		$ 522.00
	LABOR BURDEN 42%		$ 219.24
	BOND		NIC

NOTES:		
	TOTAL MATERIALS	$ 631.15
	TOTAL LABOR	$ 741.24
	SUBTOTAL	$ 1,372.39
	OVERHEAD (5%)	$ 68.62
	SUBTOTAL	$ 1,441.01
	PROFIT (5%)	$ 72.05
	TOTAL PRICE FOR THIS CHANGE	$ 1,513.06

TIME INCREASE **YES** ☐ **NO** ☑

MATERIALS LEAD TIME:

LABOR :

NAME:		TITLE:	

CONTRACTOR BY SIGNING THIS PROPOSAL YOU ARE AUTHORIZING WEATHER ENGINEERS TO PROCEED WITH THIS WORK AND AGREEING TO PRICE AND TERMS STATED ABOVE.

WEATHER ENGINEERS AUTHORIZED SINGNITURE.

NAME:	David Macher	TITLE:	Project Manager

TRANE Supply

QUOTATION

Trane U.S. Inc.
JACKSONVILLE PARTS SUPPLY
8929 Western Way, Suite 1
JACKSONVILLE, FL 32256
USA
PH: 904-596-0707
Jacksonville@tranesupply.com

Item 2

Order Number	
19906060	
Order Date	Page
3/31/2023 06:38:54	1 of 2

Quote Expires On 4/30/2023

Prepared For:

WEATHER ENGR INCORPORATED
PO BOX 37068
ATTN ACCOUNTS PAYABLE
JACKSONVILLE, FL 32236
USA
9043563963

Ship To:

WEATHER ENGR INCORPORATED
1000 Edison Ave
Jacksonville, FL 32204-2819
USA

Requested By: Dave Macher,

P21 ID: 1031251
Payment Terms: N30
National Account ID:

Internal Account: 1689009
Customer No: 33325

PO Number	*Ship Route*	*Quoted By:*
		Charles Hughley

Unit Info: Make / Model / Serial

Quantities					*Item ID* / *Item Description*	*Pricing UOM* / *Unit Size*	*Unit Price* / *Store Pickup*	*Extended Price* / *HazMat*
Ordered	*Allocated*	*Remaining*	*UOM* / *Unit Size*	*Disp.* / *Weight*				
4	0	4	EA		EQBFM235A0AH11	EA	146.78	587.12
			1.0	22.00	5 in Cabinet w/Quikbox Filter 5 in Cabinet w/Quikbox Filter	1.0	N	N

Customer Note: FREE FREIGHT ON STOCK ORDERS AND FILTER ORDERS

Customer Note: *****NO FREIGHT CHARGE FOR SHIPOUT, LOCAL DELIVERY TRUCKS IN USE*****

TRANE Supply

QUOTATION

Trane U.S. Inc.
JACKSONVILLE PARTS SUPPLY
8929 Western Way, Suite 1
JACKSONVILLE, FL 32256
USA
PH: 904-596-0707
Jacksonville@tranesupply.com

Item 2

Order Number	
19906060	
Order Date	Page
3/31/2023 06:38:54	2 of 2

Quote Expires On 4/30/2023

Total Lines: 1	***SUB-TOTAL***	587.12
	FLORIDA TAX	35.22
	DUVAL TAX	8.81
	QUOTE TOTAL	**631.15**
	U.S. Dollars	

This is a quote, not an invoice. Prices quoted are valid for 30 days from the date issued unless otherwise indicated, with the exceptions of commodity and equipment pricing which are subject to change by Trane Supply without notice. Pricing for undelivered commodity and equipment orders older than 30 days are subject to change by Trane Supply to reflect current pricing at time of delivery. Tax is an estimate and is subject to changes in shipping address and applicable tax rates. Shipping and Handling charges will be applied if necessary at the time of the order. Quoted items are subject to availability and are not guaranteed to be in stock. Returned parts may be subject to restocking fees and special order parts may not be returnable.

All purchases are subject to Trane Parts and Supplies terms of sale, www.trane.com/PartsTermsOfSale

DUVAL FENCE, INC.

Item 2

DUVAL FENCE, INC.
Jacksonville, FL 32257
www.duvalfence.com

5151 Sunbeam Road, Suite 13
904-260-4747

PROPOSAL/CONTRACT

04/12/2023

Customer Information:

Stellar
Scott Wright 832-3201
2900 Hartley Road
Jacksonville, FL 32257

Job Information:

Estimator: Pete
COJ FS 64
ADD-ON FOR 6'W X 8'H GATE

Notes:
Install 6'wide X 8'high gate with post and tie on to fence
Double Swing Gate.....$2,794.00
Single Swing Gate.....$2,527.00

TOTAL INCLUDES INSTALLATION AND MATERIAL. THIS IS ONLY A QUOTE FOR TODAY ONLY. OUR VENDORS ARE PRICING THE PRODUCT AT THE DAY OF SHIPMENT. THEREFORE, THE FINAL PRICE WILL BE ADJUSTED TO COST AT THE TIME WE RECEIVE THE PRODUCT.

DUVAL FENCE, INC. agrees to guarantee above fence to be free from defects in materials and workmanship for one year.

DUVAL FENCE, INC. shall advise the customer as to local zoning regulations but responsibility for complying with said regulations and obtaining any required permits shall rest with the customer. DUVAL FENCE, INC. will assist the customer, upon request, in determining where the fence is to be erected, but under no circumstance does DUVAL FENCE, INC. assume any responsibility concerning property lines or in any way guarantee their accuracy. If property pins cannot be located it is recommended that the customer have the property surveyed.

DUVAL FENCE, INC. will assume the responsibility for having underground public utilities located and marked. However, DUVAL FENCE, INC. assumes no responsibility for unmarked sprinkler lines, or any other unmarked buried lines or objects. The customer will assume all liability for any damage caused by directing DUVAL FENCE, INC. to dig in the immediate vicinity of known utilities.

The final billing will be based on the actual footage of fencing built and the work performed. Partial billing for materials delivered to the job site and work completed may be sent at weekly intervals. Adjustments for material used on this job and adjustments for labor will be charged or credited at the currently established rates. Additional charges for any extra work not covered in this contract that was requested by the customer will also be added. The full amount of this contract along with any additional charges will become payable upon completion of all work whether or not it has been invoiced.

A finance charge of 1 1/2% per month (or a minimum of $1.00), which is an annual percentage rate of 18%, shall be applied to accounts that are not paid within 10 days after completion of any work invoiced. All materials will remain the property of DUVAL FENCE, INC. until all invoices pertaining to this job are paid in full. The customer agrees to pay all interest and any costs incurred in the collection of this debt.

Contract Amount: $

Down Payment: $

Balance Due: $

Approved & Accepted for Customer:

Accepted for DUVAL FENCE, INC.:

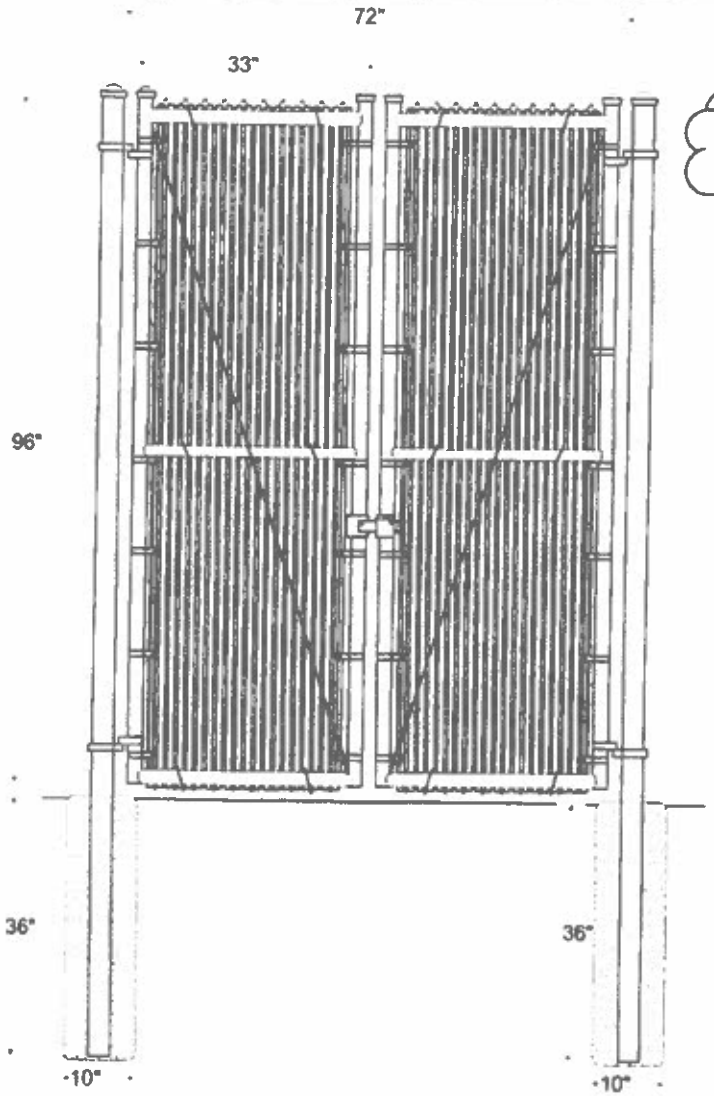

Item 2

FABRIC 96" 9 GA FIN EX BLACK (2" Mesh) KT VINYL CHAIN-LINK FABRIC

BRACING Terminal posts braced and trussed to the nearest line post with 1 5/8" O.D. BLACK PC LG-40 PIPE and BLACK 3/8" HM VINYL PS THREADED TRUSS ROD & BLACK HM VINYL PS TRUSS ROD TIGHTENER

GATES Framework of 2" BLACK PC LG-40 PIPE, 2.28 lbs. per foot Gates braced and trussed as necessary Same fabric as fence

GATE POST 3" O.D BLACK PC LG-40 PIPE CUT POST, 4.64 lbs per foot. Concrete footing: 10" diameter, 36" depth.

FITTINGS BLACK POWDER COATED PS PLAIN BRACE BAND & BLACK CARRIAGE BOLT W/NUT. BLACK POWDER COATED PS OFFSET RAIL END. BLACK HM VINYL PS LOOP CAP BLACK POWDER COATED PS DOME CAP BLACK HM VINYL 3/4" PS TENSION BAR. BLACK POWDER COATED PS PLAIN TENSION BAND & BLACK CARRIAGE BOLT W/NUT

TIE WIRE. 6 1/2" BLACK STEEL CUT/HOOK 9 GA. TIE WIRE spaced 15" on center for line posts & 18" on center for rails

POST FOOTING CUBIC YARD TRUCK POURED CONCRETE.

FENCE INSERTS: 96" BLACK HDPE (1 1/8") TOP LOCK FENCE SLAT

DUVAL FENCE, INC.

DUVAL FENCE, INC.
5151 Sunbeam Road, Suite 13
Jacksonville, FL 32257
904-260-4747

Stellar
Scott Wright 832-3201
2900 Hartley Road
Jacksonville, FL 32257

6' DOUBLE GATE, 2" BLACK PC LG-40 PIPE FRAME

Drawn: 04/12/2023
File: STELLAR FS64 ADD DBL GATE

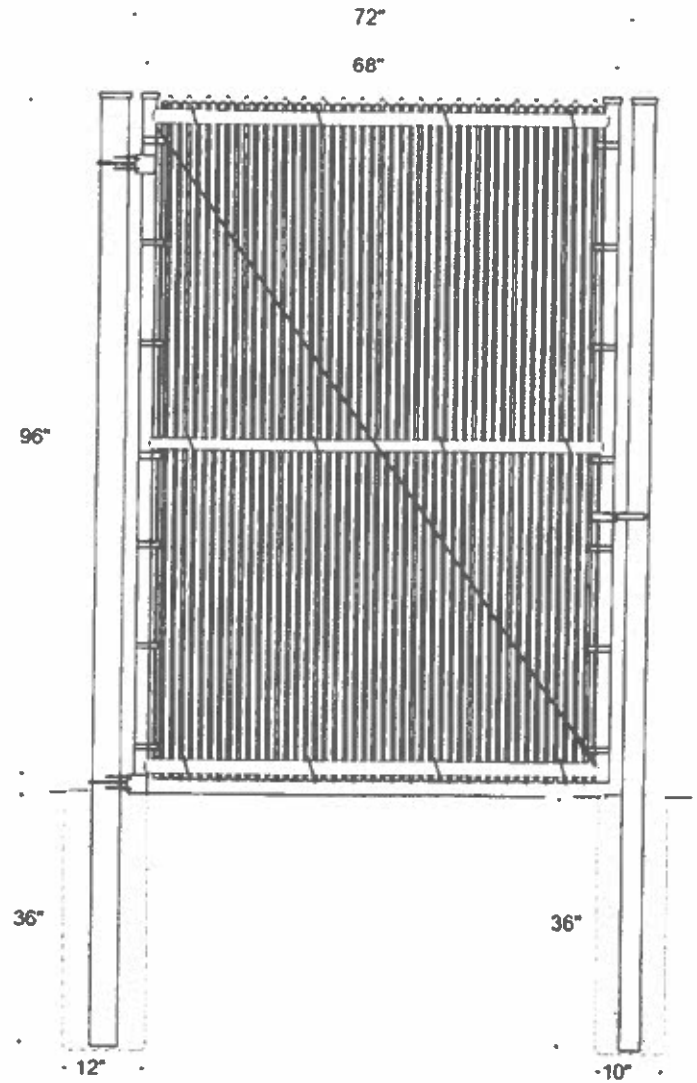

Item 2

FABRIC 96" 9 GA FIN EX BLACK (2" Mesh) KT VINYL CHAIN-LINK FABRIC

BRACING. Terminal posts braced and trussed to the nearest line post with 1 5/8" O D BLACK PC LG-40 PIPE and BLACK 3/8" HM VINYL PS THREADED TRUSS ROD & BLACK HM VINYL PS TRUSS ROD TIGHTENER

GATES Framework of 2" BLACK PC LG-40 PIPE, 2 28 lbs per foot. Gates braced and trussed as necessary Same fabric as fence

GATE POST 4" O.D. BLACK PC LG-40 PIPE CUT POST, 6.56 lbs per foot. Concrete footing 12" diameter, 36" depth.

FITTINGS BLACK POWDER COATED PS PLAIN BRACE BAND & BLACK CARRIAGE BOLT W/NUT. BLACK POWDER COATED PS OFFSET RAIL END BLACK HM VINYL PS LOOP CAP BLACK POWDER COATED PS DOME CAP BLACK HM VINYL 3/4" PS TENSION BAR. BLACK POWDER COATED PS PLAIN TENSION BAND & BLACK CARRIAGE BOLT W/NUT

TIE WIRE 6 1/2" BLACK STEEL CUT/HOOK 9 GA. TIE WIRE spaced 15" on center for line posts & 18" on center for rails

POST FOOTING. CUBIC YARD TRUCK POURED CONCRETE

FENCE INSERTS 96" BLACK HDPE (1 1/8") TOP LOCK FENCE SLAT

DUVAL FENCE, INC.

DUVAL FENCE, INC.
5151 Sunbeam Road, Suite 13
Jacksonville, FL 32257
904-260-4747

Stellar
Scott Wright 832-3201
2900 Hartley Road
Jacksonville, FL 32257

6' SINGLE GATE, 2" BLACK PC LG-40 PIPE FRAME

Drawn: 04/12/2023
File:

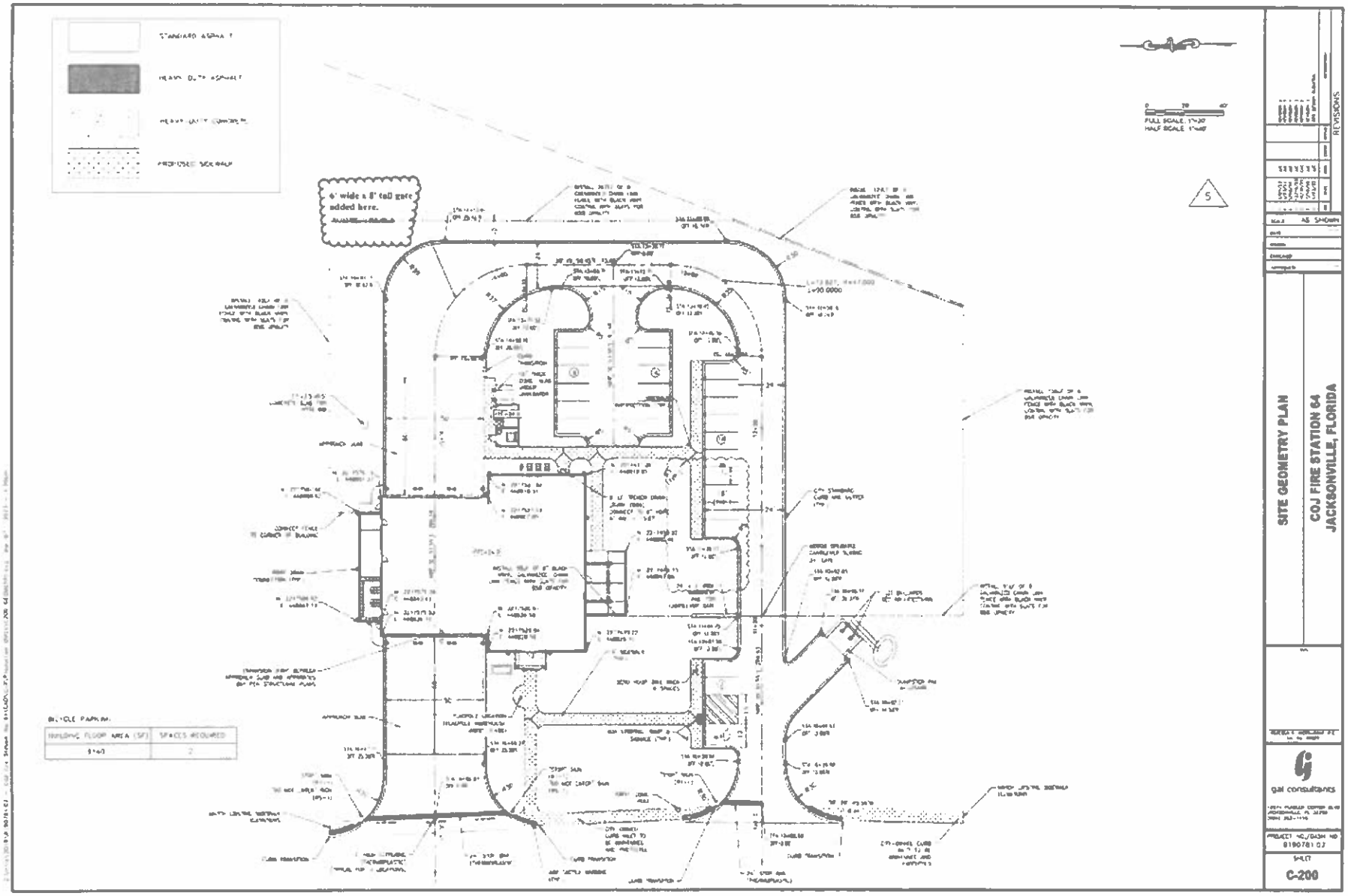
6' wide x 8' tall gate added here.
FULL SCALE 1"=20'
HALF SCALE 1"=40'
5
BICYCLE PARKING
BUILDING FLOOR AREA (SF)
SPACES REQUIRED
SITE GEOMETRY PLAN
COJ FIRE STATION 64
JACKSONVILLE, FLORIDA
REVISIONS
AS SHOWN
gai consultants
PROJECT NO./DASH NO
0190781.02
SHEET
C-200

GARY RODGERS PLUMBING COMPANY, INC
6915 BUSINESS PARK BOULEVARD, NORTH - JACKSONVILLE, FLORIDA 32256
PH(904) 765-7964 / FAX(904) 765-9805

Item 2

June 12, 2023

Attn: Scott Wright

Stellar Group, Inc.

Re: Fire Station 64
Change Order EWH-1

Furnish labor and materials to install 80-gallon water heater per request in lieu of 50-gallon water heater specified (EWH-1)

Materials:				
80 Gallon EWH-1	1	@	$6,554.00	$6,554.00
Credit for 50-gal EWH-1				$3,785.00
Subtotal:				$2,769.00
Tax 7.5%:				$208.00
Profit 10%:				$298.00

Total Change Order $3,275.00

COMMERCIAL PLUMBING CONTRACTOR SINCE 1979 IN
NORTHEAST FLORIDA AND SOUTHEAST GEORGIA

Dominic Ciacelli

Item 2

From: Scott Wright <swright@stellar.net>
Sent: Tuesday, June 20, 2023 10:35 AM
To: Dominic Ciacelli; Daryl Weinstein - City of Jacksonville - Department of Public Works (dweinstein@coj.net)
Subject: FW: Fire Station 64 - PVC Edge Banding @ Laminate Countertops

Dominic, please see below back up per your request. I have issued them a CO to proceed accordingly. Thank you.

Scott Wright
Project Manager III
Stellar
o : 904-899-9808 | m : 904-832-3201
e : swright@stellar.net

From: James Lebron <james@amcabinet.com>
Sent: Tuesday, June 20, 2023 10:14 AM
To: Scott Wright <swright@stellar.net>
Subject: RE: Fire Station 64 - PVC Edge Banding @ Laminate Countertops

Material: $395
Labor: $593
Sales Tax: $81
Profit: $98

James Lebron
Antique & Modern Cabinets, Inc.
2384 Vans Ave. Jacksonville, FL 32207
Office: 904-393-9055 ext. 104
Cell: 904-674-5569
Fax: 904-393-7930
Visit our Website: www.antiqueandmoderncabinets.com

From: Scott Wright <swright@stellar.net>
Sent: Tuesday, June 20, 2023 8:38 AM
To: James Lebron <james@amcabinet.com>
Subject: FW: Fire Station 64 - PVC Edge Banding @ Laminate Countertops

James, please provide a breakdown of costs of $1,167 for the added pvc edge banding at laminate countertops. Thank you.

Scott Wright
Project Manager III
Stellar
o : 904-899-9808 | m : 904-832-3201
e : swright@stellar.net

Item 2

From: Dominic Ciacelli <dciacelli@via-cs.com>
Sent: Thursday, June 15, 2023 7:13 AM
To: Scott Wright <swright@stellar.net>; Daryl Weinstein - City of Jacksonville - Department of Public Works (dweinstein@coj.net) <dweinstein@coj.net>
Cc: Francis Obinna. Madubuike <fmadubuike@stellar.net>
Subject: RE: Fire Station 64 - PVC Edge Banding @ Laminate Countertops

Scott,

JFRD has approved the $1,167 in additional costs for the PVC edge banding. Please let Antique and Modern know to proceed with production.

Also, can you please provide the backup for the additional cost for our records. Thanks

Dominic Ciacelli, P.E.
Project Engineer
VIA Consulting Services, Inc. (DBE)
10250 Normandy Blvd., Suite 304
Jacksonville, Florida 32221
(904)783-9842 (Office)
(904)619-9617 (Fax)
(407)687-7080 (Mobile)
http://www.via-cs.com
http://www.facebook.com/VIAcsinc

From: Scott Wright <swright@stellar.net>
Sent: Wednesday, June 14, 2023 2:14 PM
To: Daryl Weinstein - City of Jacksonville - Department of Public Works (dweinstein@coj.net) <dweinstein@coj.net>; Dominic Ciacelli <dciacelli@via-cs.com>
Subject: FW: Fire Station 64 - PVC Edge Banding @ Laminate Countertops
Importance: High

Daryl/Dominic, please see below email for costs to add PVC edge banding to all laminate countertops at FS64 for $1,167. I'll add it to the CO #1 log. Let me know asap if this is approved as Antique & Modern has released this job for production today.

Thank you.

Item 2

Scott Wright
Project Manager III
Stellar
o : 904-899-9808 | m : 904-832-3201
e : swright@stellar.net

From: James Lebron <james@amcabinet.com>
Sent: Wednesday, June 14, 2023 5:22 AM
To: Scott Wright <swright@stellar.net>; Ben Patterson <ben@amcabinet.com>
Cc: Francis Obinna. Madubuike <fmadubuike@stellar.net>; James Childs <jchilds@stellar.net>; Keri Taylor <keri@amcabinet.com>
Subject: RE: Fire Station 64 - PVC Edge Banding @ Laminate Countertops

Scott,

We can provide the 3mm PVC edging at the laminate tops for $1,167.00.

Just let me know ASAP if this is approved, as I'm putting this job into production today for install in a few weeks. I'll need a little time to get the material in hand if they want it.

James Lebron
Antique & Modern Cabinets, Inc.
2384 Vans Ave. Jacksonville, FL 32207
Office: 904-393-9055 ext. 104
Cell: 904-674-5569
Fax: 904-393-7930
Visit our Website: www.antiqueandmoderncabinets.com

From: Scott Wright <swright@stellar.net>
Sent: Tuesday, June 13, 2023 1:59 PM
To: James Lebron <james@amcabinet.com>; Ben Patterson <ben@amcabinet.com>
Cc: Francis Obinna. Madubuike <fmadubuike@stellar.net>; James Childs <jchilds@stellar.net>
Subject: Fire Station 64 - PVC Edge Banding @ Laminate Countertops

James/Ben, can you please provide a price to include pvc edge banding at all laminate countertops at Fire Station 64? Thank you.

Scott Wright
Project Manager III
Stellar
o : 904-899-9808 | m : 904-832-3201
e : swright@stellar.net

Item 2

This email and any attachments are confidential and intended solely for the use of the intended recipients; unauthorized use is strictly prohibited. If you have received this email in error please notify the sender immediately. Unless otherwise stated, opinions expressed in this e-mail are those of the author and are not endorsed by the author's employer. Finally, the recipient should check this email and any attachments for the presence of viruses. The company accepts no liability for damage caused by any virus transmitted by this email.

LASA CONSTRUCTION, INC

6734 Greenland Industrial Blvd
Jacksonville, Fl 32258
(904) 260-2381 fax (904) 260-0951

Item 2

Change Order Request

Change Order Request # 2
Job # : TBD
Date : 7/10/23

Sold To : Stellar
Project : Fire Station #64

Description: Perform level 5 finish at all drywall below ceiling

******Work figured to be performed during regular working hours unless shown otherwise below. Any after hours, overtime, and weekend work will require additional cost******

Reg. Hours	O.T. Hours	EMPLOYEE	Reg. Rate	O.T. Rate	Labor Extension
	-	Framer	$ 32.00	$ 48.00	
	-	Drywall installer	$ 32.00	$ 48.00	
40.0	-	Finisher	$ 32.00	$ 48.00	$ 1,280.00
	-	ACT Installer	$ 32.00	$ 48.00	
	-	Material pickup and dropoff	$ 32.00	$ 48.00	
	-	Foreman	$ 40.00	$ 60.00	

QTY	Unit	Description	Unit	Material Ext.
22	ea	joint compound	$20.000	$440.00
				$0.00
				$0.00
				$0.00
				$0.00

Equipment						Description	Ext.
Hr.		Da.		Wk.			
Offsite Mileage						Miles @	$0.00

Summary			
Labor		$	1,280.00
Burden	25%	$	320.00
Materials			$440.00
Tax		$	-
Equipment		$	-
	Subtotal	$	2,040.00
OH & Profit	15%	$	306.00
Total		$	2,346

Authorized By: _____ _____

Contractor and/or Owner Name & Title

stellar
TAKING SOLUTIONS FURTHER

Fire Station 64
Additional General Conditions
October 2 thru October 20

Item 2

Position	Name	3 wks x 40hrs/wk 120 Additional Hours	Contract Hourly Rate	175% Overhead per Contract	SubTotals
Sr. Project Manager	Scott Wright	120	54.29	95.01	$ 11,400.90
Assistant Project Manager	Francis Madubuike	120	29.15	51.01	$ 6,121.50
Superintendent	James Childs	120	66.86	117.01	$ 14,040.60
				SubTotal	**$ 31,563.00**
				Profit 10%	**$ 3,156.30**
				TOTAL	**$ 34,719.30**

$26,913.00 Stellar Contingency
$7,806.30 Material Escalation Contingency

EXHIBIT A

Form 7 — Price Sheet

Item 2

Proposal Number: CDB-0127-19

SCHEDULE OF PROPOSED PRICES/RATES

Contract Fee Summary for Engineering Division
Design-Build Services for Fire Station 64
City of Jacksonville, FL

1. Flat Fee (payable upon completion of project or upon completion of listed deliverables):

To be provided on Project by Project basis at contract time. Negotiated

2. If charges are based on hours worked, the hourly direct labor rates (without Fringe Benefits) are:

A. NAME OF CONSULTANT: **Stellar Group, Incorporated**

Principal (Partner or Senior Officer):	$	73.15	Per Hr.
Sr. Project Manager:	$	54.29	Per Hr.
Project Manager:	$	37.72	Per Hr.
Assistant Project Manager:	$	29.15	Per Hr.
Preconstruction Manager:	$	54.86	Per Hr.
Superintendent:	$	66.86	Per Hr.
Field Engineer:	$	39.43	Per Hr.
Safety Manager:	$	62.86	Per Hr.
Quality Control Manager:	$	57.15	Per Hr.
Clerical:	$	24.00	Per Hr.

B. NAME OF CONSULTANT: **POH Design Group, Inc.**

Principal (Partner or Senior Officer):	$	77.33	Per Hr.
Project Manager (Responsible Professional):	$	50.34	Per Hr.
Registered Professional Engineer:	$	39.74	Per Hr.
Engineering Technician:	$	29.85	Per Hr.
Clerical:	$	24.04	Per Hr.

Estimated percentage of total fee to be performed by sub—contractors: 35%

Item 2

EXHIBIT A

C. NAME OF CONSULTANT: GAI Consultants, Inc.

Sr. Director:	$	100.00	Per Hr.
Director:	$	75.00	Per Hr.
Sr. Engineering Manager:	$	65.50	Per Hr.
Sr. Engineer:	$	55.00	Per Hr.
Project Engineer:	$	42.25	Per Hr.
Engineer Intern:	$	33.00	Per Hr.
Sr. LA Manager:	$	60.00	Per Hr.
Project LA:	$	46.23	Per Hr.
LA Technician:	$	31.12	Per Hr.
Lead Designer:	$	41.20	Per Hr.
Planning Manager:	$	56.77	Per Hr.
Sr. Planner:	$	36.00	Per Hr.
CAD Operator (Survey and Civil):	$	30.00	Per Hr.
Surveyor (PSM):	$	61.21	Per Hr.
Two-Man Survey Crew:	$	50.00	Per Hr.
Admin:	$	23.00	Per Hr.

D. NAME OF CONSULTANT: Meskel & Associates Engineering

Senior Engineer:	$	44.43	Per Hr.
Project Engineer:	$	40.87	Per Hr.
Staff Engineer:	$	28.50	Per Hr.
CAD Operator:	$	20.00	Per Hr.
Field Technician:	$	22.00	Per Hr.
Clerical:	$	17.00	Per Hr.

E. NAME OF CONSULTANT: McVeigh & Mangum Engineering

Principal:	$	84.13	Per Hr.
Project Manager:	$	65.38	Per Hr.
Registered Professional:	$	38.22	Per Hr.
Engineering Technician:	$	32.09	Per Hr.
Administrative/Clerical:	$	25.00	Per Hr.

EXHIBIT A

Item 2

3. Other Direct Project Costs per Unit (please specify)

_____

_____

4. OVERHEAD: (Combined Fringe Benefits & Administrative): Overhead Rate 175% (this applies to Stellar Group and GAI Consultants, see attached)

   OVERHEAD: (Combined Fringe Benefits & Administrative): Overhead Rate 150% (this applies to PQH)

   OVERHEAD: (Combined Fringe Benefits & Administrative): Overhead Rate 200% (this applies to Meskel&Assoc.)

   OVERHEAD: (Combined Fringe Benefits & Administrative): Overhead Rate 142% (this applies to McVeigh & Mangum)

5. PROFIT: Labor Related Costs (Labor + Overhead): x 10%

6. Please provide any other relevant rates that may apply to this project including average direct hourly labor rates for other categories of proposed personnel

_____

Dominic Ciacelli

Item 2

From: Scott Wright <swright@stellar.net>
Sent: Wednesday, October 25, 2023 7:02 AM
To: Lesniak, Michael
Cc: James Childs, Daryl Weinstein; Dominic Ciacelli
Subject: Re: FS64 replace mulch w/white #57 stone

Will do. Thank you.

Sent from my iPhone

Scott Wright
Project Manager III
Stellar
o : 904-899-9808 | m : 904-832-3201
e : swright@stellar.net

On Oct 25, 2023, at 6:32 AM, Lesniak, Michael <MLesniak@coj.net> wrote:

Proceed please
Mike Lesniak

From: Scott Wright <swright@stellar.net>
Sent: Tuesday, October 24, 2023 3:55 PM
To: Lesniak, Michael <MLesniak@coj.net>
Cc: James Childs <jchilds@stellar.net>; Weinstein, Daryl <DWeinstein@coj.net>; Dominic Ciacelli <dciacelli@via-cs.com>
Subject: FW: FS64 replace mulch w/white #57 stone
Importance: High

EXTERNAL EMAIL: This email originated from a non-COJ email address. Do not click any links or open any attachment unless you trust the sender and know the content is safe.

Good afternoon Chief Lesniak. Jimmy mentioned you asked to have the mulch beds a the back of the building replaced with white stone. The landscaper priced this at $2,500 per the 3 locations highlighted in the below photo. Please let us know if you want to proceed with this and we'll direct them accordingly. Thank you!

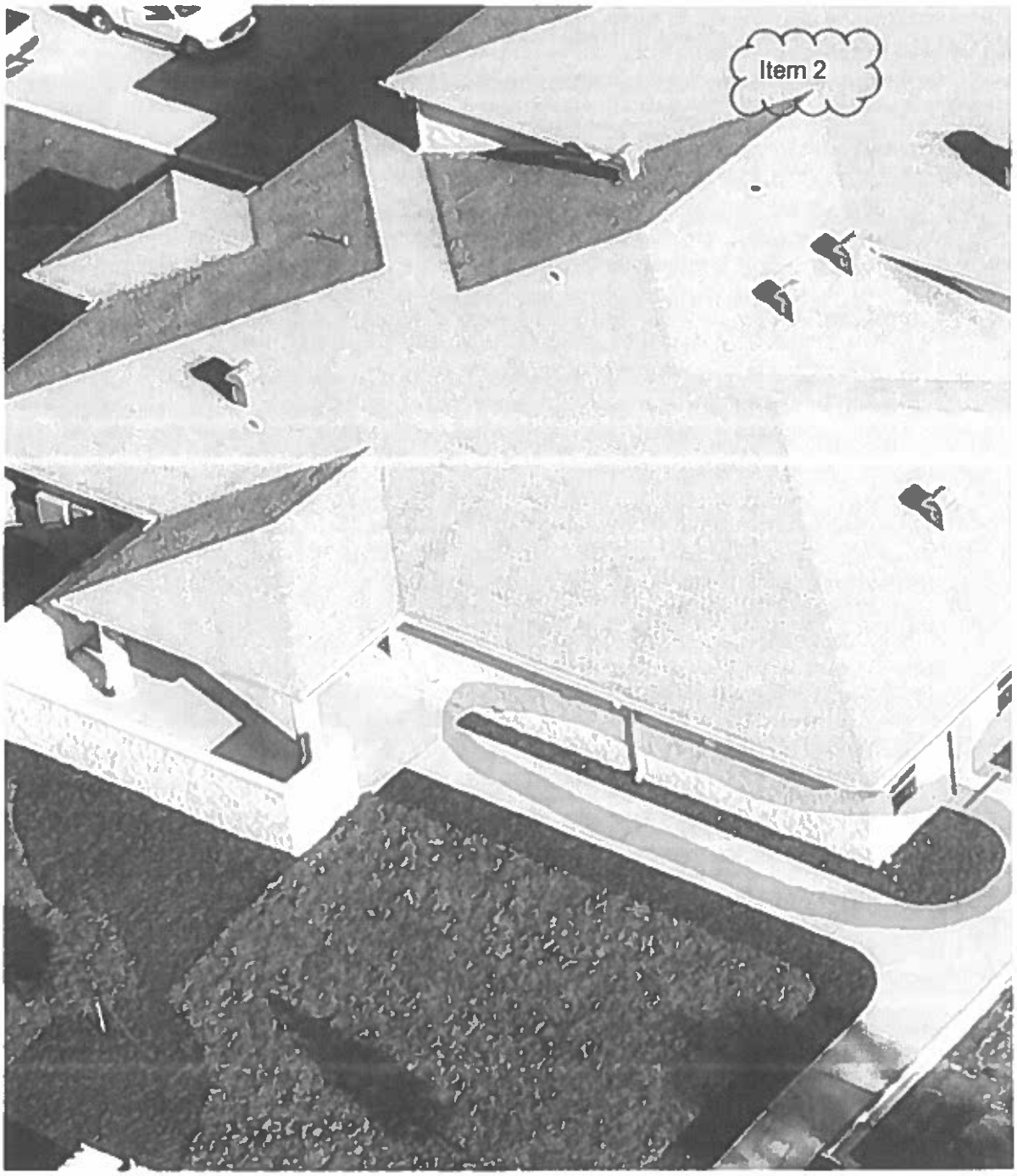

Scott Wright
Project Manager III
Stellar
o : 904-899-9808 | m : 904-832-3201
e : swright@stellar.net

Item 2

From: Costa Verde Lands <info@cvscape.com>
Sent: Tuesday, October 24, 2023 3:44 PM
To: Scott Wright <swright@stellar.net>; maureen cvscape.com <maureen@cvscape.com>
Cc: ben@cvscape.com; James Childs <jchilds@stellar.net>
Subject: Re: FS64 replace mulch w/white #57 stone

Scott,
Per your request please see the attached change order for removing mulch and adding 57 limerock.
Please sign and return and we will complete the work.

Thank you,

Nathan Stanley
Estimator
7745 US 1
St. Augustine, FL 32086
(904) 315-5395

On Tue, Oct 24, 2023 at 2:37 PM Scott Wright <swright@stellar.net> wrote:

Ben/Nathan, were you able to price this yet? Need asap. Thanks.

Scott Wright
Project Manager III
Stellar
o : 904-899-9808 | m : 904-832-3201
e : swright@stellar.net

From: Scott Wright <swright@stellar.net>
Sent: Monday, October 23, 2023 3:16 PM
To: ben@cvscape.com; info cvscape.com <info@cvscape.com>
Cc: James Childs <jchilds@stellar.net>

Subject: FS64 replace mulch w/white #57 stone
Importance: High

Item 2

Ben/Nathan, please provide price to remove mulch and replace with white#57 stone at 3 locations shown in attached photo. Thank you.

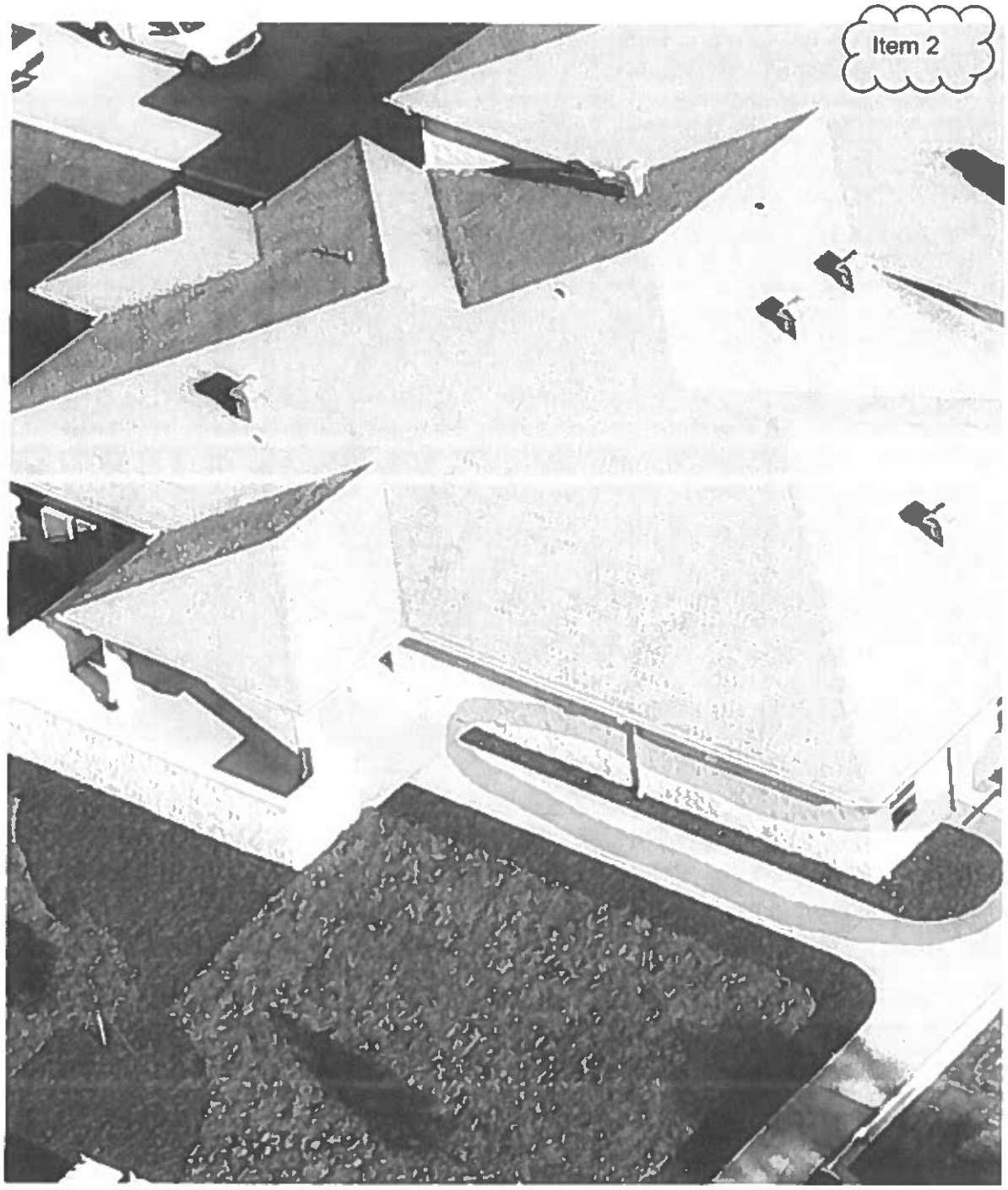

Scott Wright
Project Manager III
Stellar
o : 904-899-9808 | m : 904-832-3201
e : swright@stellar.net

Item 2

This email and any attachments are confidential and intended solely for the use of the intended recipients; unauthorized use is strictly prohibited. If you have received this email in error please notify the sender immediately. Unless otherwise stated, opinions expressed in this e-mail are those of the author and are not endorsed by the author's employer. Finally, the recipient should check this email and any attachments for the presence of viruses. The company accepts no liability for damage caused by any virus transmitted by this email.

stellar
TAKING SOLUTIONS FURTHER

Item 2

Position	Name	Hours	Contract Hourly Rate	175% Overhead per Contract	$Amount
Stellar Superintendent	James Childs	16	66.86	117.01	$ 1,872.08

Subcontractor	Description of Work		
S. David Flooring	Caulk slab cut joints per JFRD request at FS64 & FS65, color "Porpoise".		$18,528.00
		Total	$ 20,400.08

PROPOSAL

Item 2

Thomas DeTardo
S. David Flooring, LLC
4856 Victor St.
Jacksonville, FL 32207
Ph: 904-591-9102 Fax: 904-287-2743
thomas@sdavidflooring.com

Date: 11/13/23

PROPOSAL SUBMITTED TO: Scott Wright
Contact: swright@stellar.net
Contact:
Co Name: Stellar Group, Inc.
Address: 2900 Hartley Rd.
Jacksonville, FL 32257

Phone: 904.899.9808 Fax:

WORK TO BE PERFORMED AT:
Site Name: COJ Fire Stations #64 and #65
Address:

Customer Acceptance **Date**

Scope of Work: Deliver joint sealant, RS 88, to substrate saw cuts, FS 64 and 65. (Appx 1,345lf per location)

Joint Sealant Application

1. Clean/prepare joints for sealant installation.
2. Soap joint perimater surface prior to sealant application.
3. Deliver RS-88 to joints per specifications; Color: Porpoise.
4. Shave sealant flush with razor tooling.
5. Perform final cleaning/scrubber as required.

NOTE: Installation considering equipment and other immovable objects/structures will be performed within an industry, best case scenario. Equipment movement to be performed by others.

FS 64: $9,764 - $500 = $9,264
FS 65: $9,764 - $500 = $9,264
$18,528

*****Project offered as a single day operation per fire station location. Customer preparedness for application to be discussed prior to mobilization to ensure proper expectations towards temporary site performance interruptions.**

Project Breakdown:
Payroll: $1,500
Hotel: $250
Per Diem: $140
Material/Tax/Shipping: $6,635
Mark-Up: $1,239

TERMS: 50% deposit upon acceptance of agreement/Final payment upon completion.

*No repairs other than items expressly outlined above will be performed
*Power provided by customer (110v, 220v, 240v/3phs/60 amp and 480/3phs/60 amp - as applicable)
*Floor service area admissible only to flooring crew for duration of project and material curing period
*No demolition included with this proposal. Substrate is to be free of all tile, glues, adhesives, etc..
*Permanent lighting or equivalent must be in place prior to floor crew arrival.

*Proposal does not include sloping. System follows contour of existing slab unless otherwise proposed.
*All drains within installation area are to be flush/level with the substrate surface (not elevated).

Customer to provide dumpster for disposal of waste.

Item 2

SUBJECT: RFQ-DESIGN-BUILD SERVICES FIRE STATIONS NUMBERS: 36, 64, AND 65

BID # CDB-0127-19 **OPEN DATE: 2019-04-17**

COMPETITIVE SEALED PROPOSAL EVALUATION COMMITTEE

KIND AND BASIS OF CONTRACT: CONSTRUCTION – DESIGN/BUILD- REQUEST FOR QUALIFICATIONS

AGENCY: DEPARTMENT OF PUBLIC WORKS

BASIS OF AWARD: EVALUATION CRITERIA

NUMBER OF BIDS INVITED: 5 **NUMBER RECEIVED: 6** **OTHER: 0**

SUMMARY OF BIDS AND RECOMMENDED ACTIONS:

Recommend approval of Amendment 1 to Stellar Group, Inc . (contract # 71526-22), to provide 100% design, permits, and construction services for Fire Station 64, as indicated in the Scope and Fee Summary. known as Exhibit B in the amount $5,993,893.00. Total guaranteed maximum price not-to-exceed $6,180,368.11.

Funding for this award is to be encumbered by accounts: 32111.127001.565031.010103.00000000.00000.0000000 - $307,252.33
32111.127001.565051.010103.00000000.00000.0000000 - $5,686,640.67-
to be executed by contract amendment through Office of General Counsel.

ATTACHMENTS: Recommendation Memo, Exhibit "B", Previous Award(s)

ANALYST: JACLYN STAMOS

RESPECTFULLY SUBMITTED: DUSTIN FREEMAN, ACTING CHIEF PROCUREMENT DIVISION

CONCURRENCE BY: **Robin G. Smith, Chief, Engineering and Construction Management**

(ALL AWARD ACTIONS SUBJECT TO LAWFULLY APPROPRIATED FUNDS)
ACTION OF CSPEC COMMITTEE ON RECOMMENDATIONS ABOVE

MEMBERS APPROVING 5 MEMBERS DISAPPROVING 0 DATE: 10/6/2022

OTHER

ACTION OF AWARDING AUTHORITY DATE 10/6/2022

APPROVED ✓ DISAPPROVED:

OTHER:

SIGNATURE OF AUTHENTICATION

Brian Hughes
Chief Administrative Officer
For: Mayor Lenny Curry
Under Authority of:
Executive Order No: 2019-02

SUBJECT: RFQ-DESIGN-BUILD SERVICES FIRE STATIONS NUMBERS: 36, 64, AND 65

BID # CDB-0127-19 OPEN DATE: 2019-04-17

COMPETITIVE SEALED PROPOSAL EVALUATION COMMITTEE

KIND AND BASIS OF CONTRACT: CONSTRUCTION – DESIGN/BUILD- REQUEST FOR QUALIFICATIONS

AGENCY: DEPARTMENT OF PUBLIC WORKS

BASIS OF AWARD: EVALUATION CRITERIA

NUMBER OF BIDS INVITED: 5 NUMBER RECEIVED: 6 OTHER: 0

SUMMARY OF BIDS AND RECOMMENDED ACTIONS:

The Department of Public Works has completed negotiations with Stellar Group, Inc. for the Design Build Services for Fire Stations Numbers 36, 64, and 65.

Recommend approval of award to Stellar Group, Inc. to provide 90% design and preconstruction services for Fire Station No. 64. This incorporates the scope & fee summary, Exhibit "A" and requires a total estimated design time of 119 days from the Notice to Proceed. Total guaranteed maximum price not-to-exceed $186,475.11.

Funding for this award is to be encumbered by account: 010103.565031.1.32111.384020 to be executed by contract through Office of General Counsel.

ATTACHMENTS: Recommendation Memo, Exhibit "A", Previous Award(s)

ANALYST: BRYAN MATUS

RESPECTFULLY SUBMITTED: GREGORY PEASE, CHIEF PROCUREMENT DIVISION

CONCURRENCE BY: Robin G. Smith, P.E., Chief, Engineering and Construction Management

(ALL AWARD ACTIONS SUBJECT TO LAWFULLY APPROPRIATED FUNDS)
ACTION OF CSPEC COMMITTEE ON RECOMMENDATIONS ABOVE

MEMBERS APPROVING 5 MEMBERS DISAPPROVING 0 DATE: 12/9/2021

OTHER

ACTION OF AWARDING AUTHORITY DATE 12-13-21

APPROVED ✓ DISAPPROVED:

OTHER:

SIGNATURE OF AUTHENTICATION

Brian Hughes
Chief Administrative Officer
For Mayor Lenny Curry
Under Authority of
Executive Order No. 2019-02

SUBJECT: RFQ-DESIGN-BUILD SERVICES FIRE STATION#S: 36, 64 AND 65

BID # CDB-0127-19

OPEN DATE: 04/17/2019

COMPETITIVE SEALED PROPOSAL EVALUATION COMMITTEE

KIND AND BASIS OF CONTRACT:
CONSTRUCTION – DESIGN/BUILD- REQUEST FOR QUALIFICATIONS

AGENCY: DEPARTMENT OF PUBLIC WORKS

BASIS OF AWARD: EVALUATION CRITERIA

NUMBER OF BIDS INVITED: 5 NUMBER RECEIVED: 5 OTHER: 0

SUMMARY OF BIDS AND RECOMMENDED ACTIONS:
Subject bid was previously shortlisted for three firms and approved on 06/27/19; Interviews were held for the three shortlisted firms based on the final average scores, the following firms are listed alphabetically. The ranking of first, second and third designates the order of qualification of these firms to perform the required services:

2) Auld & White Constructors- 119.75
1) Stellar Group, Inc. - 128.50
3) The Haskell Group- 119.50

Pursuant to Section 2.6 – Award of Contract of the RFP, recommend approval for final list to begin negotiations with number one ranked firm Stellar Group, Inc.

Attachments: Recommendation Memo, Scoring Matrix, Section 2.6, Previous Award

BUYER Marilyn Laidler
MARILYN LAIDLER

RESPECTFULLY SUBMITTED
GREGORY PEASE, CHIEF
PROCUREMENT DIVISION

CONCURRENCE BY: John P. Pappas, P.E., Director, Public Works Department

(ALL AWARD ACTIONS SUBJECT TO LAWFULLY APPROPRIATED FUNDS)
ACTION OF CSPEC COMMITTEE ON RECOMMENDATIONS ABOVE

MEMBERS APPROVING 5 MEMBERS DISAPPROVING Ø DATE: 8/08/19

OTHER

ACTION OF AWARDING AUTHORITY DATE

APPROVED ✓ DISAPPROVED

OTHER:

SIGNATURE OF AUTHENTICATION

Brian Hughes
Chief Administrative Officer
For Mayor Lenny Curry
Under Authority of:

SUBJECT: RFQ-DESIGN-BUILD SERVICES FIRE STATION#S: 36, 64 AND 65

BID # CDB-0127-19

OPEN DATE: 04/17/2019

COMPETITIVE SEALED PROPOSAL EVALUATION COMMITTEE

KIND AND BASIS OF CONTRACT:
CONSTRUCTION – DESIGN/BUILD- REQUEST FOR QUALIFICATIONS

AGENCY: DEPARTMENT OF PUBLIC WORKS

BASIS OF AWARD: EVALUATION CRITERIA

NUMBER OF BIDS INVITED: 5 NUMBER RECEIVED: 5 OTHER: 0

SUMMARY OF BIDS AND RECOMMENDED ACTIONS:

Recommend approval to reject Hager Construction Company for not meeting the minimum requirement of completing a vertical project with a minimum cost of $2,500,000.00 within the last five (5) years.

The remaining five (5) proposals received for evaluation were found to be responsive, interested, qualified and available to provide the services required by the RFP. Based on the above the following firms listed alphabetically were determined to be the most qualified. The ranking of first, second and third designates the order of qualification of these firms to perform the required services:

3) Auld & White Constructors- 92.75
2) The Haskell Company- 95.00
1) The Stellar Group- 98.50

Pursuant to Section 2.6 – Award of Contract of the RFP, recommend approval to move forward to presentation/interviews before CSPEC.

Attachments: Recommendation Memo, Scoring Matrix, Bid Tabulation, Vendor Rejection Letter/Email, Section 2.6

BUYER MARILYN LAIDLER

RESPECTFULLY SUBMITTED GREGORY PEASE, CHIEF PROCUREMENT DIVISION

CONCURRENCE BY: Robin G. Smith, P.E., Chief, Engineering & Construction Management

(ALL AWARD ACTIONS SUBJECT TO LAWFULLY APPROPRIATED FUNDS)
ACTION OF CSPEC COMMITTEE ON RECOMMENDATIONS ABOVE

MEMBERS APPROVING 5 MEMBERS DISAPPROVING Ø DATE: 6/27/19

OTHER

ACTION OF AWARDING AUTHORITY DATE 6/27/19

APPROVED DISAPPROVED

OTHER:

SIGNATURE OF AUTHENTICATION