SUBJECT: RFQ- FOR DESIGN-BUILD SERVICES FOR VERTICAL/ARCHITECTURAL PROJECTS

BID #: CDB-0007-16

OPEN DATE: 2015-10-21

COMPETITIVE SEALED PROPOSAL EVALUATION COMMITTEE

KIND AND BASIS OF CONTRACT: CONSTRUCTION- DESIGN/BUILD

AGENCY: PUBLIC WORKS

BASIS OF AWARD: QUALIFICATIONS BASED

NUMBER OF BIDS INVITED: 4 **NUMBER RECEIVED: 9** **OTHER: 1**

SUMMARY OF BIDS AND RECOMMENDED ACTIONS:
Recommend approval to amend the award with Auld & White Constructors, LLC for additional modifications at Fire Station 74 (Amendment 13C), and to increase the amount by $135,053.09. Revised guaranteed maximum price not-to-exceed amount will be $4,260,815.09. Total revised estimated expenditure amount is $34,635,053.09.

This amendment is to be funded by account 32111.127001.565051.010102.00000000.00000.00000000 and to be executed by contract amendment through Office of General Counsel.

ATTACHMENTS: Recommendation Memo, Scope and Fee Schedule and Previous Awards

ANALYST: _____
ANNETTE BURNEY

RESPECTFULLY SUBMITTED: _____
GREGORY PEASE, CHIEF
PROCUREMENT DIVISION

CONCURRENCE BY: Robin G. Smith, P.E., Chief, Engineering and Construction Management

---

(ALL AWARD ACTIONS SUBJECT TO LAWFULLY APPROPRIATED FUNDS)
ACTION OF CSPEC COMMITTEE ON RECOMMENDATIONS ABOVE

MEMBERS APPROVING _____ MEMBERS DISAPPROVING _____ DATE: _____

_____ _____ OTHER: _____

_____ _____

_____ _____

_____ _____

_____ _____

ACTION OF AWARDING AUTHORITY DATE _____

APPROVED _____ DISAPPROVED _____

OTHER _____

SIGNATURE OF AUTHENTICATION _____

City of Jacksonville, Florida

Lenny Curry, Mayor

Department of Public Works
Engineering & Construction Management Division
214 N. Hogan Street, 10th Floor
Jacksonville, FL 32202
(904) 255-8762
www.coj.net

ONE CITY ONE JACKSONVILLE

February 7, 2022

TO: Gregory W. Pease
Chief of Procurement

THRU: John P. Pappas, P.E.
Director

FROM: Robin G. Smith, PE
Chief, Engineering & Construction Management

Keith Powers
Director, Jacksonville Fire & Rescue

Thomas G. McKnight
Capital Improvement Construction Manager

SUBJECT: CDB-0007-16 – Design-Build Services –Vertical/Architectural Projects – Fire Station 74 AMENDMENT 13C PO 625107-21

In accordance with Design/Build CDB-0007-16, Contract 9182-03, Fire Station 74 was awarded by Amendment 13A, in the amount of $4,100,000.00 to provide design, permitting and construction. Amendment 13B, in the amount of $25,762.00 was to address various modifications to the original scope as requested by JFRD. Amendment 13C is to address additional modifications to the original scope. Negotiations have resulted in the GMP amount of $135,053.09 as detailed on the attached Scope & Fee Summary, Exhibit O-3, with no change to the original number of days allocated in 13A. Auld & White Constructors, LLC is committed to meeting the 10% JSEB participation goals established for this contract.

Accordingly, this is to recommend that Amendment 13A to Contract No #9182-03, originally executed August 9, 2021, between the City and Auld & White Constructors, LLC. for Fire Station 74 be amended to incorporate the attached Scope and Fee Summary, Exhibit O-3 to increase the GMP by $135,053.09 to a new GMP amount of $4,260,815.09, known as Amendment 13C.

Funding for this project should be as follows:

ACCOUNTS:	TOTAL
32111.127001.565051.010102.00000000.00000.0000000	
010102	
FRCP Fire Stations Capital Project- Fire Control	
565050	
1	
32111-381910	
$135,053.09	$135,053.09

RGS/lw

Attachment: Exhibit O-3 - Scope & Fee Summary

AULD WHITE CONSTRUCTORS, LLC
FIRE STATION NO. 74
CONTRACT # 9182-03

CHANGE ORDER NO 2

NBR	MASTER ITEM DESCRIPTION	QUANTITY	UOM	UNIT COST	NET ADDITION	NET DELETION	NET TOTALS
	NEW ITEMS -						
1	Low Voltage Modifications	1.00	LS	$90,282.51	$90,282.51		
	JUSTIFICATION: PCO 1 - Includes cost associated with the changes requested by COJ ITD on CCD #1 drawing revisions/ COJ red lined drawings, and the low voltage meeting held on 11/15/21. Also includes turn key quote for the Purvis System.						
2	Add Data/Power in Chief's Room and Fitness Room, LED Light Kits	1.00	LS	$13,771.25	$13,771.25		
	JUSTIFICATION: PCO 8 - Includes the cost associated with the addition of data and power outlets in the Chief's Room, added data, telephone and power in the Fitness Room, added LED Light Kits at overhead and four fold doors in Apparatus bay, and credit for deletion of the strobe lights originally included for the overhead doors.						
3	Condenser Cages	1.00	LS	$1,478.29	$1,478.29		
	JUSTIFICATION: PCO 10 - Includes the cost associated with installing a cage around the split system condenser that conditions the fitness room, which is located outside of the fenced area.						
4	App Bay Storage Room [125] Cipher Lock	1.00	LS	$984.00	$984.00		
	JUSTIFICATION: PCO 14 - Includes the cost for addition of a cipher lock at the Apparatus Bay Storage Room [125], per JFRD request.						
5	Chief's Room Modifications	1.00	LS	$194.00	$194.00		
	JUSTIFICATION: PCO 15 - Includes the cost associated with deletion of linen closet in Chief's Room and substituting with a locker, per JFRD request.						
6	Overhead Door Light Curtain Sensors	1.00	LS	$4,851.00	$4,851.00		
	JUSTIFICATION: PCO 16 - Includes the cost to add (3) liftmaster light curtains at the overhead sections doors, consisting of Eight LEDS per side and 22 cross beams to produce invisble curtain of infrared light for increased vehicle detection capability.						
7	JEA Revised Electrical Site Plan	1.00	LS	$21,222.04	$21,222.04		
	JUSTIFICATION: PCO 17 - Costs associated with JEA transformer relocation, resulting in additional conduit and secondary wiring required, per JEA plan mark ups.						
8	Solid Surface Counter Tops	1.00	LS	$3,293.00	$3,293.00		
	JUSTIFICATION: PCO 18 - Includes the cost to install solid surface countertops in all restrooms in lieu of plastic laminate, per JFRD request. Includes Wash Room [116], Restroom [121] and Chief's Toilet [113].						
9	Delete Doors 115A and 120A	1.00	LS	-$1,023.00		-$1,023.00	
	JUSTIFICATION: PCO 20 - Credit to delete doors 115A and 120A, per JFRD request.						
	NEW ITEMS SUBTOTAL				$136,076.09	($1,023.00)	
	NEW ITEMS NET TOTAL						**$135,053.09**
	NET TOTAL CHANGE ORDER NO. 2						**$135,053.09**

AULD WHITE CONSTRUCTORS, LLC
FIRE STATION NO. 74
CONTRACT # 9182-03

CHANGE ORDER NO. 2

NBR	MASTER ITEM DESCRIPTION	QUANTITY	UOM	UNIT COST	NET ADDITION	NET DELETION	NET TOTALS
	NEW ITEMS -						
1	Low Voltage Modifications	1.00	LS	$90,282.51	$90,282.51		
	JUSTIFICATION: PCO 1 - Includes cost associated with the changes requested by COJ ITD on CCD #1 drawing revisions/ COJ red lined drawings, and the low voltage meeting held on 11/15/21. Also includes turn key quote for the Purvis System.						
2	Add Data/Power in Chief's Room and Fitness Room, LED Light Kits	1.00	LS	$13,771.25	$13,771.25		
	JUSTIFICATION: PCO 8 - Includes the cost associated with the addition of data and power outlets in the Chief's Room, added data, telephone and power in the Fitness Room, added LED Light Kits at overhead and four fold doors in Apparatus bay, and credit for deletion of the strobe lights originally included for the overhead doors.						
3	Condenser Cages	1.00	LS	$1,478.29	$1,478.29		
	JUSTIFICATION: PCO 10 - Includes the cost associated with installing a cage around the split system condenser that conditions the fitness room, which is located outside of the fenced area.						
4	App Bay Storage Room [125] Cipher Lock	1.00	LS	$984.00	$984.00		
	JUSTIFICATION: PCO 14 - Includes the cost for addition of a cipher lock at the Apparatus Bay Storage Room [125], per JFRD request.						
5	Chief's Room Modifications	1.00	LS	$194.00	$194.00		
	JUSTIFICATION: PCO 15 - Includes the cost associated with deletion of linen closet in Chief's Room and substituting with a locker, per JFRD request.						
6	Overhead Door Light Curtain Sensors	1.00	LS	$4,851.00	$4,851.00		
	JUSTIFICATION: PCO 16 - Includes the cost to add (3) liftmaster light curtains at the overhead sections doors, consisting of Eight LEDS per side and 22 cross beams to produce invisble curtain of infrared light for increased vehicle detection capability.						
7	JEA Revised Electrical Site Plan	1.00	LS	$21,222.04	$21,222.04		
	JUSTIFICATION: PCO 17 - Costs associated with JEA transformer relocation, resulting in additional conduit and secondary wiring required, per JEA plan mark ups.						
8	Solid Surface Counter Tops	1.00	LS	$3,293.00	$3,293.00		
	JUSTIFICATION: PCO 18 - Includes the cost to install solid surface countertops in all restrooms in lieu of plastic laminate, per JFRD request. Includes Wash Room [116], Restroom [121] and Chief's Toilet [113].						
9	Delete Doors 115A and 120A	1.00	LS	-$1,023.00		-$1,023.00	
	JUSTIFICATION: PCO 20 - Credit to delete doors 115A and 120A, per JFRD request.						
	NEW ITEMS SUBTOTAL				$136,076.09	($1,023.00)	
	NEW ITEMS NET TOTAL						**$135,053.09**
	NET TOTAL CHANGE ORDER NO. 2						**$135,053.09**

AULD & WHITE
CONSTRUCTORS • LLC

Item No. 1

1/10/2022

Re: Fire Station No. 74 E-Town
AWC Project Number: 1733-

Mr. Daryl Weinstein
City of Jacksonville
214 North Hogan Street, 10th Floor
Jacksonville, FL 32202

Dear Mr. Weinstein:

Please accept this letter as our Proposed Change Order No. 1 for the following additional work:

This change order includes additional cost for the changes that occurred through CCD #1 drawing revisions, COJ red-lined drawings, and the low voltage meeting held on 11.15.21.

This change order is a turn key quote for the Purvis System.

TOTAL AMOUNT OF THIS PROPOSED CHANGE NO. 1.....**$90,282.51**

Please indicate your approval and Owner's acceptance by signing in the space provided below and return one (1) copy for our files. Upon acceptance of same, we will prepare a Change Order for execution.

Sincerely,

Brett Nansen

Brett Nansen
Project Manager

c:

Attachments

ACCEPTED:

City of Jacksonville

BY: _____

DATE: _____

Change Order Request

Item No. 1

AULD & WHITE CONSTRUCTORS, LLC
4168 Southpoint Parkway, Suite 101
Jacksonville, FL 32216
Phone: 904-296-2555

Owner : City of Jacksonville
214 N. Hogan Street, 10th Floor
Jacksonville, FL 32202

Project: 1733- Fire Station No. 74 E-Town
11010 Meeting Street
Jacksonville, FL 32256

Change Order Request # : 1 - Low Voltage Changes (CCD #1, Red-line Mark-ups, PURVIS Clar)

Phase	Description	Cost Type	Est Units	Est HRs	UM	Est Unit Cost	Estimated Cost
16011.	ELECTRICAL SUBCONTRACT	2 SUB	0.00	0.00	LS	0.00 $	79,753.51

Bond	0.90%	805.00
Builders Risk	0.58%	466.00
General Liability Insurance	1.08%	862.00
Labor Burden	55.00%	0.00
Misc Tools & Equipment	12.00%	0.00
Overhead and Profit	10.00%	8,108.00
Polution Insurance	0.32%	288.00
Printing Costs	0.00%	0.00
Sales Tax	7.50%	0.00
	Total For Change Order	**$90,282.51**

Approved By: City of Jacksonville

Signed: _____

Date: _____

Submitted By: AULD & WHITE CONSTRUCTORS, LLC

Signed: _____

Date: _____

Item No. 1

MARDANT ELECTRICAL CONSTRUCTION CO. INC.

Mardant Electrical Construction Co.

CHANGE ORDER #10

12/2/2021

Fire Station 74 (Etown Fire Station)
Etown Parkway, Jacksonville, Florida

Brett Nansen
Auld & White Constructors, LLC

Changes to the Low Voltage systems per red line drawings and new drawings. This change request is from my Sub Contractor.

1.	Low Voltage changes	~~$28,323.90~~

Low Voltage changes (see attached)	$24,566	~~$25,749.00~~
Total		~~$25,749.00~~
10% P&O	$2,456.60	~~$2,574.90~~
Grand Total	$27,022.60	~~$28,323.90~~

Bob Winstead – Estimator/Project Manager *12-2-2021*

Subcontractor signature and title Date

Contractor signature and title Date

Item No. 1

Subcontractor back-up for proposal above.

NETWORK CABLING SERVICES, INC.

365 College Dr. Middleburg FL 32068
Phone: 904-276-2695 Fax: 904-276-0716
Email: cnobles@ncscabling.com

Date: 11/30/2021

To: T&M Electric

Re: Fire Station #10 Updated Quote

SCOPE OF WORK:

NCS will provide necessary labor and materials to install the following:

- Install (43) new Cat6 cables. Cables will be terminated in new 2-post Rack, on new patch panels. Cables will be terminated, faceplated, labeled, and tested upon completion.
- Install (18) paging speakers with individual room volume controls. Each speaker will be wired with an 18/2 shielded cable. Horn Speakers to replace Loud Ringers. Paging system head end will be re-used.
- Extend existing 50-pair cable to rack, terminate on patch panel.
- Splice 12-strand single mode fiber above ceiling and extend to new rack. Terminate in LIU, test, labels upon completion.

All cables will be installed, terminated, labeled, and tested upon completion.

Our total for this project is: **$24,566.00**

Excludes:
Conduit/backboxes/plywood backboards
Any Cable tray (other than ladder tray in MDF/IDFs)
Patch cabling/installation thereof
Any active electronics (Light Panels, EDAS Equipment, UPSs, Switches, Routers, servers, etc.)
Any Fire Alarm or associated devices.

Thank you for the opportunity,

Cody Nobles
Project Manager
Network Cabling Services, Inc.

Item No. 1

MARDANT ELECTRICAL CONSTRUCTION CO. INC.

Mardant Electrical Construction Co.

CHANGE ORDER #9

Fire Station 74 (Etown Fire Station)
Etown Parkway, Jacksonville, Florida

12/2/2021

Brett Nansen
Auld & White Constructors, LLC

Provide and install (1) 24"x24"x24" quazite handhole with (1) 3-cell innerducts in each of the (2) 4" conduits for communications.

1.	Install (1) 24" Quazite hand hole, and 3 cell innerduct in each of the (2) 4" comm conduits. Conduits are 60' each	$5,678.24

Material	$2,983.30
Tax 7.5%	$223.74
Total	$3,207.04
Labor (23 manhours) 23 x $85.00	$1,955.00
Total	$5,162.04
10% P&O	$516.20
Grand Total	$5,678.24

Bob Winstead – Estimator/Project Manager *12-2-2021*

Subcontractor signature and title Date

Contractor signature and title Date

Item No. 1

MARDANT ELECTRICAL CONSTRUCTION CO. INC.

Mardant Electrical Construction Co.

CHANGE ORDER #13

Fire Station 74 (Etown Fire Station)
Etown Parkway, Jacksonville, Florida

12/7/2021

Brett Nansen
Auld & White Constructors, LLC

Provide backbox and ¾" stub to above ceiling for Acknowledge buttons in Bunker/Gear 132, Chiefs Room 112, Corridor 115, Corridor 120, and Dispatch 102.

1.	Provide backbox and conduit stub for Acknowledgment buttons	$507.67

Material	$113.05
Tax @ 7.5%	$8.47
Material Total	$121.52
Labor (4 manhours) 4 x $85.00	$340.00
Total material, and labor	$461.52
10% P&O	$46.15
Grand Total	$507.67

Bob Winstead – Estimator/Project Manager *12-2-2021*

Subcontractor signature and title Date

Contractor signature and title Date

PURVIS PRICE QUOTATION - Jacksonville Fire and Rescue Department

PURVIS SYSTEMS

Tax ID #: 11-2299301

Date: November 19, 2021
Quote #: PC2022-082
Agency: Jacksonville Fire and Rescue
Address: 515 N. Julia St
Jacksonville, FL 32202
Agency POC: James Gunnoe
E-mail Jgunnoe@coj.net
Phone #: 904-255-7777

Item No. 1

88 Silva Ln
Middletown, RI 02842
Sales: J. Mascola 401-619-2466
jmascola@purvis.com
Contracts: M Craft 401-845-8401
mcraft@purvis.com

TASK:

The Jacksonville Fire and Rescue Department (JFRD) requests PURVIS Systems to procure, implement, and install the PURVIS Fire Station Alerting System™ (PURVIS FSAS™) for JFRD Station 74. Please refer to the attached "PURVIS FSAS SOW JFRD Fire Station 74" for additional details associated with our quote.

HARDWARE:

Item	PURVIS Part #	Qty	Unit Price	Unit Price	Extended Price
Station Control Unit (SCU) - No Screen	315-030004-131-NN	1	$17,500.00	$17,500.00	$17,500.00
SCU Remote Touch Screen (RTS) - 22"	315-250005-131	1	$605.00	$605.00	$605.00
Remote Touch Screen Video Distribution - VGA TX/RX	315-250300-131	1	$410.00	$410.00	$410.00
Vesa Mount for VGA Receiver	315-250100-131	1	$50.00	$50.00	$50.00
Wall Mounting Bracket, Tilt, RTS Monitor	315-190302-131-RTS	1	$25.00	$25.00	$25.00
USB Extender, 1-Port	315-250202-131	1	$105.00	$105.00	$105.00
24 Port Unmanaged Network Switch	315-290005-131-LAN	1	$225.00	$225.00	$225.00
Uninterruptible Power Supply (UPS) - 2U - Line Interactive 1500VA	315-040308-131	1	$935.00	$935.00	$935.00
Rip and Run Thermal Printer	315-170101-131	1	$725.00	$725.00	$725.00
Rip and Run Thermal Printer Stand	315-170102-131	1	$125.00	$125.00	$125.00
2.4 Mil Thermal Printer Paper Case (6 rolls/case)	315-170201-131	1	$130.00	$130.00	$130.00
Message Board - 27" Monitor	315-190000-131-27	12	$265.00	$265.00	$3,180.00
Message Board HDMI Video Receiver	315-190400-131	12	$100.00	$100.00	$1,200.00
Wall Mounting Bracket, Swing Arm/Tilt, 32" to 55" Monitor	315-190300-131	12	$60.00	$60.00	$720.00
16 Port Unmanaged Message Board Switch	315-290002-131-MB	1	$300.00	$300.00	$300.00
Remote Push Button, Green, 22mm, Illuminated - Acknowledgment	315-280004-131-G	5	$60.00	$60.00	$300.00
TOTAL					$26,535.00
Sales and Use Tax					$0.00
TOTAL HARDWARE					**$26,535.00**

Hardware Prices do not include installation or any system configuration, if applicable. Any applicable manufacturer warranties will be extended to the customer.
Hardware lead time is at least 12 weeks after receipt of order (ARO)

SOFTWARE:

Item	PURVIS Part #	Qty	Unit Price	Unit Price	Extended Price
Text-to-Speech (TTS) Voice Module Software License (Perpetual)	315-990400-120	1	$1,410.00	$1,410.00	$1,410.00
Station Control Unit (SCU) FSAS Software License (Perpetual)	315-990300-120	1	$300.00	$300.00	$300.00
TOTAL					**$1,710.00**
Sales and Use Tax					$0.00
TOTAL SOFTWARE					**$1,710.00**

FIXED PRICE SERVICES:

Description	Unit Price	Unit Price	Price
Implementation Services (Project Management, Configuration, Integration, Test, Installation Support, & Training)	$6,500.00	$6,500.00	$6,500.00
Installation Services	$11,500.00	$11,500.00	$11,500.00

Freight/Shipping & Handling	$300.00	$300.00
1 Year Warranty & Maintenance	Included	$0.00
TOTAL SERVICES		**$18,300.00**

GRAND TOTAL	**$46,545.00**

PAYMENT MILESTONES:

Key Milestone	Deliverable	Payment Amount
Milestone # 1	Delivery and installation of FSAS Hardware	$37,236.00
Milestone # 2	Final Testing and Cutover	$9,309.00

SALES AND USE TAX: Any required sales and use tax not identified in this quote is responsibility of the quote recipient or Fire Station Alerting System end-user. PURVIS is not responsible for the collection of any required taxes and payments to any tax collection agencies.

PAYMENT TERMS: Net 30

VALIDITY: This FFP Quote is valid for 90 days

WARRANTY: First Year Remote and On-Site Warranty & Maintenance begins upon final system acceptance by the Jacksonville Fire Rescue.

END-USER LICENSE/MAINTENANCE AGREEMENTS: All purchased hardware and software resulting from this quote will be licensed, warrantied and maintained under the existing PURVIS FSAS End-User License Agreement and PURVIS FSAS Warranty, Maintenance and Service Agreement - with the Jacksonville Fire and Rescue Department.

EXPORT CONTROL: Products purchased or received under any resulting Sale may be subject to export control laws, restrictions, regulations, and orders of the United States. Customer agrees to comply with all applicable export laws, restrictions and regulations of the United States or foreign agencies or authorities, and shall not export, or transfer for the purpose of re-export any product to any prohibited or embargoed country or to any denied, blocked or designated person or entity as mentioned in any United States or foreign law or regulation.

STATEMENT OF WORK (SOW)
PURVIS FIRE STATION ALERTING SYSTEM
FOR JACKSONVILLE FIRE RESCUE DEPARTMENT

1.0 Scope

The Jacksonville Fire Rescue Department (JFRD) seeks the configuration, installation and implementation of an IP-based PURVIS Fire Station Alerting System™ (PURVIS FSAS™) (FSAS) for their new Fire Station 74. In order for the system to be fully functional in the existing Fire Station, the system must interface with the existing Jacksonville Fire Rescue Department PURVIS FSAS. The PURVIS FSAS is integrated with the Motorola Premiere One CAD system at the City's Dispatch Center utilizing Motorola's interface to the PURVIS FSAS Application Programming Interface (API). With this interface in place, the PURVIS FSAS must automatically transmit incident detail from the CAD system to the new Fire Station via Jacksonville Fire Rescue Department's IP network. The project includes the purchase, implementation, and installation of the PURVIS FSAS fire station-based control and alerting equipment at the new Fire Station. The project does not include the installation of any required 120VAC power, conduit, back boxes, amplifier, speakers (including wiring), and wiring for the acknowledgment buttons and Message Boards.

2.0 Task Description

The scope and tasks identified in this statement of work represent the complete PURVIS FSAS implementation for Jacksonville Fire Rescue Department (JFRD). PURVIS will provide the JFRD with the PURVIS Fire Station Alerting System and the PURVIS Team will perform the following tasks in support of the system implementation:

Task A. FSAS Procurement, Assembly, Configuration, and Installation

PURVIS will procure, assemble, configure, and install the PURVIS FSAS Fire Station 74 equipment for Jacksonville Fire Rescue Department. All system design and software components will be based on the current PURVIS FSAS Station Control Unit (SCU). No new custom software development or new software functionality is included with this implementation.

As part of the project planning phase, PURVIS will work with Jacksonville Fire Rescue Department to define a System Configuration Document and a Network Configuration Document. These two documents define the JFRD's technical and operational details that will be used by the PURVIS Engineering organization to develop, configure and test the requirements of the JFRD's FSAS system.

Following project start and as part of the implementation phase project kickoff, PURVIS will work with JFRD to collect the information required to complete the two configuration documents. The customer's input for these documents is crucial, since incorrect or incomplete information may potentially impact the project's resources and schedule.

PURVIS will configure the PURVIS FSAS Station Control Unit to meet the System Technical Requirements provided below.

SYSTEM TECHNICAL REQUIREMENTS

The following PURVIS FSAS components are required for Jacksonville Fire Rescue Department at Fire Station 74:

1. PURVIS FSAS Station Control Unit (Qty 1)

    a. The delivered system includes one (1) PURVIS FSAS Station Control Unit at JFRD Fire Station 74. The PURVIS FSAS SCU receives incidents/alerts and activates all appropriate station electronics, as well as playing tones and messages over the station speakers.

2. PURVIS FSAS Station Alerting Electronics:

    a. The delivered system includes audio and visual alerting electronics that are identified in PURVIS Quote No. PC2022-082. The specific quantities and locations of the alerting devices have been defined by Jacksonville Fire Rescue Department.

Task B. System Testing.

PURVIS will be responsible for the conduct of system integration, verification and validation testing. As part of this testing, PURVIS utilizes an overall Acceptance Test Plan that documents these activities as well as the Functional Acceptance Testing. PURVIS will update existing PURVIS FSAS test scripts to reflect the JFRD FSAS configuration.

PURVIS will also conduct Functional Acceptance Testing, with the Jacksonville Fire Rescue Department personnel witnessing this test. PURVIS FSAS Test Scripts will be used as the basis of the Functional Acceptance Testing. Successful completion of Acceptance Testing will constitute system acceptance.

Task C. Project Management Services.

PURVIS will provide project management services in support of the procurement, assembly, configuration, testing, integration, and installation of the PURVIS FSAS into the Jacksonville Fire Rescue Department Fire Station 74.

PURVIS will provide services to coordinate, lead, monitor and report all project activities. Services include scheduling, status reporting, coordinating activities of vendors, identifying Jacksonville Fire Rescue Department and other agency dependencies, and ensuring completion and acceptance of all activities.

PURVIS will participate in regularly scheduled status meetings/conference calls with JFRD. Meeting participants will include, at minimum, the JFRD Project Manager and PURVIS Project Manager as well as required individuals based on the agenda items defined for that specific meeting.

PURVIS will provide a project status report every other week that will include:

- Progress against schedule
- Key accomplishments for the reporting period
- Short-term upcoming tasks/activities
- Identification of project risks and mitigation options
- Open and closed action item lists.

Task D. Training.

In support of the FSAS implementation, the PURVIS Team will provide the following remote training:

- Training Course for Fire Personnel. The training modules below will be provided in a "train the trainer" format for up to ten (10) personnel. One training session will be provided, with a total duration of approximately 30 minutes.
    - FSAS Station Control Unit Module (30 minutes).

Task E. Warranty/Maintenance.

PURVIS will provide a Remote and On-site Warranty on all parts and labor for a period of one year from final system acceptance by Jacksonville Fire Rescue Department. Warranty services will be provided in accordance with the PURVIS FSAS Warranty, Maintenance and Service Agreement.

Upon the expiration of the initial one-year Warranty period, Annual Maintenance may be purchased as an option that may be renewed each year.

3.0 Project Schedule

PURVIS will work with the JFRD to mutually develop a comprehensive implementation schedule as part of the project kickoff activities.

The project schedule will be monitored weekly, formally updated with any required changes, and distributed on a monthly basis to all project team members.

4.0 Assumptions

The scope of this SOW is limited to the equipment, software and documentation identified within the SOW. Requests to procure and/or modify any additional equipment, software and/or documentation will be considered out of scope.

JFRD's Role

In order for PURVIS to fulfill project requirements and avoid delays, JFRD will perform the following:

JFRD

- Assign a primary point of contact for the project.
- Key project team members will participate in regularly scheduled project meetings.
- Ensure PURVIS has timely access to all necessary physical locations during the project. Communicate all project activities to dispatch and station personnel.
- Make dispatch and fire station operational personnel available to provide operational data necessary for system configuration.
- Make personnel available to approve recommended acceptance test procedures and to participate in the execution of these procedures.
- Provide approval of all PURVIS documentation within 10 working days of delivery.

Hardware Requirements

- Provide a fire station radio within 100' of the PURVIS FSAS Station Control Unit (SCU) in the fire station.
- The following FSAS hardware will be installed in the JFRD supplied station equipment rack:

Item	Power Requirements	Environment Requirements	
		Space Requirements	Other Requirements
Station Control Unit	Input: 120VAC, 20 Amp outlet. Power will be supplied from the PURVIS provided UPS.	Rack Mounted - 3U of 19" rack space, depth of 24".	To ensure system longevity and reliability, the SCU operating temperature is 32° F to 100° F
Remote Touch Screen (RTS) Video Distribution	Input: 120VAC, 15 Amp outlet. Power will be supplied from the PURVIS provided UPS.	Dimensions: 3.5x3.1x1.2 in Weight: 1.2 lbs.	To ensure system longevity and reliability, the operating temperature range is 32° F to 100° F.
24 Port Unmanaged Network Switch	Input: 120VAC, 15 Amp outlet. Power will be supplied from the PURVIS provided UPS.	Rack Mounted - 1U of 19" rack space, depth of 16".	To ensure system longevity and reliability, the operating

			temperature range is 32° F to 100° F.
16 Port Unmanaged Message Board Switch	Input: 120VAC, 15 Amp outlet. Power will be supplied from the PURVIS provided UPS.	Rack Mounted - 1U of 19" rack space, depth of 16".	To ensure system longevity and reliability, the operating temperature range is 32° F to 100° F.
Uninterruptible Power Supply	Input: A single dedicated 120V, 20AMP circuit in the fire station with a minimum of one outlet. Power termination shall be located within 5 feet of the PURVIS FSAS UPS in the station.	Rack Mounted - 2U of 19" rack space. Depth of 20". Weight: 58 lbs	To ensure system longevity and reliability, the operating temperature range is 32° F to 100° F.

Power Requirements

- Provide all 120VAC power for the PURVIS FSAS devices:

  a. Provide one 120V, 20AMP dedicated circuit with a duplex outlet within 5 feet of the PURVIS provided Uninterruptable Power Supply for the PURVIS FSAS rack equipment identified above.

  b. Provide one 120V, 15AMP duplex outlet within 5 feet of the Remote Touch Screen, Printer, and each Message Board.

- PURVIS FSAS devices connected to the PURVIS provided UPS in the station will be limited to the following: Station Control Unit, RTS Video Distribution, Network Switch, and Message Board Switch. PURVIS recommends that the JFRD provided Audio Amplifier also be connected to the UPS.

Network

- Provide routing on the Dispatch Center's network from the existing Central Server and the station SCU (within 30 calendar days of project start). Network routing between the Dispatch Center and the JFRD Fire Station shall be designed, implemented and tested by Jacksonville Fire Rescue Department.

- The bandwidth required from the FSAS Central Servers to the FSAS Station Control Unit (SCU) are minimal, with a compressed incident message size of around 1200-1300 bytes. A connection in excess of 5-10KB/s is required. For software updates and maintenance over the network, a bandwidth in excess of 1Mb/s is recommended, but not required.
- Provide the static WAN IP addresses as required for the FSAS Station Control Unit.

- Provide an Ethernet TCP/IP based physical connection for the FSAS Station Control Units.
- Implement firewalls as required for FSAS at the Fire Station. Any hardware, software and services required to implement the firewalls are the responsibility of the **JFRD.**
- Provide one (1) Ethernet network switch connection ports at the fire station for the PURVIS FSAS SCU.
- Provide PURVIS with remote access to the FSAS via a browser-based remote login software such as Bomgar.

Radio

- Perform all radio or console programming changes required to support the FSAS receiving automated audio over radio. This includes channel/talk group and any other custom configuration (within 45 calendar days of project start) PURVIS will provide guidance in programming.

- Maintain all radio equipment required for FSAS communications. This includes preventive maintenance, signal strength, issues resolution, software updates and other support.

- Provide a single point of contact for all radio related issues.

- Provide, install, configure, test and maintain a primary radio at the fire station. The primary radio will be used for monitoring the radio and redundant alerting.

- For the interface between the station radio and the SCU, provide the physical cable connection at the radio end. PURVIS will provide the connection at the SCU end.

E-mail Notifications

- Supply the contact information for the individuals to be notified of system trouble via auto-generated email notifications (within 30 calendar days of project start).

Training

- Ensure all personnel scheduled for training are present at schedule time(s).

Fire Station Installation

- PURVIS assumes that the PURVIS Team will have full and timely access to the installation site on the date(s) specified in the Project Schedule. Access on each date will be all day (7:30am – 5:00pm local time).

- JFRD provided equipment
    a. Provide one (1) JFRD supplied house light control that PURVIS will connect to activate based on an alert. JFRD must provide relay timing and control

requirements and is responsible for the installation and connection of the control wire to the house light control.

b. Provide working amplifier, speakers, and associated wiring. JFRD is responsible for ongoing maintenance and repair of the station amplifier and speakers.
c. Provide wiring from the FSAS equipment rack to the FSAS Message Boards, FSAS Printer, and FSAS Acknowledgement buttons.

- Fire Station Repair
  a. Any ceiling tiles damaged during installation will be replaced with similar tiles but exact color and type match cannot be guaranteed.
  b. Any damaged paint / drywall will be repaired with similar colors but exact color match cannot be guaranteed.

Warranty/Maintenance

- Provide timely on-site access to all locations to necessary PURVIS maintenance personnel as needed
- Provide PURVIS with remote access to the PURVIS FSAS via VPN tunnel or secure Bomgar.

5.0 System Acceptance

System Acceptance will be based on successful execution of the Functional Acceptance Testing using the FSAS Test Scripts provided by PURVIS. Successful execution is defined as tests that are run with no major system problems identified. Major system problems are problems which prevent dispatches from being announced over the correct radio channel.

6.0 Customer Acknowledgement

I acknowledge that I have read, and understand, the Statement of Work, and all Project Assumptions.

_____
Name

_____ _____
Signature Date

These red lines are included in CCD #1 revised drawings dated 8/3/21.

(1) COMM PLAN NOTES:

1. MOUNT RECEPTACLE WITH TV OUTLET BEHIND WALL MOUNTED FLAT PANEL TV, SEE ARCHITECTURAL DRAWINGS FOR EXACT LOCATION PRIOR TO ROUGH-IN.
2. FIELD VERIFY EXACT LOCATIONS AND MOUNT RECEPTACLE AND DATA OUTLET AT 7'-6". ROUTE ALL DATA CABLING TO APPARATUS LIGHTING CONTROL PANEL (ALP). REFER TO ALP OUTLET MOUNTING DETAIL FOR ADDITIONAL REQUIREMENTS. SYSTEM IS PROVIDED BY OTHERS.
3. POWER DEVICES SHOWN FOR REFERENCE ONLY.
4. OWNER PROVIDED APPARATUS LIGHTING CONTROL PANEL (ALP). PROVIDE ALL INTERCONNECTIONS, WIRING, CONDUIT etc... AS REQUIRED FOR A COMPLETE LIGHTING CONTROL SYSTEM. VERIFY EXACT LOCATION WITH SUPPLIER PRIOR TO ROUGH-IN.
5. CONTRACTOR TO PROVIDE 4"X4"X2 1/8" J-BOX FOR ANTENNA ABOVE CEILING.
6. THE PURVIS FSAS SHALL BE WIRED TO A TIMER SWITCH SUCH THAT IT WILL NOT SOUND AFTER A PRESET TIME.
7. OUTDOOR SPEAKER SHALL AV 70V X-FMR. (BOGEN)
8. MOUNTED AT 15'-0" TO CENTER AFG ON SMOOTH CMU WALL.
9. TIMER FOR PURVIS FSAS AND BOGEN SPEAKERS.
10. COMMUNICATIONS RACK, PROVIDED AND INSTALLED BY EC.
11. RESET BUTTON BOX FOR TRIP-LIGHT. PROVIDE (2) 1-PAIR #18 AWG SHIELDED TWISTED PAIR CABLES TO TELECOM CLOSET (1 PAIR FOR LED INDICATOR; 1 PAIR FOR RESET BUTTON) BELDEN 8760 OR EQUAL. TYPICAL
12. PROVIDE RED PLACARD WITH WHITE LETTERING TO READ "EMERGENCY"
13. MOUNT AT 5' AFF (WALL PHONE, SINGLE VOICE, TWO STUDS.
14. EC TO PROVIDE 4"X4"X2 1/8" J-BOX BELOW COUNTER IN KNEE SPACE. J-BOX SHALL BE ACCESSIBLE WITHOUT MODIFYING NEW MILLWORK. PROVIDE 1-1"C. TO J-BOX ABOVE CEILING.
15. PROVIDE 1"C WITH RG58 COAXIAL CABLE(S) TO ROOF ANTENNA. COORDINATE ANTENNA LOCATION AND QUANTITY OF CABLES WITH OWNER.
16. COW PROVIDED EDAS COMPUTER STATION SHALL BE INSTALLED ON TOP OF COUNTER WORK. VERIFY EXACT LOCATION WITH OWNER PRIOR TO ROUGH-IN.
17. PROVIDE 6"X6"X4" J-BOX WITH 1"C. AND (4) PAIRS OF #18 AWG TWISTED PAIR, PLENUM RATED (CMP) STRANDED CABLES. TERMINATE ON THE BACKBOARD IN COMM RM.

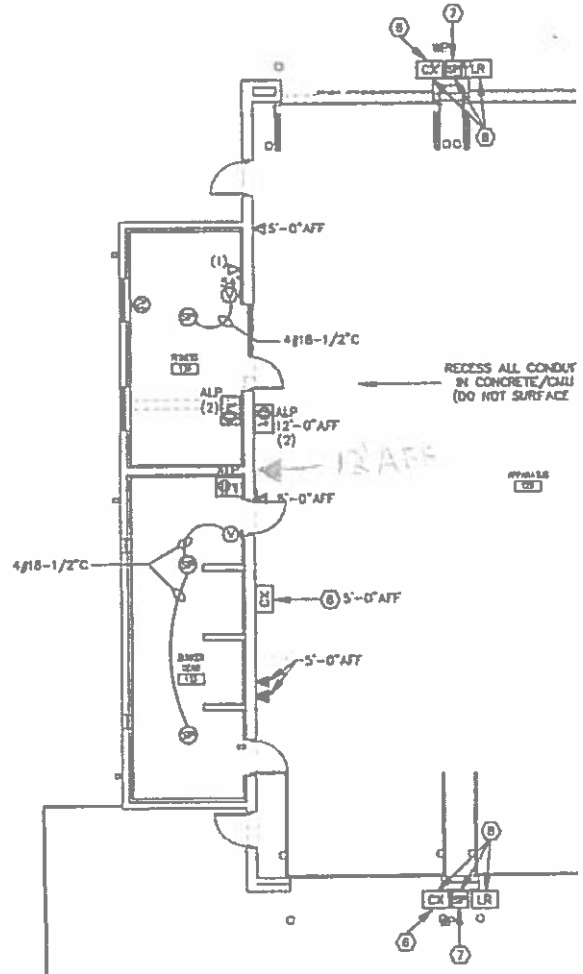

ELECTRICAL FLOOR PLAN- COMM SYS

SCALE: 1/8" = 1'-0"

Changed Scope:
- COJ to identify what rooms have trip lights ar
to be tied into the trip lights. The lighting plan i
- Delete LR (Loud Ringers) where indicated, ins
as specified by COJ/JFRD at exterior SP (Spea
Include volume control at typical switch height

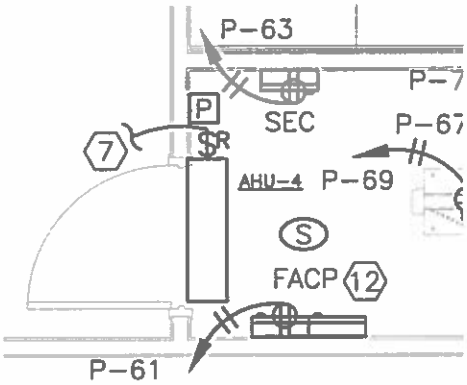

ENLARGED CC
SCALE: 1/4" = 1'-0"

(#) POWER PLAN NOTES:

1. REFER TO MECHANICAL DRAWINGS FOR EXACT LC EQUIPMENT. IF CONDENSATE PUMP(S) ARE REQU

2. SEE 'RESET GAS DIAGRAM' FOR COMPLETE REQU ROUGH-IN.

3. TIE TO LIGHTING IN THIS ROOM, SEE LIGHTING PL

4. FROM J-BOX PROVIDE 120V. CONNECTION TO HC REQUIREMENTS WITH HOOD SUPPLIER PRIOR TO I

LIGHTING FIXTURE SC

MARK	DESCRIPTION	MANUFACTURER	
A1	2X4 LED FLAT PANEL	LITHONIA–	CPANL 2X4 50LM 35K M2
A2	2X4 LED FLAT PANEL– HIGH OUTPUT		CPANL 2X4 60LM 35K M2
B1	2X2 LED FLAT PANEL– HIGH OUTPUT		CPANL 2X2 44LM 35K M2
C1	6" LED DOWNLIGHT– W/SHOWER LENS		EVO6 35/15 MD LSS MVOLT E
C2	6" LED DOWNLIGHT– W/WET LENS		LDN6 35/15 L06 AR LD MVOL
C3	6" LED CYLINDER LIGHT– WET		LDN6CYL 35/15 L06 AR LD MV
C4	6" LED CYLINDER LIGHT– WET	LUMINIS–	SQ510 L1L10 R30 120V (FINISH)
D/E	NOT USED		
F1	4FT LED WRAPAROUND	LITHONIA–	LBL4 4000LM 80 35 NODIM G
F2	NOT USED		
F3	2FT LED STRIP– VANITY	LITHONIA–	WL2 08L EZ1 LP835
F4	18" LED CLOSET LIGHT		FMMCL 18 840
F5	21" LED UNDERCABINET LIGHT		UCLD 18IN 30K 90CRI SWR WH
G1	LED WALL LIGHT AT DOOR		OLWX1 LED 13 50K
G2	LED AREA WALL LIGHT		DSXW1 10C 1000 40K TFTM M
L1	LED FLOOD LIGHT– WET		OLBF 8 50K DDB
P1	LED POLE MTD AREA LIGHT		DSX1 LED P1 40K TFTM MVOL
P2	LED POLE MTD AREA LIGHT– 2 HEADS		(2)DSX1 LED P1 40K TFTM MVO
S1	ROTATING BEACON LIGHT	SAFETY LIGHTS AND SIGNALS–	ST500P A
X1	LED EXIT SIGN	LITHONIA–	LQM S W 3 R MVOLT ELN SD
X2	LED EXIT SIGN– 2 FACES		LQM S W 3 R MVOLT ELN SD

AULD & WHITE
CONSTRUCTORS • LLC

Item No. 2

1/11/2022

Re: Fire Station No. 74 E-Town
AWC Project Number: 1733-

Mr. Daryl Weinstein
City of Jacksonville
214 North Hogan Street, 10th Floor
Jacksonville, FL 32202

Dear Mr. Weinstein:

Please accept this letter as our Proposed Change Order No. 8 for the following additional work:

The additional cost for items included in VIA's lessons learned document:

-Added data & power outlets in Chief's room
-Added data, telephone, & power in Fitness Room
-LED Light Kits added at overhead & four-fold doors in Apparatus Bay (6) EA
-Credit for Strobes tied into overhead doors

TOTAL AMOUNT OF THIS PROPOSED CHANGE NO. 8.....**$13,771.25**

Please indicate your approval and Owner's acceptance by signing in the space provided below and return one (1) copy for our files. Upon acceptance of same, we will prepare a Change Order for execution.

Sincerely,

Brett Nansen

Brett Nansen
Project Manager

c:

Attachments

ACCEPTED:

City of Jacksonville

BY: _____

DATE: _____

Change Order Request

Item No. 2

AULD & WHITE CONSTRUCTORS, LLC
4168 Southpoint Parkway, Suite 101
Jacksonville, FL 32216
Phone: 904-296-2555

Owner : City of Jacksonville
214 N. Hogan Street, 10th Floor
Jacksonville, FL 32202

Project: 1733- Fire Station No. 74 E-Town
11010 Meeting Street
Jacksonville, FL 32256

Change Order Request # : 8 - Lessons Learned Cost Impacts (Not Inc in Other PCO's)

Phase	Description	Cost Type	Est Units	Est HRs	UM	Est Unit Cost	Estimated Cost
08320.	OVERHEAD / FOUR-FOLDING DOORS	2 SUB	0.00	0.00	LS	0.00 $	9,480.00
16011.	ELECTRICAL SUBCONTRACT	2 SUB	0.00	0.00	LS	0.00 $	2,598.25

Bond	0.90%	130.00
Builders Risk	0.58%	75.00
General Liability Insurance	1.08%	138.00
Labor Burden	0.00%	0.00
Misc Tools & Equipment	12.00%	0.00
Overhead and Profit	0.00%	1,304.00
Polution Insurance	0.32%	46.00
Printing Costs	0.00%	0.00
Sales Tax	7.50%	0.00
	Total For Change Order	$13,771.25

Approved By: City of Jacksonville

Signed: _____

Date: _____

Submitted By: AULD & WHITE CONSTRUCTORS, LLC

Signed: _____

Date: _____

Item No. 2

MARDANT ELECTRICAL CONSTRUCTION CO. INC.

Mardant Electrical Construction Co.

CHANGE ORDER #14

Fire Station 74 (Etown Fire Station)
Etown Parkway, Jacksonville, Florida

12/15/2021

Brett Nansen
Auld & White Constructors, LLC

Provide and install conduit, wire and outlets for power and back boxes, data outlets and cabling for additional Data and power Outlets PER DRAWINGS E-102 & T-101

1.	ADDITIONAL POWER OUTLETS & DATA OUTLETS	$3,348.13

Material	$ 350.00
Sub-Contractor (NCS)	$ 900.00
Tax 7.5%	$ 93.75
Total	$ 1,343.75
Labor (20 manhours) 20 x $85.00	$ 1,700.00
Total	$ 3,043.75
10% P&O	$ 304.38
Grand Total	$ 3,348.13

Randy Mardant — *12-15-2021*

Subcontractor signature and title — Date

Contractor signature and title — Date

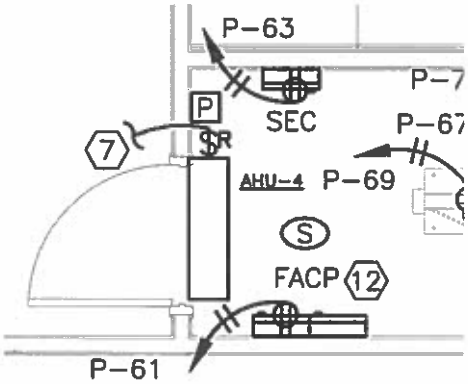

ENLARGED CC
SCALE: 1/4" = 1'-0"

(#) POWER PLAN NOTES:

1. REFER TO MECHANICAL DRAWINGS FOR EXACT L
EQUIPMENT. IF CONDENSATE PUMP(S) ARE REQU

2. SEE 'RESET GAS DIAGRAM' FOR COMPLETE REQU
ROUGH-IN.

3. TIE TO LIGHTING IN THIS ROOM, SEE LIGHTING P

4. FROM J-BOX PROVIDE 120V. CONNECTION TO H
REQUIREMENTS WITH HOOD SUPPLIER PRIOR TO

THE FOLLOWING LIST OF ITEMS IS NEEDED TO SUPPORT THE TELECOMMUNICATIONS ROOMS (TR) AND WORK ARE LOCATIONS IN THIS BUILDING AND AS THE PROJECT DEVELOPS.

1. NEW FIRE STATION 74 BUILDING TELECOMMUNICATIONS REQUIREMENTS

a. TR (TELECOMMUNICATIONS ROOM) IS A MINIMUM SIZE OF 8'X 4'.

b. TR WILL HAVE A QUANTITY OF 2– 19" FLOOR MOUNTED EQUIPMENT RACK, BLACK IN COLOR.

c. HVAC IN TRS SHALL STAY BETWEEN A TEMPERATURE RANGE OF 64 DEGREES TO 75 DEGREES FAHRENHEIT AND M POSITIVE PRESSURE WITH 3 AIR CHANGE PER HOUR, CONTINUOUS (24 HOURS A DAY AND 365 DAYS PER YEAR). SHALL MAINTAIN A 30%–50% RELATIVE HUMIDITY AND A HEAT DISSIPATION OF 50KW AN HOUR.

d. THE TRS WILL HAVE A MINIMUM OF 1 DEDICATED QUAD 120 VAC/15A/3 PHASE ELECTRICAL OUTLET AT THE BOT EACH NEW EQUIPMENT RACK. THE TR SHALL ALSO HAVE A MINIMUM OF 4 DEDICATED 120 VAC/20A ELECTRICAL C ON THE WALLS OF TR.

e. LIGHTING IN TR WILL BE A MINIMUM OF 50 FOOT CANDLES AT 3 FOOT AFF. TR LIGHT FIXTURES SHALL BE MOUN LESS THAT 8'6" AFF. EACH TR SHALL HAVE A MINIMUM OF 1 EMERGENCY LIGHT FIXTURE.

f. DOORS IN EACH TR SHALL BE A MINIMUM OF 36"W X 80"H HINGED TO OPEN OUTWARDS AND BE REMOVABLE. TH TO THE TR SHALL HAVE THE ABILITY TO LOCK ALSO WITH BADGE ACCESS.

g. EACH WA (WORK AREA) OUTLET FOR THE OFFICES SHALL HAVE A MINIMUM OF 1" EMT STUBBED ABOVE THE CEILI A PULL STRING INSTALLED WITH A BUSHING ON THE END OF THE CONDUIT. THE CONDUIT WILL BE CONNECTE 4"X4"X2 ¼" BOX IN THE WALL WITH A MUD RING ATTACHED. THIS BOX SHALL BE INSTALLED AT THE SAME HEIGHT ELECTRICAL OUTLETS OR IF NECESSARY, 18" AFF.

h. TBB (TELECOMMUNICATIONS BACKBOARD)(PATHWAYS & SPACES, PART# RB–AWALL–TRG), BACKBOARD, WHITE IN SHALL BE VERTICALLY HUNG ON ALL WALLS OF THE TR.

i. 2–4", PVC CONDUITS TO EXTEND FROM A MINIMUM OF 4" AFF IN NEW TR TO A QUAZITE, HH (HANDHOLE) 24"X PLACED AT PROPERTY LINE LABELED "COJ TELECOMM." ALL CONDUITS SHALL HAVE A QUANTITY OF 1, 3–CELL, M INNERDUCTS IN EACH.

j. CABLE TYPE WILL BE A CAT 6, PLENUM RATED, BELDEN 3613 SERIES "GRAY" IN COLOR.

k. CONNECTIVITY TYPE WILL BE BELDEN, "RED" IN COLOR, REV–CONNECT SERIES, CAT 6 JACKS. TERMINATION CONFIGU SHALL BE 568A.

l. CABLE SUPPORTS THRU THE CEILING WILL BE A J–HOOK TYPE.

m. THE TR WILL HAVE A QUANTITY OF 1 TMGB (TELECOMMUNICATIONS MAIN GROUNDING BUSBAR). THIS KIT WILL I MINIMUM OF 12"X4".25" COPPER, BUSBAR WITH INSULATORS. THE TMGB KIT WILL BE LOCATED IN THE TR WITH A SHEATHED, 2 AWG, STRANDED, COPPER GROUND WIRE GOING TO THE MAIN ELECTRICAL GROUND. GROUND WIRE T ELECTRICAL GROUND WILL BE IN NO LESS THAN 1/2" CONDUIT. CONDUIT SHALL BE BONDED ON BOTH SIDES. EACI WILL BE BONDED TO THE TMGB WITH A 2 AWG, STRANDED, COPPER GROUND WIRE.

n. EACH RACK SHALL HAVE A BELDEN, BHVHH03, 4", DOUBLE SIDED VERTICAL WIRE MANAGER ATTACHED TO EACH S RACK. "BLACK" IN COLOR.

o. PATCH PANEL WILL HAVE A BELDEN BHH192UCFR, 2U, WIRE MANAGER ABOVE AND BELOW THE PATCH PANELS, "BL COLOR.

p. PATCH PANELS WILL BE BELDEN, MODULAR, ANGLED LOADED WITH REV–CONNECT SERIES, CAT 6 JACKS. JACKS SH "RED" IN COLOR.

q. FACEPLATES WILL BE BELDEN, 4 PORT, 1 GANG PLATE, MEDAFLEX, ROUNDED EDGE, "ELECTRIC WHITE" IN COLOR.

r. A 25 PAIR, CAT 6, PLENUM RATED, VOICE BACKBONE CABLE SHALL RUN FROM THE 19" RACK TO THE AREA WEL DMARC SHALL BE PLACED. RACK SIDE SHALL TERMINATE ON A 24 PORT, BELDEN, MODULAR PATCH PANE BACKBOARD SIDE SHALL TERMINATE ON AT 100 PAIR, 110 TYPE BLOCK. C5 CLIPS SHALL BE USED ON 110 BLOCK.

s. TRIP LIGHT–THE SCU WILL PROVIDE A 12VDC OUTPUT TO TRIGGER THE LIGHTING RELAYS FOR 2 MINUTES DUR ACTIVE STATION ALERT. ALL RELAYS WILL TERMINATE IN THE COMMUNICATIONS CLOSET ON A 66 BLOCK OR E STRIP EITHER PARALLEL WIRED OR HOME RUN.

Item No. 2

MARDANT ELECTRICAL CONSTRUCTION CO. INC.

Mardant Electrical Construction Co.

DEDUCTIVE CHANGE ORDER #15

12/20/2021

Fire Station 74 (Etown Fire Station)
Etown Parkway, Jacksonville, Florida

Brett Nansen
Auld & White Constructors, LLC

DEDUCTIVE CHANGE ORDER OF COST
FOR 6 – S-1 STROBE FIXTURES.

1.	DEDUCT FOR 6 - SI TYPE STROBE FIXTURES.	$ 749.88

LIGHT FIXTURES ORIGINAL COST	$ 1,046.50
RE-STOCKING FEE	$ - 261.62
FREIGHT BACK	$ - 35.00
TOTAL DEDUCT FOR FIXTURES	$ 749.88

Grand Total for Deduction	$ 749.88

Randy Mardant *12-15-2021*

Subcontractor signature and title Date

Contractor signature and title Date

Lamp Sales Unlimited, Inc.
Always On.

Item No. 2

MARDANT ELECTRIC

FIRE STATION 74

Original Sell for TYPE S1 Fixtures: $1,046.50

25% Restock Fee: - $261.62

Freight Back to Vendor: -$35.00

Credit total: $749.88

American Roll-Up Door Co.

Item No. 2

QUOTATION

Q-370517.02

To: **Audi White**
4168 Southpoint Parkway
Jacksonville, FL

Attn: **Kenny**
Phone: 1-904-296-2555
Fax:

Email: awcestimating@auld-white.com

Issued: Tuesday, January 11, 2022
Expiration: Thursday, February 10, 2022
Sales Contact: Tim Keck
Direct: Cell: (919)-741-3778
Email: Tim.Keck@passportdoors.com

Reference: Jacksonville Fire Station #74 LED Red & Green Lights

Qty	Description	Price	Total

LED 10' Safety Strips Material & Freight

1 **DSK 10 LED Safety Kits**

Provide (6) each of the folloiwng:

Door Safety Kit for Commercial Door Operator:
* 10ft LED strip, 20ft harness wire
* Programmable Dual LED Controller (DSK)
*12V Power Supply
* 4ft 22-4 signal wire cable
* 10ft LED track (track flange options: single, dual, 90degre

ALL LOW AND HIGH VOLTAGE BY ELECTRICAN

Total Including Taxes: $6,810.00

Total Including Taxes: $6,810.00

LED 10' Safety Strips Labor

0 **DSK 10 LED Safety Kits**

Provide (6) each of the folloiwng:

Door Safety Kit for Commercial Door Operator:
* 10ft LED strip, 20ft harness wire
* Programmable Dual LED Controller (DSK)
*12V Power Supply
* 4ft 22-4 signal wire cable
* 10ft LED track (track flange options: single, dual, 90degre

ALL LOW AND HIGH VOLTAGE BY ELECTRICAN

Total Including Taxes: $2,670.00

American Roll-Up Door Co.

Item No. 2

QUOTATION

Q-370517.02

Qty	Description	Price	Total

Scope of Work

1) UNLOADING & STORAGE: All unloading and storage of equipment purchased is the responsibility of the purchaser unless otherwise specified

2) INSTALLATION: All prices for installation are based on the following:
a) Unless specifically stated otherwise, all installation will be performed by factory-trained non-union personnel. If union labor is required, additional charges will apply.
b) All wire, wiring, conduit, electrical hookup, control wiring, mounting of control panels and outside lights (if applicable) by others.
c) Prices are based on installation of equipment during normal business hours and a normal business week. If specified work is to be done on weekend, additional charges will apply.
d) Pricing is also based on all equipment being installed on same trip with driveway to be poured prior to start of installation. Additional charges will be added if additional trips are involved due to site conditions.
e) If installation involves removal of existing equipment, pricing does not provide for handling and disposing of existing equipment unless otherwise specified.
f) Preparation of site, removal of obstructions to accept equipment, cutting, patching, and painting is by others.

3) DOCK LEVELERS: Specific to dock levelers and their proper installation:
a) Installation of levelers excludes excavating, forming of pits, and pit steel. Pit forming can be provided and quoted as an option.
b) Installation pricing includes necessary materials, off loading into pre-formed pit, positioning, shimming, and welding in place for pit leveler only.
c) Box Leveler - Shimming and securing a box leveler in place is the responsibility of others. Installation refers to final adjustment only for this type of leveler.
d) If pit formation has been included, Just Rite Equipment, Southern Dock Products, and affiliates are not responsible for any sub-surface complications during pit excavation. Should unforeseen obstructions (conduit, water lines, wall thickness greater than 10", slab thickness greater than 6", etc.) be encountered, customer will be notified.
e) Unless otherwise noted, pit formation does not include a dust control enclosure around the dock during concrete cutting.

4) OVERHEAD DOORS: Specific to overhead doors and their proper installation:
a) Installation of overhead doors is based on an enclosed facility with a finished floor.
b) All interior mounting surfaces to flush and plumb.
c) Door frames, extensions and anchor plates for track, springs and / or electric operators are to be supplied and installed by others.
d) For operators, all electrical wiring, interconnections, and supply of primary power by others.

5) ELECTRICAL: Electrical install for power and controls by others. All wire, wiring, conduit, electrical hookup, control wiring, mounting of control panels and outside lights (if applicable) by others.

6) TAX: Tax excluded from proposals unless expressly provided.

For Standard Terms & Condtions of Sale please visit:
http://duraservcorp.com/terms/terms-and-conditions.pdf

Legal Entity name is Duraserv Corp
FEIN No. 46-4394239.
Address: 2200 Luna Rd, Ste 160, Carrollton, TX 75006.
All contract documents should be sent to contracts@duraservcorp.com.
All insurance requests should be directed to insurance@duraservcorp.com.

All prices quoted herein are subject to steel price increases from our suppliers. Increases may be applied to orders before the time of shipment in certain situations. Most suppliers have informed us of their intent to increase prices, but we have little definitive information at this point. Some suppliers have had their term buying contracts shortened or rescinded by steel mills and/or wholesalers, thus causing price uncertainty. We will try to keep you informed of any pending announcements or increases, and also try to mitigate these as best we can. Thanks for your business and understanding.

Accepted By: _____

Kenny - Audi White Date:

PO #: _____

Item No. 2

Dominic Ciacelli

From: Kenny Weiss <kweiss@auld-white.com>
Sent: Wednesday, January 12, 2022 11:31 AM
To: Dominic Ciacelli
Cc: Brett Nansen; Weinstein, Daryl
Subject: RE: 1733 - FS 74 - PCO's 008 & 016 For Approval

Dominic,

Below is a breakout for the change order:

-Mardant Material – Conduit, boxes, high voltage wire, & high voltage trim out
-Mardant Labor – Installation of the above
-NCS Material & Labor – Low voltage wire pulling & trim-out

Thanks,
Kenny

Kenny Weiss | Manager in Training
Auld & White Constructors, LLC | BUILDING YOUR FUTURE
p. 904.296.2555

From: Dominic Ciacelli <dciacelli@via-cs.com>
Sent: Wednesday, January 12, 2022 11:00 AM
To: Kenny Weiss <kweiss@auld-white.com>
Cc: Brett Nansen <bnansen@auld-white.com>; Weinstein, Daryl <DWeinstein@coj.net>
Subject: RE: 1733 - FS 74 - PCO's 008 & 016 For Approval

EXTERNAL EMAIL - EXERCISE CAUTION OPENING LINKS OR ATTACHMENTS

Kenny,
A couple more comments/ questions regarding PCO 8 and PCO 16:

For PCO 8, what is the $900 NCS Subcontractor cost for? No breakdown is given and labor/materials is already covered by Mardant.

AULD & WHITE
CONSTRUCTORS • LLC

Item No. 3

12/14/2021

Re: Fire Station No. 74 E-Town
AWC Project Number: 1733-

Mr. Daryl Weinstein
City of Jacksonville
214 North Hogan Street, 10th Floor
Jacksonville, FL 32202

Dear Mr. Weinstein:

Please accept this letter as our Proposed Change Order No. 10 for the following additional work:

The cost to install a cage around the split-system condenser that conditions the Fitness Room (130). All other condensers are inside the fenced area.

There is also the option to extend the fence to the North exterior corner of Fitness Room (130) for the total change order cost of $3,475. This option was not accepted.

TOTAL AMOUNT OF THIS PROPOSED CHANGE NO. 10.....**$1,478.29**

Please indicate your approval and Owner's acceptance by signing in the space provided below and return one (1) copy for our files. Upon acceptance of same, we will prepare a Change Order for execution.

Sincerely,

Brett Nansen

Brett Nansen
Project Manager

c:

Attachments

ACCEPTED:

City of Jacksonville

BY: _____

DATE: _____

Change Order Request

AULD & WHITE CONSTRUCTORS, LLC
4168 Southpoint Parkway, Suite 101
Jacksonville, FL 32216
Phone: 904-296-2555

Item No. 3

Owner : City of Jacksonville
214 N. Hogan Street, 10th Floor
Jacksonville, FL 32202

Project: 1733- Fire Station No. 74 E-Town
11010 Meeting Street
Jacksonville, FL 32256

Change Order Request # : 10 - Condenser Fencing Cages (Split System Condensors)

Phase	Description	Cost Type	Est Units	Est HRs	UM	Est Unit Cost	Estimated Cost
15500.	HVAC	2 SUB	0.00	0.00	LS	0.00 $	1,305.29

Bond	0.90%	13.00
Builders Risk	0.58%	8.00
General Liability Insurance	1.08%	14.00
Labor Burden	55.00%	0.00
Misc Tools & Equipment	12.00%	0.00
Overhead and Profit	10.00%	133.00
Polution Insurance	0.32%	5.00
Printing Costs	0.00%	0.00
Sales Tax	7.50%	0.00
	Total For Change Order	$1,478.29

Approved By: City of Jacksonville

Signed: _____

Date: _____

Submitted By: AULD & WHITE CONSTRUCTORS, LLC

Signed: _____

Date: _____

Item No. 3

Weather Engineers, Inc.

Air Conditioning • Heating • Refrigeration • Clean Air Professionals

TO:	Kenny Weiss	**DATE:**	12/14/2021
FROM:	David Macher		
PROJECT:	E-Town Firehouse		
REFERENCE:	Furnish & Install Condenser Cages		
CHANGE ORDER NUMBER:	PCO-003R1		

WE PROPOSE TO PROVIDE THE FOLLOWING MATERIALS AND LABOR

MATERIALS/SUBCONTRACTOR:	**QTY**	**COST**	**TOTAL COST**
Cage - 52"Wx32"Dx33"H	1		$ 625.00
Lock	1		$ 30.00
		7-1/2% TAX	$ 49.13
	TOTAL MATERIALS		$ 704.13

LABOR:	**HOURLY CREW RATE (2-MEN)**	**TOTAL HR.**	**COST PER UNIT**
Receive, deliver and install	$ 75.00	4	$ 300.00
	LABOR TOTAL		$ 300.00
	LABOR BURDEN 42%		$ 126.00
	BOND		

NOTES:		
	TOTAL MATERIALS	$ 704.13
	TOTAL LABOR	$ 426.00
	SUBTOTAL	$ 1,130.13
	OVERHEAD (10%)	$ 113.01
	SUBTOTAL	$ 1,243.14
	PROFIT (5%)	$ 62.16
	TOTAL PRICE FOR THIS CHANGE	$ 1,305.29

TIME INCREASE **YES** ☐ **NO** ☑

MATERIALS LEAD TIME:

LABOR :

NAME:		**TITLE:**	

CONTRACTOR BY SIGNING THIS PROPOSAL YOU ARE AUTHORIZING WEATHER ENGINEERS TO PROCEED WITH THIS WORK AND AGREEING TO PRICE AND TERMS STATED ABOVE.

WEATHER ENGINEERS AUTHORIZED SINGNITURE.

NAME:	David Macher	**TITLE:**	Project Manager

Item No. 3

From: Victoria Velasco
To: David Macher
Cc: info@propertyarmor.net
Subject: Re: Proposal Request
Date: Wednesday, November 24, 2021 2:36:27 PM
Attachments: image003.png

David,
Please see your pricing below. Keep in mind, if the cage exceeds 40" in width, you will need two locks per gate. I have quoted the option below since the provided width is greater than 40".

Qty 3 PRO Series P2 Cages 50 wide x 54 deep x 53 high with top access gate are 695.00 each, 2,085.00 for all three
Qty 2 PRO Series P2 Cages 52 wide x 32 deep x33 high with top access gate are 625.00 each, 1,250.00 for both
Qty 10 Master Lock Puck Locks Keyed Alike are 30.00 each, 300.00 for all 10
Qty 10 Protective Lock Covers are included at no charge

Estimated project cost is 3,635.00 plus tax. If you have a tax exemption, please make sure to forward the certificate at the time of order placement. Lead times are currently extended and will be determined at the time of order placement.

Thank you for the opportunity and we look forward to hearing from you.
-The Property Armor Team

Disclaimer- *Although we make every attempt to work alongside our customers to determine cage sizes, our input is limited because we are only working from pictures, verbal instruction, or unit specifications. There is no way for us to foresee potential obstructions such as electrical disconnects, fresh air hoods, curb configurations, ductwork, or where a pvc drain runs. After the collaboration process, it is ultimately the responsibility of the customer (you) to verify all proposed cage designs and dimensions for accuracy. Property Armor is not responsible for fitment issues where detailed CAD/SHOP drawings are not provided.*

Payment Terms- *Property Armor accepts all major credit cards and company checks. Checks must clear before product ships. All custom purchases require a 50% deposit before work begins and the remaining 50% balance paid in full prior to project shipping. Prices subject to change. Please contact us for details.*

Don't Be Exposed...Get Enclosed!™

RM Brands, Inc.
d/b/a **Property Armor**
2910-4 West Beaver Street
Jacksonville, FL 32254
855-858-5757 **Toll Free**
904-356-0092 **Main**
904-356-0093 **Fax**
www.PropertyArmor.net

PROPERTY ARMOR

PRO Series P2 Slammer

Item No. 3

on four sides

STD Puck Lock
els 1/2" RD

ound Line Set
orized Intrusion
A Concrete Pad
rusion Prevention

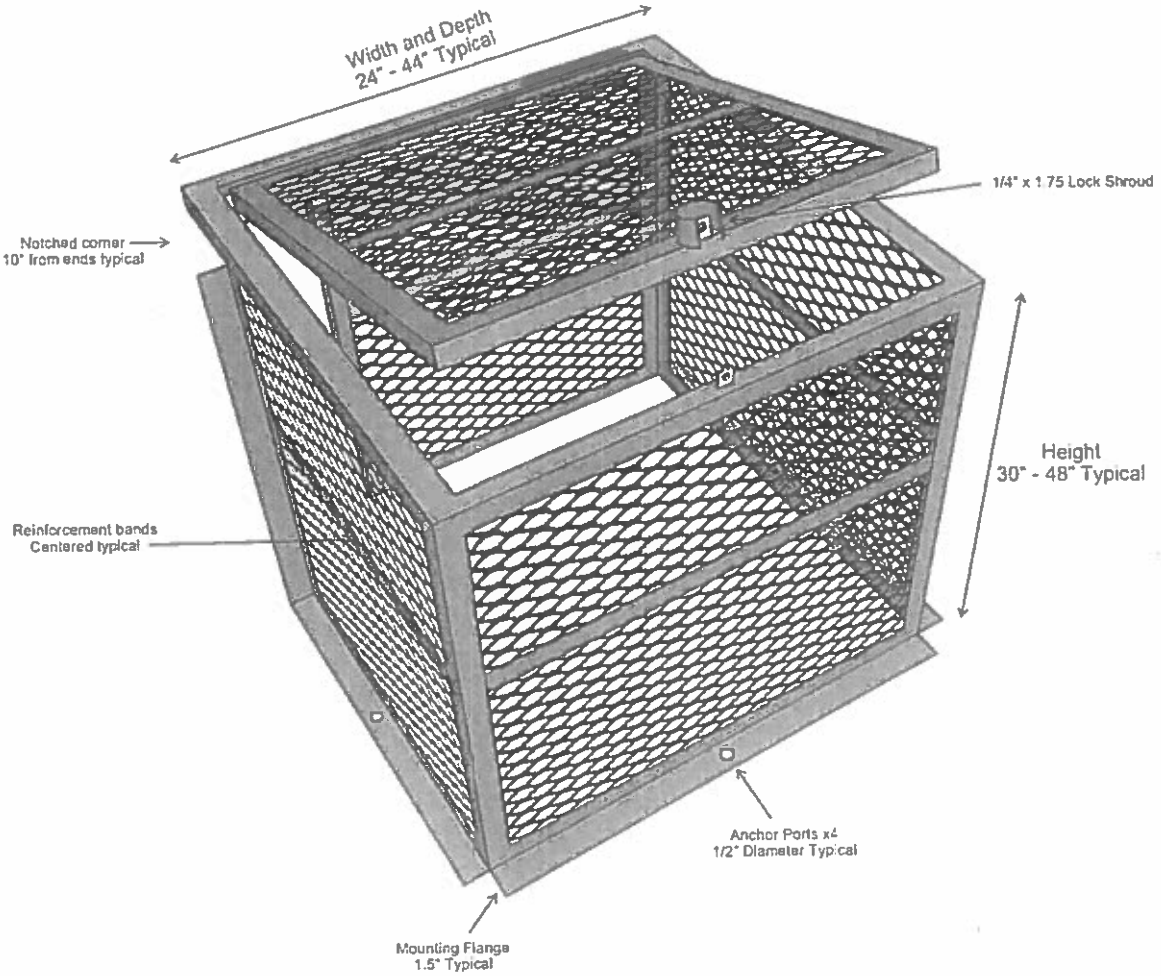

www.PropertyArmor.net Toll Free 855-858-5757

PROPERTY ARMOR 2910-4 WEST BEAVER STREET JACKSONVILLE, FL 32254 P 904-356-0092 F 904-356-0093

AULD & WHITE
CONSTRUCTORS • LLC

Item No. 4

12/14/2021

Re: Fire Station No. 74 E-Town
AWC Project Number: 1733-

Mr. Daryl Weinstein
City of Jacksonville
214 North Hogan Street, 10th Floor
Jacksonville, FL 32202

Dear Mr. Weinstein:

Please accept this letter as our Proposed Change Order No. 14 for the following additional work:

Change hardware to cipher lock at App Bay Storage [125] per Gary Daly's request.

TOTAL AMOUNT OF THIS PROPOSED CHANGE NO. 14.....**$984.00**

Please indicate your approval and Owner's acceptance by signing in the space provided below and return one (1) copy for our files. Upon acceptance of same, we will prepare a Change Order for execution.

Sincerely,

Brett Nansen

Brett Nansen
Project Manager

c:

Attachments

ACCEPTED:

City of Jacksonville

BY: _____

DATE: _____

Change Order Request

Item No. 4

AULD & WHITE CONSTRUCTORS, LLC
4168 Southpoint Parkway, Suite 101
Jacksonville, FL 32216
Phone: 904-296-2555

Owner : City of Jacksonville
214 N. Hogan Street, 10th Floor
Jacksonville, FL 32202

Project: 1733- Fire Station No. 74 E-Town
11010 Meeting Street
Jacksonville, FL 32256

Change Order Request # : 14 - Cipher Lock at Storage [125]

Phase	Description	Cost Type	Est Units	Est HRs	UM	Est Unit Cost	Estimated Cost
08110.	DOORS, FRAMES & HARDWARE MATERIA	2 SUB	0.00	0.00	LS	0.00 $	870.00

Bond	0.90%	9.00
Builders Risk	0.58%	5.00
General Liability Insurance	1.08%	9.00
Labor Burden	55.00%	0.00
Misc Tools & Equipment	12.00%	0.00
Overhead and Profit	10.00%	88.00
Polution Insurance	0.32%	3.00
Printing Costs	0.00%	0.00
Sales Tax	7.50%	0.00
	Total For Change Order	**$984.00**

Approved By: City of Jacksonville

Signed: _____

Date: _____

Submitted By: AULD & WHITE CONSTRUCTORS, LLC

Signed: _____

Date: _____

RAY WARE HARDWARE, INC.

4048 HERSCHEL STREET
JACKSONVILLE, FL 32205-9299
904-389-6659

Item No. 4

QUOTE

Number	047103
Date	12/14/2021
Page	1

Ship-to: SAME
FIRE STATION NO. 74 E TOWN
AULD & WHITE CONSTRUCTORS LLC
4168 SOUTHPOINT PARKWAY
SUITE 101
JACKSONVILLE, FL 32216

Bill-to: 1623-201
FIRE STATION NO. 74 E TOWN
AULD & WHITE CONSTRUCTORS LLC
4168 SOUTHPOINT PARKWAY
SUITE 101
JACKSONVILLE, FL 32216

Reference #	Slsp	Terms	Whse	Freight	Ship Via
CHANGE ORDER #2	JD	NET 30 DAYS	01	PRE/ADD	OT

Quoted By:	JD	Quoted To:		Effective:	NONE	Expires:	12/13/2022

Item	Description	Ordered	UM	Price	UM	Extension
	THE FOLLOWING SHOWS THE CREDIT TO DELETE HARDWARE FOR 115A & 120A					
HARDWARE	LUMP SUM PRICING	-1	EA	500.00	EA	-500.00
	LOCK FOR 125					
E5066 MWL 26D	SIMPLEX MORTISE LOCK	1	EA	870.00	EA	870.00

QUOTE

Merchandise	Misc	Tax	Freight	Total
370.00	.00	27.75	.00	397.75

ACCEPTED BY:_____

Customer Copy

... Last Page

AULD & WHITE
CONSTRUCTORS • LLC

Item No. 4

12/20/2021

Re: Fire Station No. 74 E-Town
AWC Project Number: 1733-

Mr. Daryl Weinstein
City of Jacksonville
214 North Hogan Street, 10th Floor
Jacksonville, FL 32202

Dear Mr. Weinstein:

Please accept this letter as our Proposed Change Order No. 15 for the following additional work:

Chief's Room Revisions to delete the Linen Closet and add a locker in it's place.

TOTAL AMOUNT OF THIS PROPOSED CHANGE NO. 15.....**$194.00**

Please indicate your approval and Owner's acceptance by signing in the space provided below and return one (1) copy for our files. Upon acceptance of same, we will prepare a Change Order for execution.

Sincerely,

Brett Nansen

Brett Nansen
Project Manager

c:

Attachments

ACCEPTED:

City of Jacksonville

BY: _____

DATE: _____

Change Order Request

Item No. 4

AULD & WHITE CONSTRUCTORS, LLC
4168 Southpoint Parkway, Suite 101
Jacksonville, FL 32216
Phone: 904-296-2555

Owner : City of Jacksonville
214 N. Hogan Street, 10th Floor
Jacksonville, FL 32202

Project: 1733- Fire Station No. 74 E-Town
11010 Meeting Street
Jacksonville, FL 32256

Change Order Request # : 15 - Chief's Room Revisions

Phase	Description	Cost Type	Est Units	Est HRs	UM	Est Unit Cost	Estimated Cost
06250.	MILLWORK	2 SUB	0.00	0.00	LS	0.00 $	-699.00
09155.	DRYWALL, FRAMING & ACOUSTICAL CEIL	2 SUB	0.00	0.00	LS	0.00 $	-295.00
10120.	TOILET & BATH ACCESSORIES	2 SUB	0.00	0.00	LS	0.00 $	1,044.00

Bond	0.00%	11.00
Builders Risk	0.00%	6.00
General Liability Insurance	0.00%	11.00
Labor Burden	55.00%	0.00
Misc Tools & Equipment	12.00%	0.00
Overhead and Profit	10.00%	107.00
Polution Insurance	0.00%	4.00
Printing Costs	0.50%	5.00
Sales Tax	7.50%	0.00
	Total For Change Order	**$194.00**

Approved By: City of Jacksonville

Signed: _____

Date: _____

Submitted By: AULD & WHITE CONSTRUCTORS, LLC

Signed: _____

Date: _____

Item No. 4

Holman, Inc.

PO BOX 60332
JACKSONVILLE, FL 32236

CHANGE ORDER REQUEST

Date: 12/14/2021

Change Order No. 22894

Project Name: 14525 Fire Station 74

Location:

Rep: SCOTT

Terms: Net 30

Order No.

To: AULD & WHITE CONSTRUCTORS, LLC
4168 SOUTHPOINT PARKWAY
SUITE 101
JACKSONVILLE, FL 32216

WE PROPOSE TO: Furnish ☐ Furnish/In... ☒ Install ☐ CBC1258919

Description	*Qty*	*Total*
1 ea. Additional Locker Install		900.00T 76.50

Subtotal	$976.50
Sales Tax (7.5%)	$67.50
Total	**$1,044.00**

Customer Signature: _____

Date: _____

Work for the above described items will not proceed until this request for change order has been fully executed by customer. Execution of this request for change order is considered authorization to proceed and acceptance of price and terms contained herein. Change Order Pricing is Valid for 30 Days.

Item No. 4

CGC #1510982
AWI & FSC Certified

Mitnet, LLC

Facility's Construction · FCC Cabinets

CHANGE ORDER PROPOSAL

14 December 2021

Attn: Estimator
Auld & White Co.

Re: Fire Station #74

Architect: Dasher Hurst, drawings dated 4/5/2021

We propose to fabricate and deliver the following standard plastic laminate millwork, based on our interpretation of the drawings provided by the above architect.

1. Removal of P-lam tall cabinet. A702: 1.

DEDUCT TOTAL----------<$699.00>

This quote is only for those items specifically listed above. Our quote is good for a period of **30 days.**

Avery Nichols
Estimator
Avery@fccfla.com

We Exclude:
Standing and running trim
Metals and plastics
Electrical and plumbing
Glass and glazing

Our quote is only for those items specifically listed above. Due to current material shortages and cost increase, our quote is good for thirty (30) days. We must receive a WRITTEN letter of intent, purchase order, or contract for this project prior to the end of the 30-day period. After the 30-day period, this quote will no longer be valid and must be re-quoted.

1030 Ellis Road North · Jacksonville, Florida 32254
Phone: 904-378-8536 · Fax: 904-378-8538
WWW.FCCFLA.COM

Tower Davis
Construction, LLC

Item No. 4

City of Jacksonville - Fire Stations #74

Etown Firestation

Change Order Request

COR #2: OD505

Delete Linen Closet in Chief's Room

Attention:
Brett Nansen
Auld & White Construction
4168 Southpoint Pkwy, Suite 101
Jacksonville, FL 32216

PROJECT: *Fire Station #74*
JOB NO. 702124
DATE: 12/14/2021
This information is valid for ten (10) calendar days from the date above.

Tower Davis Construction hereby submits a Change Order Request for the following changes in contract work:

The proposed credit includes:
Delete door frame installation and adjacent walls for doors 115A & 120A

Attachments:

SUB	ITEM	LABOR	MATERIAL	EQUIP	OTHER	SUB	TOTAL
	Delete walls and door frame installation	($175.00)	($100.00)				($275.00)
	Administrative costs (drawings/esitmating/fieldcoordination)	$75.00					~~$75.00~~
							$0.00
							$0.00
							$0.00
							$0.00
							$0.00
	SUBTOTAL	($100.00)	($100.00)	$0.00	$0.00	$0.00	($200.00)

Fee (10%) ($20.00)

TOTAL ($220.00)

($295.00)

[APP] COR STATUS (APP-Approved, PEN-Pending, EST-Estimated, VOID, TRACK-Tracking, or DIS-Disputed)

[ ] Schedule Impact - This change may impact the critical path.

[ ] We have proceeded with this change based on verbal approval from Owner.

[ ] As directed, we will not proceed with this change until formal direction from OWNER is received or this COR is signed below.

APPROVED BY:

Daniel Davis — Date 12/14/2021
Tower Davis Construction

Brett Nansen — Date
Auld & White Construction

Date

AULD & WHITE
CONSTRUCTORS • LLC

Item No. 5

1/11/2022

Re: Fire Station No. 74 E-Town
AWC Project Number: 1733-

Mr. Daryl Weinstein
City of Jacksonville
214 North Hogan Street, 10th Floor
Jacksonville, FL 32202

Dear Mr. Weinstein:

Please accept this letter as our Proposed Change Order No. 16 for the following additional work:

The cost to add liftmaster light curtains at the overhead sectional doors (3) EA.

TOTAL AMOUNT OF THIS PROPOSED CHANGE NO. 16.....**$4,851.00**

Please indicate your approval and Owner's acceptance by signing in the space provided below and return one (1) copy for our files. Upon acceptance of same, we will prepare a Change Order for execution.

Sincerely,

Brett Nansen

Brett Nansen
Project Manager

c:

Attachments

ACCEPTED:

City of Jacksonville

BY: _____

DATE: _____

Change Order Request

AULD & WHITE CONSTRUCTORS, LLC
4168 Southpoint Parkway, Suite 101
Jacksonville, FL 32216
Phone: 904-296-2555

Item No. 5

Owner : City of Jacksonville
214 N. Hogan Street, 10th Floor
Jacksonville, FL 32202

Project: 1733- Fire Station No. 74 E-Town
11010 Meeting Street
Jacksonville, FL 32256

Change Order Request # : 16 - Overhead Door Light Curtains

Phase	Description	Cost Type	Est Units	Est HRs	UM	Est Unit Cost	Estimated Cost
08320.	OVERHEAD / FOUR-FOLDING DOORS	2 SUB	0.00	0.00	LS	0.00 $	4,285.00

Bond	0.90%	43.00
Builders Risk	0.58%	25.00
General Liability Insurance	1.08%	46.00
Labor Burden	55.00%	0.00
Misc Tools & Equipment	12.00%	0.00
Overhead and Profit	10.00%	436.00
Polution Insurance	0.32%	16.00
Printing Costs	0.00%	0.00
Sales Tax	7.50%	0.00
Total For Change Order		$4,851.00

Approved By: City of Jacksonville

Signed: _____

Date: _____

Submitted By: AULD & WHITE CONSTRUCTORS, LLC

Signed: _____

Date: _____

American Roll-Up Door Co.

Item No. 5

QUOTATION

Q-374094.00

To: **Audi White**
4168 Southpoint Parkway
Jacksonville, FL

Attn: **Kenny**
Phone: 1-904-296-2555
Fax:

Email: awcestimating@auld-white.com

Issued: Monday, December 20, 2021
Expiration: Wednesday, January 19, 2022
Sales Contact: Tim Keck
Direct: Cell: (919)-741-3778
Email: Tim.Keck@passportdoors.com

Reference: Jacksonville Fire Station Liftmaster 36" LED Photo Eyes

Qty	Description	Price	Total

Liftmaster 36" Tall Light Curtains

3 **Liftmaster Light Curtain**

Provide (3) each of the folloiwng:

The Monitored Light Curtain is a primary safety entrapment protection device that is compliant with UL 325.

Provides up to 33 ft. of protection range and a minimum of 36 in. of height coverage to keep your customers, employees and equipment safe.

Eight LEDs per side and 22 cross-beams produce an invisible curtain of infrared light for maximum detection capability.
Easy alignment with visible LEDs to indicate correct sensor alignment and interrupt detection.

ALL LOW AND HIGH VOLTAGE BY ELECTRICAN

Total Including Taxes: $4,285.00

Total Including Taxes: $4,285.00

American Roll-Up Door Co.

Item No. 5

QUOTATION

Q-374094.00

Qty	Description	Price	Total

Scope of Work

1) UNLOADING & STORAGE: All unloading and storage of equipment purchased is the responsibility of the purchaser unless otherwise specified

2) INSTALLATION: All prices for installation are based on the following:
a) Unless specifically stated otherwise, all installation will be performed by factory-trained non-union personnel. If union labor is required, additional charges will apply.
b) All wire, wiring, conduit, electrical hookup, control wiring, mounting of control panels and outside lights (if applicable) by others.
c) Prices are based on installation of equipment during normal business hours and a normal business week. If specified work is to be done on weekend, additional charges will apply.
d) Pricing is also based on all equipment being installed on same trip with driveway to be poured prior to start of installation. Additional charges will be added if additional trips are involved due to site conditions.
e) If installation involves removal of existing equipment, pricing does not provide for handling and disposing of existing equipment unless otherwise specified.
f) Preparation of site, removal of obstructions to accept equipment, cutting, patching, and painting is by others.

3) DOCK LEVELERS: Specific to dock levelers and their proper installation:
a) Installation of levelers excludes excavating, forming of pits, and pit steel. Pit forming can be provided and quoted as an option.
b) Installation pricing includes necessary materials, off loading into pre-formed pit, positioning, shimming, and welding in place for pit leveler only.
c) Box Leveler - Shimming and securing a box leveler in place is the responsibility of others. Installation refers to final adjustment only for this type of leveler.
d) If pit formation has been included, Just Rite Equipment, Southern Dock Products, and affiliates are not responsible for any sub-surface complications during pit excavation. Should unforeseen obstructions (conduit, water lines, wall thickness greater than 10", slab thickness greater than 6", etc.) be encountered, customer will be notified.
e) Unless otherwise noted, pit formation does not include a dust control enclosure around the dock during concrete cutting.

4) OVERHEAD DOORS: Specific to overhead doors and their proper installation:
a) Installation of overhead doors is based on an enclosed facility with a finished floor.
b) All interior mounting surfaces to flush and plumb.
c) Door frames, extensions and anchor plates for track, springs and / or electric operators are to be supplied and installed by others.
d) For operators, all electrical wiring, interconnections, and supply of primary power by others.

5) ELECTRICAL: Electrical install for power and controls by others. All wire, wiring, conduit, electrical hookup, control wiring, mounting of control panels and outside lights (if applicable) by others.

6) TAX: Tax excluded from proposals unless expressly provided.

For Standard Terms & Condtions of Sale please visit:
http://duraservcorp.com/terms/terms-and-conditions.pdf

Legal Entity name is Duraserv Corp
FEIN No. 46-4394239.
Address: 2200 Luna Rd, Ste 160, Carrollton, TX 75006.
All contract documents should be sent to contracts@duraservcorp.com.
All insurance requests should be directed to insurance@duraservcorp.com.

All prices quoted herein are subject to steel price increases from our suppliers. Increases may be applied to orders before the time of shipment in certain situations. Most suppliers have informed us of their intent to increase prices, but we have little definitive information at this point. Some suppliers have had their term buying contracts shortened or rescinded by steel mills and/or wholesalers, thus causing price uncertainty. We will try to keep you informed of any pending announcements or increases, and also try to mitigate these as best we can. Thanks for your business and understanding.

Accepted By: _____

Kenny - Audi White

Date:

PO #: _____

AULD & WHITE
CONSTRUCTORS • LLC

1/26/2022

Item No. 6

Re: Fire Station No. 74 E-Town
AWC Project Number: 1733-

Mr. Daryl Weinstein
City of Jacksonville
214 North Hogan Street, 10th Floor
Jacksonville, FL 32202

Dear Mr. Weinstein:

Please accept this letter as our Proposed Change Order No. 17 for the following additional work:

The additional cost for the JEA transformer to be reloated across the driveway. This relocated caused additional secondary wire material and they added a conduit in the run of the primary conduit. JEA provides the wire material for the primary side of transformer which is why this relocation would not be net $0.

TOTAL AMOUNT OF THIS PROPOSED CHANGE NO. 17.....**$21,222.04**

Please indicate your approval and Owner's acceptance by signing in the space provided below and return one (1) copy for our files. Upon acceptance of same, we will prepare a Change Order for execution.

Sincerely,

Brett Nansen

Brett Nansen
Project Manager

c:

Attachments

ACCEPTED:

City of Jacksonville

BY: _____

DATE: _____

Change Order Request

Item No. 6

AULD & WHITE CONSTRUCTORS, LLC
4168 Southpoint Parkway, Suite 101
Jacksonville, FL 32216
Phone: 904-296-2555

Owner : City of Jacksonville
214 N. Hogan Street, 10th Floor
Jacksonville, FL 32202

Project: 1733- Fire Station No. 74 E-Town
11010 Meeting Street
Jacksonville, FL 32256

Change Order Request # : 17 - Revised Site Electric per JEA Approved Drawings

Phase	Description	Cost Type	Est Units	Est HRs	UM	Est Unit Cost	Estimated Cost
16011.	ELECTRICAL SUBCONTRACT	2 SUB	0.00	0.00	LS	0.00 $	18,748.04

Bond	0.90%	189.00
Builders Risk	0.58%	109.00
General Liability Insurance	1.08%	202.00
Labor Burden	55.00%	0.00
Misc Tools & Equipment	12.00%	0.00
Overhead and Profit	10.00%	1,906.00
Polution Insurance	0.32%	68.00
Printing Costs	0.00%	0.00
Sales Tax	7.50%	0.00
	Total For Change Order	$21,222.04

Approved By: City of Jacksonville

Signed: _____

Date: _____

Submitted By: AULD & WHITE CONSTRUCTORS, LLC

Signed: _____

Date: _____

Item No. 6

MARDANT ELECTRICAL CONSTRUCTION CO. INC.

Mardant Electrical Construction Co.

CHANGE ORDER #13

1/11/22

Fire Station 74 (Etown Fire Station)
Etown Parkway, Jacksonville, Florida

Brett Nansen
Auld & White Constructors, LLC

Extend (2) 4" PVC secondary conduits with 4 sets of 350 mcm copper wire from existing transformer location to NEW (approx. 80').

1.	Extend secondary electrical conduits and feeders	$ 18,748.04

Material	$ 9,529.00
Tax @ 7.5%	$ 714.67
Material Total	$ 10,243.67
Labor (80 manhours) 80 x $85.00	$ 6,800.00
Equipment Cost (Mini excavator) $275.00 daily x	$
Total material, equipment, and labor	$ 17,043.67
10% P&O	$_1,704.37
Grand Total	$ 18,748.04

Randy Mardant / president *1/11/22*

Subcontractor signature and title Date

Contractor signature and title Date

Item No. 6

#0021 JACKSONVILLE AFS
ANIXTER INC.
5875 HWY AVE
JACKSONVILLE FL 32254-3695
904-783-4567 Fax 904-783-9704

** Q U O T A T I O N **
SE43506849
P/O# :
09:58:19EST 01/28/22
Page # : 1 of 1

All sales are subject to Anixter Inc.'s Terms & Conditions of Sale found at https://www.anixter.com/en_us/resources/terms-of-sale.htm

Sold To: 27960
MARDANT ELECL CONST CO INC
8967 PHILLIPS HWY
JACKSONVILLE, FL 32256-1303
904-363-0200 Fax 904-363-0204

Ship To: 27960
MARDANT ELECL CONST CO INC
8967 PHILLIPS HWY
JACKSONVILLE, FL 32256-1303
904-363-0200 Fax 904-363-0204

Ordered By	Ship Via	Quote Date
		01/28/22
Writer	**Freight Terms/FOB**	**Expiration Date**
Sherri Dawson	No	02/07/22
Salesperson	**Terms**	**FOB**
Steve Todhunter	NET 10TH PROX 1.5% SC 25	

Special Instructions
****
*
*
****

Quantity	UM	Product Description	FD	Unit Price	UM	Net Amount
760	ft	WIRE THHN 350 BLK 37STR CU CTTG RL MSTR 1 @ 760 ft **STOCK IN ORLANDO		9923.028	m	7541.50
160	ft	PVC 4-IN-PVC-SCH40 CONDUIT 10FT		1006.278	c	1610.04

The impacts of COVID-19 cannot be reasonably determined at this time. This quote/proposal does not account for any potential adverse impacts COVID-19 may have on Anixter's performance or obligations herein. In the event of any delays or adverse impacts, Anixter reserves the right for an equitable adjustment of the delivery schedule and prices herein to offset the effects of COVID-19 delays, without fault or penalty of any kind.

Reprint .. Reprint | Total Weight 1152.3 lbs

THIS IS A QUOTATION

Prices are firm until 02/07/22, subject to change without notice after 02/07/22.

SALES TAX IS AN ESTIMATE!S&H IS AN ESTIMATE!

Subtotal	9151.54
S & H	0.00
Tax	624.09
Total Amount	9775.63

Item No. 6

Kenny Weiss

From: Kenny Weiss
Sent: Tuesday, January 25, 2022 3:39 PM
To: Kenny Weiss
Subject: FW: C/O FIRE STATION 74

Kenny Weiss | Manager in Training
Auld & White Constructors, LLC | BUILDING YOUR FUTURE
p. 904.296.2555

From: Randy Mardant <crmardant@mardantelectrical.com>
Sent: Wednesday, January 12, 2022 7:55 AM
To: Kenny Weiss <kweiss@auld-white.com>
Cc: Josh Scully <jscully@auld-white.com>; Brett Nansen <bnansen@auld-white.com>
Subject: RE: C/O FIRE STATION 74

EXTERNAL EMAIL - EXERCISE CAUTION OPENING LINKS OR ATTACHMENTS

Kenny,
Based on out conversation this morning, it will take 4 guy's to pull this wire in, we have 4 set's of 350 mcm copper in a 4" conduit @ 80' each, 2 guy's will be pulling off the reel and feeding into the conduit and 2- guy's pulling the wire on the rope out of the conduit, also included some time to receive and to set up and get ready to pull. The wire weigh's around a pound per foot so roughly 400lb per pull dead wight need several guy's to complete task with out tearing up things.
Hope this help's

Thank You,

Randy Mardant
President
Mardant Electrical Construction Company,Inc
8967 Philips Highway
Jacksonville, Florida 32256
Office # 904-363-0200
Cell # 904-759-0732
E-mail - crmardant@mardantelectrical.com
web site www.mardantelectrical.com

Mardant Electrical DAILY COMMITMENT:
**I WILL WORK SAFE;*
**I WILL BE PROUD OF THE QUALITY OF MY WORK;*
**I WILL BE RESPECTFUL OF THE TOOLS AND EQUIPMENT I USE;*
**I WILL BE PROFESSIONAL; AND*
**I WILL WORK AS A TEAM.*

Item No. 6

Dominic Ciacelli

From: Randy Mardant <crmardant@mardantelectrical.com>
Sent: Friday, January 28, 2022 10:14 AM
To: Kenny Weiss
Subject: BACK UP FOR C/O
Attachments: 202201280956.pdf

EXTERNAL EMAIL - EXERCISE CAUTION OPENING LINKS OR ATTACHMENTS

Kenny,
Will this due, the 468.00 difference is for miscellaneous materials like Glue, marking tape, pull-strings, ect. If you need back up on that I will, this is for major items

Thank You,

Randy Mardant
President
Mardant Electrical Construction Company,Inc
8967 Philips Highway
Jacksonville, Florida 32256
Office # 904-363-0200
Cell # 904-759-0732
E-mail - crmardant@mardantelectrical.com
web site www.mardantelectrical.com

Mardant Electrical DAILY COMMITMENT:
•I WILL WORK SAFE;
•I WILL BE PROUD OF THE QUALITY OF MY WORK;
•I WILL BE RESPECTFUL OF THE TOOLS AND EQUIPMENT I USE;
•I WILL BE PROFESSIONAL; AND
•I WILL WORK AS A TEAM.

Item No. 6

Dominic Ciacelli

From: Kenny Weiss <kweiss@auld-white.com>
Sent: Tuesday, February 1, 2022 11:14 AM
To: Dominic Ciacelli
Cc: Brett Nansen; Weinstein, Daryl
Subject: RE: 1733 - FS 74 - PCO No. 17 Revised Electrical Site Plan Per JEA Comments
Attachments: 202201280956.pdf

Dominic,

Please see attached.

The total material cost in the change order is $10,243.67 (including tax). The remaining $468 difference from the back-up attached is for misc. materials like glue, marking tape, pull-strings, etc.

Thanks,
Kenny

Kenny Weiss | Manager in Training
Auld & White Constructors, LLC | BUILDING YOUR FUTURE
p. 904.296.2555

From: Dominic Ciacelli <dciacelli@via-cs.com>
Sent: Thursday, January 27, 2022 4:21 PM
To: Kenny Weiss <kweiss@auld-white.com>
Cc: Brett Nansen <bnansen@auld-white.com>; Weinstein, Daryl <DWeinstein@coj.net>
Subject: RE: 1733 - FS 74 - PCO No. 17 Revised Electrical Site Plan Per JEA Comments

EXTERNAL EMAIL - EXERCISE CAUTION OPENING LINKS OR ATTACHMENTS

Kenny,
After review, please provide the back up for the $9,529.00 in material costs. Let me know if you have any questions.
Thanks

Dominic Ciacelli, P.E.
Asst. Project Administrator
VIA Consulting Services, Inc. (DBE)
10250 Normandy Blvd., Suite 304
Jacksonville, Florida 32221
(904)783-9842 (Office)
(904)619-9617 (Fax)
(407)687-7080 (Mobile)
http://www.via-cs.com
http://www.facebook.com/VIAcsinc

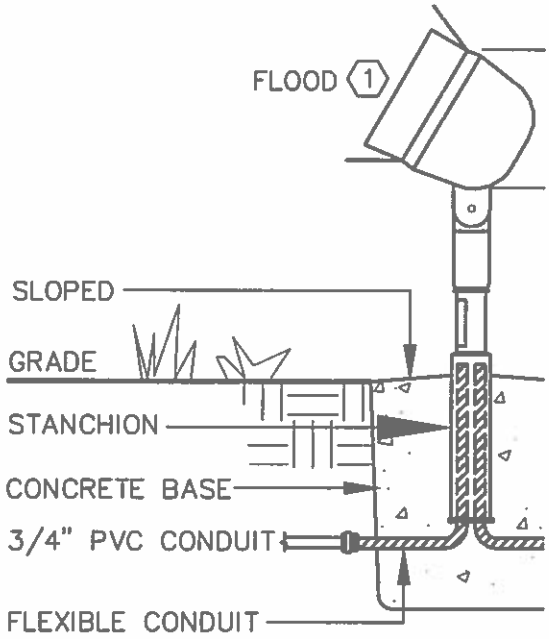

FLOOD UPLIGH

NO SCALE

DETAIL NOTES:

1. ALL LANDSCAPE LIGHTING SHALL BI
   LOCATED BY OWNER PRIOR TO TO
2. FIELD VERIFY CONDITIONS (CONCRE
   PROVIDE FIXTURE WITH REQUIRED P

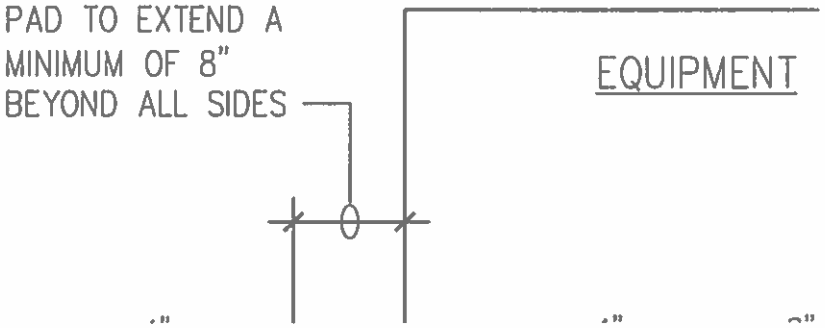

⚠ WA

MAXIMUM AVAILAE
65K SYMMETRICAL
DATE: --/--/-

ELECTRIC

NOTES:
1. PLACKARD
   AND CONF
2. INSTALL P

PANEL-L

SU
T

	SERVING	AWG SIZE	KVA LOAD	A
5	LTS-EXTERIOR SITE	10	0.8	
5	EXTERIOR BLDG	12	0.4	
	GYM/GEAR	12	0.3	
	TOILET/LOCKER	12	0.7	
	ENTRY/DISPATCH	12	0.7	
	SPARE			

FLOOD (1)

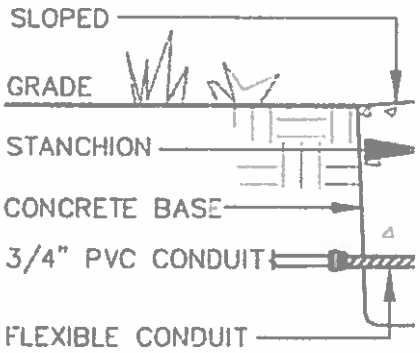

FLOOD UP

NC

(#) DETAIL NOTES:

1. ALL LANDSCAPE LIGHTING S
   LOCATED BY OWNER PRIOR
2. FIELD VERIFY CONDITIONS (
   PROVIDE FIXTURE WITH REC

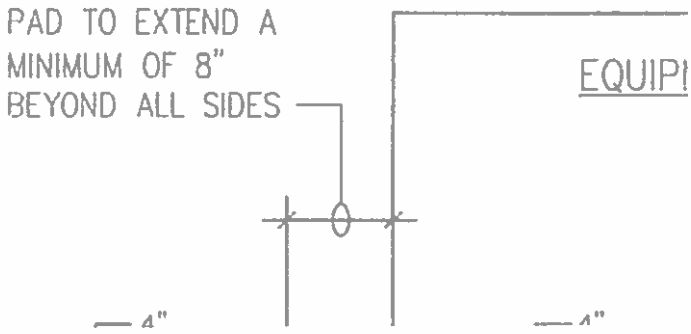

MAXIMUM A
65K SYMME
DATE: --/

ELEC

NOTE
1. PL
AN
2. IN

PANEL—L

	SERVING	AW SIZ
(5)	LTS—EXTERIOR SITE	10
(5)	EXTERIOR BLDG	12
	GYM/GEAR	12
	TOILET/LOCKER	12
	ENTRY/DISPATCH	12
SPARE		

AULD & WHITE
CONSTRUCTORS • LLC

1/26/2022

Item No. 7

Re: Fire Station No. 74 E-Town
AWC Project Number: 1733-

Mr. Daryl Weinstein
City of Jacksonville
214 North Hogan Street, 10th Floor
Jacksonville, FL 32202

Dear Mr. Weinstein:

Please accept this letter as our Proposed Change Order No. 18 for the following additional work:

The additive cost to provide and install solid surface countertops at all restroom countertops ILO p-lam countertops. This includes Wash (116), Restroom (121), and Chief Toilet (113).

TOTAL AMOUNT OF THIS PROPOSED CHANGE NO. 18.....**$3,293.00**

Please indicate your approval and Owner's acceptance by signing in the space provided below and return one (1) copy for our files. Upon acceptance of same, we will prepare a Change Order for execution.

Sincerely,

Brett Nansen

Brett Nansen
Project Manager

c:

Attachments

ACCEPTED:

City of Jacksonville

BY: _____

DATE: _____

Change Order Request

Item No. 7

AULD & WHITE CONSTRUCTORS, LLC
4168 Southpoint Parkway, Suite 101
Jacksonville, FL 32216
Phone: 904-296-2555

Owner : City of Jacksonville
214 N. Hogan Street, 10th Floor
Jacksonville, FL 32202

Project: 1733- Fire Station No. 74 E-Town
11010 Meeting Street
Jacksonville, FL 32256

Change Order Request # : 18 - Solid Surface Countertops

Phase	Description	Cost Type	Est Units	Est HRs	UM	Est Unit Cost	Estimated Cost
06250.	MILLWORK	2 SUB	0.00	0.00	LS	0.00 $	2,909.00

Bond	0.90%	29.00
Builders Risk	0.58%	17.00
General Liability Insurance	1.08%	31.00
Labor Burden	55.00%	0.00
Misc Tools & Equipment	12.00%	0.00
Overhead and Profit	10.00%	296.00
Polution Insurance	0.32%	11.00
Printing Costs	0.00%	0.00
Sales Tax	7.50%	0.00
	Total For Change Order	**$3,293.00**

Approved By: City of Jacksonville

Signed: _____

Date: _____

Submitted By: AULD & WHITE CONSTRUCTORS, LLC

Signed: _____

Date: _____

Item No. 7

FCC CABINETS

A DIVISION OF MITNET, LLC

PROPOSAL

19 January 2022

Attn: Estimator
Auld & White Co.

Re: Fire Station #74

Architect: Dasher Hurst, drawings dated 4/5/2021.

We propose to fabricate and deliver the following standard plastic laminate millwork, based on our interpretation of the drawings provided by the above architect.

Add

1. Replacement of all bathroom p-lam countertops in lieu of Solid Surface countertops.

ADD TOTAL----------$3,717.00

Deduct

1. Removal of all bathroom p-lam countertops.

DEDUCT TOTAL---------- <$808.00>

Difference

DIFFERENCE TOTAL----------$2,909.00

This quote is only for those items specifically listed above. Our quote is good for a period of **30 days.**

Note: Total of 18 linear feet of countertop being replaced.

Our quote is only for those items specifically listed above. Due to current material shortages and cost increase, our quote is good for thirty (30) days. We must receive a WRITTEN letter of intent, purchase order, or contract for this project prior to the end of the 30-day period. After the 30-day period, this quote will no longer be valid and must be re-quoted.

1030 Ellis Road North · Jacksonville, Florida 32254
Phone: 904-378-8536 · Fax: 904-378-8538
WWW.FCCFLA.COM

CERTIFIED QUALITY WOODWORK

Item No. 7

FCC
CABINETS
A DIVISION OF MITNET, LLC

Avery Nichols
Estimator
Avery@fccfla.com

We Exclude:
Standing and running trim
Metals and plastics
Electrical and plumbing
Glass and glazing

Our quote is only for those items specifically listed above. Due to current material shortages and cost increase, our quote is good for thirty (30) days. We must receive a WRITTEN letter of intent, purchase order, or contract for this project prior to the end of the 30-day period. After the 30-day period, this quote will no longer be valid and must be re-quoted.

1030 Ellis Road North · Jacksonville, Florida 32254
Phone: 904-378-8536 · Fax: 904-378-8538
WWW.FCCFLA.COM

CERTIFIED QUALITY WOODWORK

AULD & WHITE
CONSTRUCTORS • LLC

1/25/2022

Item No. 8

Re: Fire Station No. 74 E-Town
AWC Project Number: 1733-

Mr. Daryl Weinstein
City of Jacksonville
214 North Hogan Street, 10th Floor
Jacksonville, FL 32202

Dear Mr. Weinstein:

Please accept this letter as our Proposed Change Order No. 20 for the following additional work:

The cost to delete door locations 115A & 120A per JFRD request and OD 502 attached.

TOTAL AMOUNT OF THIS PROPOSED CHANGE NO. 20.....**$-1,023.00**

Please indicate your approval and Owner's acceptance by signing in the space provided below and return one (1) copy for our files. Upon acceptance of same, we will prepare a Change Order for execution.

Sincerely,

Brett Nansen

Brett Nansen
Project Manager

c:

Attachments.

ACCEPTED:

City of Jacksonville

BY: _____

DATE: _____

Change Order Request

Item No. 8

AULD & WHITE CONSTRUCTORS, LLC
4168 Southpoint Parkway, Suite 101
Jacksonville, FL 32216
Phone: 904-296-2555

Owner : City of Jacksonville
214 N. Hogan Street, 10th Floor
Jacksonville, FL 32202

Project: 1733- Fire Station No. 74 E-Town
11010 Meeting Street
Jacksonville, FL 32256

Change Order Request # : 20 - Delete Doors 115A & 120A

Phase	Description	Cost Type	Est Units	Est HRs	UM	Est Unit Cost	Estimated Cost
08110.	DOORS, FRAMES & HARDWARE MATERIA	1 MAT	0.00	0.00	LS	0.00 $	-500.00
09155.	DRYWALL, FRAMING & ACOUSTICAL CEIL	2 SUB	0.00	0.00	LS	0.00 $	-523.00

Bond	0.00%	0.00
Builders Risk	0.00%	0.00
General Liability Insurance	0.00%	0.00
Labor Burden	0.00%	0.00
Misc Tools & Equipment	0.00%	0.00
Overhead and Profit	0.00%	0.00
Polution Insurance	0.00%	0.00
Printing Costs	0.00%	0.00
Sales Tax	0.00%	0.00
	Total For Change Order	**($1,023.00)**

Approved By: City of Jacksonville

Signed: _____

Date: _____

Submitted By: AULD & WHITE CONSTRUCTORS, LLC

Signed: _____

Date: _____

RAY WARE HARDWARE, INC.

4048 HERSCHEL STREET
JACKSONVILLE, FL 32205-9299
904-389-6659

Item No. 8

QUOTE

Number	047103
Date	12/14/2021
Page	1

Ship-to: SAME
FIRE STATION NO. 74 E TOWN
AULD & WHITE CONSTRUCTORS LLC
4168 SOUTHPOINT PARKWAY
SUITE 101
JACKSONVILLE, FL 32216

Bill-to: 1623-201
FIRE STATION NO. 74 E TOWN
AULD & WHITE CONSTRUCTORS LLC
4168 SOUTHPOINT PARKWAY
SUITE 101
JACKSONVILLE, FL 32216

Reference #	Slsp	Terms	Whse	Freight	Ship Via
CHANGE ORDER #2	JD	NET 30 DAYS	01	PRE/ADD	OT

Quoted By:	JD	Quoted To:		Effective:	NONE	Expires:	12/13/2022

Item	Description	Ordered	UM	Price	UM	Extension
HARDWARE	THE FOLLOWING SHOWS THE CREDIT TO DELETE HARDWARE FOR 115A & 120A LUMP SUM PRICING	-1	EA	500.00	EA	-500.00
	~~LOCK FOR 125~~					
E5066 MWL 26D	SIMPLEX MORTISE LOCK	1	EA	870.00	EA	870.00

QUOTE

Merchandise	Misc	Tax	Freight	Total
370.00	.00	27.75	.00	397.75

ACCEPTED BY: _____

Customer Copy

... Last Page

Tower Davis Construction, LLC

City of Jacksonville - Fire Stations #74

Etown Firestation

Change Order Request

COR #1: OD502/RFI No. 27

Delete Doors 115A & 120A

Item No. 8

Attention:
Brett Nansen
Auld & White Construction
4168 Southpoint Pkwy, Suite 101
Jacksonville, FL 32216

PROJECT: *Fire Station #74*
JOB NO. 702124
DATE: 12/14/2021

This information is valid for ten (10) calendar days from the date above.

Tower Davis Construction hereby submits a Change Order Request for the following changes in contract work:

The proposed credit includes:
Delete door frame installation and adjacent walls for doors 115A & 120A

Attachments:

SUB	ITEM	LABOR	MATERIAL	EQUIP	OTHER	SUB	TOTAL
	Delete walls and door frame installation	($350.00)	($200.00)				($550.00)
	Administrative costs (drawings/esitmating/fieldcoordination)	$75.00					$75.00
							$0.00
							$0.00
							$0.00
							$0.00
							$0.00
	SUBTOTAL	($275.00)	($200.00)	$0.00	$0.00	$0.00	($475.00)

Fee (10%) ($48.00)

TOTAL ($523.00)

APP — COR STATUS (APP-Approved, PEN-Pending, EST-Estimated, VOID, TRACK-Tracking, or DIS-Disputed)

☐ Schedule Impact - This change may impact the critical path.

☐ We have proceeded with this change based on verbal approval from Owner.

☐ As directed, we will not proceed with this change until formal direction from OWNER is received or this COR is signed below.

APPROVED BY:

Daniel Daivs — Date 12/14/2021
Tower Davis Construction

Brett Nansen — Date
Auld & White Construction

Date

11/12/21
Other Doc. No. 502
AWC Project 1733

Item No. 8

AULD & WHITE CONSTRUCTORS, LLC

REQUEST FOR INFORMATION

TO: Amit Vaswani
Dasher Hurst Architects, P.A.
1022 Park Street, Suite 309
Jacksonville, FL 32204
AVaswani@dasherhurst.com

RFI#: 027
Priority: Normal

PROJECT: Fire Station No. 74 E-Town
AWC Project Number: 1733-

DATE: 11/10/2021

DATE INFORMATION REQUIRED: **11/15/2021**

Category:
- ____ Information Not Shown On Contract Documents
- ____ Interpretation Of Contract Documents
- ____ Conflict In Contract Requirements
- ____ Coordination Issue

Reference:
- Contract Drawing Ref: ____
- Submittal Ref: ____
- Specification Ref: ____
- Other: ____

Subject: Door 115A & 120A Deletion

Information Requested:
From the previous meeting with COJ and JFRD, they do not want doors 115A and 120A. We will proceed with collecting all applicable credits & adds. This RFI is for your records, no response is required. We will request a future ASI.

Contractor Suggestion:

Reply:
Per our email conversations, COJ and JFRD want the doors and associated walls removed so the opening will be the full width of the corridor. The Floor plan sheet A101 and Door Schedule A602 has been updated to reflect the changes.

- Amit Vaswani, Dasher Hurst Architect, 11/12/2021

Pending Your Reply We Are Proceeding As Follows:
Awaiting your direction.

By: Kenny Weiss
Kenny Weiss, Manager in Training

Cc: Mr. Brett Nansen, Auld & White Constructors, LLC
Mr. Kenny Weiss, Auld & White Constructors, LLC
Jay Zhao, Dasher Hurst Architects, P.A.

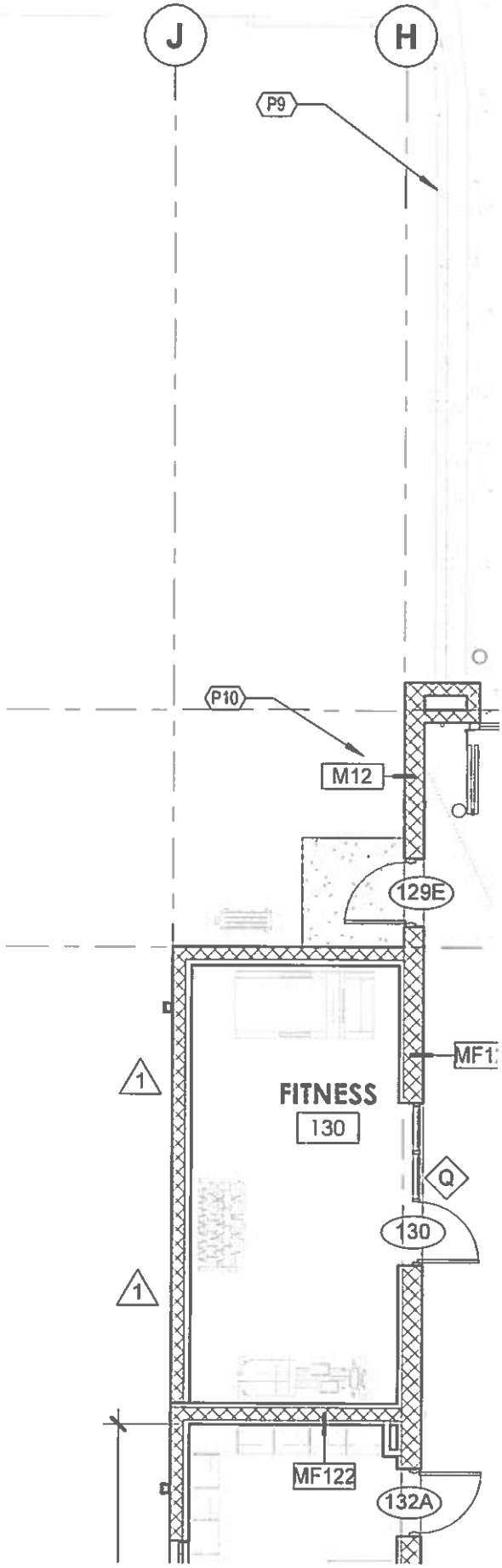
J
H
P9
P10
M12
129E
MF1
1
FITNESS
130
Q
130
1
MF122
132A

SUBJECT: RFQ- FOR DESIGN-BUILD SERVICES FOR VERTICAL/ARCHITECTURAL PROJECTS

BID #: CDB-0007-16

OPEN DATE: 2015-10-21

COMPETITIVE SEALED PROPOSAL EVALUATION COMMITTEE

KIND AND BASIS OF CONTRACT: CONSTRUCTION- DESIGN/BUILD

AGENCY: PUBLIC WORKS

BASIS OF AWARD: QUALIFICATIONS BASED

NUMBER OF BIDS INVITED: 4 NUMBER RECEIVED: 9 OTHER: 1

SUMMARY OF BIDS AND RECOMMENDED ACTIONS:

Recommend approval to extend the award with Auld & White Constructors, LLC, for three (3) months from January 13, 2022 through April 12, 2022 to allow the new bid to be awarded, and to increase the amount by $1,500,000.00. Revised guaranteed maximum price not-to-exceed amount will be $2,438,657.00. Total contracted amount is currently $34,500,000.00

This award will be encumbered by various accounts and executed by contract amendment through the Office of General Counsel.

ATTACHMENTS: Recommendation Memo, Vendor Letter and Previous Awards

ANALYST: Annette Burney

RESPECTFULLY SUBMITTED: GREGORY PEASE, CHIEF PROCUREMENT DIVISION

CONCURRENCE BY: Robin G. Smith, P.E., Chief, Engineering and Construction Management

(ALL AWARD ACTIONS SUBJECT TO LAWFULLY APPROPRIATED FUNDS)

ACTION OF CSPEC COMMITTEE ON RECOMMENDATIONS ABOVE

MEMBERS APPROVING 5 MEMBERS DISAPPROVING 0 DATE: 1/6/2022

OTHER:

ACTION OF AWARDING AUTHORITY DATE 1-10-22

APPROVED ✓ DISAPPROVED

OTHER

SIGNATURE OF AUTHENTICATION

Brian Hughes
~~Chief Administrative Officer~~
For: Mayor Lenny Curry
Under Authority of
Executive Order No. 2019-02

SUBJECT: RFQ- FOR DESIGN-BUILD SERVICES FOR VERTICAL/ARCHITECTURAL PROJECTS

BID #: CDB-0007-16

OPEN DATE: 2015-10-21

COMPETITIVE SEALED PROPOSAL EVALUATION COMMITTEE

KIND AND BASIS OF CONTRACT: CONSTRUCTION- DESIGN/BUILD

AGENCY: PUBLIC WORKS

BASIS OF AWARD: QUALIFICATIONS BASED

NUMBER OF BIDS INVITED: 4 NUMBER RECEIVED: 9 OTHER: 1

SUMMARY OF BIDS AND RECOMMENDED ACTIONS:
Recommend approval to amend the award with Auld & White Constructors, LLC for repairs at Fire Station 74 (Amendment 13B), and to increase the amount by $25,762.00. Revised guaranteed maximum price not-to-exceed amount will be $4,125,762.00. Total revised estimated expenditure amount is $33,025,762.00; total amount spent to date is $22,391,448.14.

This amendment is to be funded by account 32111.127001.565051.010102.00000000.00000.00000000 and to be executed by contract amendment through Office of General Counsel.

ATTACHMENTS: Recommendation Memo and Previous Awards

ANALYST: ANNETTE BURNEY

RESPECTFULLY SUBMITTED: GREGORY PEASE, CHIEF PROCUREMENT DIVISION

CONCURRENCE BY: Robin G. Smith, P.E., Chief, Engineering and Construction Management

(ALL AWARD ACTIONS SUBJECT TO LAWFULLY APPROPRIATED FUNDS)
ACTION OF CSPEC COMMITTEE ON RECOMMENDATIONS ABOVE

MEMBERS APPROVING 5 MEMBERS DISAPPROVING 0 DATE 12/16/21

OTHER:

Teresa Reiber

ACTION OF AWARDING AUTHORITY DATE 12-16-21

APPROVED ✓ DISAPPROVED

OTHER

SIGNATURE OF AUTHENTICATION

Brian Hughes
Chief Administrative Officer
For: Mayor Lenny Curry
Under Authority of
Executive Order No: 2019-02

SUBJECT: RFQ- FOR DESIGN-BUILD SERVICES FOR VERTICAL/ARCHITECTURAL PROJECTS

BID #: CDB-0007-16

OPEN DATE: 2015-10-21

COMPETITIVE SEALED PROPOSAL EVALUATION COMMITTEE

KIND AND BASIS OF CONTRACT: CONSTRUCTION- DESIGN/BUILD

AGENCY: PUBLIC WORKS

BASIS OF AWARD: QUALIFICATIONS BASED

NUMBER OF BIDS INVITED: 4 NUMBER RECEIVED: 9 OTHER: 1

SUMMARY OF BIDS AND RECOMMENDED ACTIONS:
The Fire Station #4 Addition project was awarded to Auld & White Constructors, LLC, on May 6, 2021 for Contract 9182-03 in the amount of $749,600.00. On November 1, 2021 Amendment 12B was awarded to Auld & White Constructors, LLC, in the amount of $323,665.00.

Recommend approval of amendment 12C to Auld & White Constructors, LLC in the amount of $9,919.58 for modifications to the electrical panel. Revised guaranteed maximum price not-to-exceed amount will be $1,083,184.58. Total contracted amount is currently at $33,000,000.00; total amount spent to date is $22,365,686.14.

This amendment is to be funded by account 004308.565051.1.32111.384020 and to be executed by contract amendment through Office of General Counsel.

ATTACHMENTS: Recommendation Memo, Exhibit N-3, Previous Award(s)

ANALYST: BRYAN MATUS

RESPECTFULLY SUBMITTED: GREGORY PEASE, CHIEF PROCUREMENT DIVISION

CONCURRENCE BY: Robin G. Smith, P.E., Chief, Engineering and Construction Management

(ALL AWARD ACTIONS SUBJECT TO LAWFULLY APPROPRIATED FUNDS)
ACTION OF CSPEC COMMITTEE ON RECOMMENDATIONS ABOVE

MEMBERS APPROVING 5 MEMBERS DISAPPROVING 0 DATE 12/2/21

OTHER

ACTION OF AWARDING AUTHORITY

DATE 12-3-21

APPROVED ✓ DISAPPROVED

OTHER

SIGNATURE OF AUTHENTICATION

Brian Hughes
Chief Administrative Officer
For Mayor Lenny Curry
Under Authority of
Executive Order No: 2019-02

SUBJECT: RFQ- FOR DESIGN-BUILD SERVICES FOR VERTICAL/ARCHITECTURAL PROJECTS

BID #: CDB-0007-16

OPEN DATE: 2015-10-21

COMPETITIVE SEALED PROPOSAL EVALUATION COMMITTEE

KIND AND BASIS OF CONTRACT: CONSTRUCTION- DESIGN/BUILD

AGENCY: PUBLIC WORKS

BASIS OF AWARD: QUALIFICATIONS BASED

NUMBER OF BIDS INVITED: 4 NUMBER RECEIVED: 9 OTHER: 1

SUMMARY OF BIDS AND RECOMMENDED ACTIONS:
The Fire Station #4 Addition project was awarded to Auld & White Constructors, LLC, on May 6, 2021 for Contract 9182-03 in the amount of $749,600.00

Recommend approval of Amendment 12B to Auld & White Constructors, LLC, in the amount of $323,665.00 for additional scope items required to complete the project with an additional 73 day on site construction duration. Revised guaranteed maximum price not-to-exceed amount will be $1,073,265.00. Total contracted amount is currently at $33,000,000.00, total amount spent to date is $21,621,021.14.

This amendment is to be funded by account 004308.565051.1.32111.384020 and to be executed by contract amendment through Office of General Counsel.

ATTACHMENTS: Recommendation Memo, Exhibit N-2, Previous Awards

ANALYST: BRYAN MATUS

RESPECTFULLY SUBMITTED: GREGORY PEASE, CHIEF PROCUREMENT DIVISION

CONCURRENCE BY: Robin G. Smith, P.E., Chief, Engineering and Construction Management

(ALL AWARD ACTIONS SUBJECT TO LAWFULLY APPROPRIATED FUNDS)
ACTION OF CSPEC COMMITTEE ON RECOMMENDATIONS ABOVE

MEMBERS APPROVING 5 MEMBERS DISAPPROVING 0 DATE: 10/28/2021

OTHER

ACTION OF AWARDING AUTHORITY

DATE 11-1-21

APPROVED ✓ DISAPPROVED

OTHER

SIGNATURE OF AUTHENTICATION

Brian Hughes
Chief Administrative Officer
For Mayor Lenny Curry
Under Authority of
Executive Order No. 2019-02

SUBJECT: RFQ FOR DESIGN-BUILD SVCS FOR VERTICAL/ARCHITECTURAL PROJECTS
BID # CDB-0007-16

OPEN DATE. 10/21/2015

COMPETITIVE SEALED PROPOSAL EVALUATION COMMITTEE

KIND AND BASIS OF CONTRACT: CONSTRUCTION – DESIGN/BUILD

AGENCY DEPARTMENT OF PUBLIC WORKS

BASIS OF AWARD: QUALIFICATIONS BASED

NUMBER OF BIDS INVITED: NUMBER RECEIVED : OTHER :

SUMMARY OF BIDS AND RECOMMENDED ACTIONS:
Recommend approval to amend Contract 9182-03 with Auld & White Constructors LLC to extend the expiration from July 13, 2021 thru January 12, 2022 and to increase the upset limit by $3,000,000.00 to a new limit of $33,000,000.00. This will allow continued Design Build services that are needed until the replacement contract is executed

Attachments: Recommendation Memo, Previous Award(s)

BUYER Nekole Hulitt
NEKOLE HULITT

RESPECTFULLY SUBMITTED
GREGORY PEASE, CHIEF
PROCUREMENT DIVISION

CONCURRENCE BY: Robin G. Smith, P.E., Chief, Engineering and Construction Management

(ALL AWARD ACTIONS SUBJECT TO LAWFULLY APPROPRIATED FUNDS)
ACTION OF CSPEC COMMITTEE ON RECOMMENDATIONS ABOVE

MEMBERS APPROVING 5 MEMBERS DISAPPROVING 0 DATE 6/3/2021

OTHER

ACTION OF AWARDING AUTHORITY

APPROVED ✓ DATE 6/4/21

DISAPPROVED.

OTHER:

SIGNATURE OF AUTHENTICATION

SUBJECT: RFQ FOR DESIGN-BUILD SVCS FOR VERTICAL/ARCHITECTURAL PROJECTS
BID # CDB-0007-16

OPEN DATE 10/21/2015

COMPETITIVE SEALED PROPOSAL EVALUATION COMMITTEE

KIND AND BASIS OF CONTRACT: CONSTRUCTION – DESIGN/BUILD

AGENCY: DEPARTMENT OF PUBLIC WORKS

BASIS OF AWARD: QUALIFICATIONS BASED

NUMBER OF BIDS INVITED: : NUMBER RECEIVED: : OTHER :

SUMMARY OF BIDS AND RECOMMENDED ACTIONS:
The Department of Public Works has completed negotiations with Auld & White Constructors, LLC for Fire Station #74 in accordance with subject bid.

Recommend approval of award to Auld & White Constructors, LLC, for design, permitting and construction services for Fire Station #74 in the guaranteed maximum price of $4,100,000.00. This incorporates Scope & Fee Summary, "Exhibit O-1" and with design completion in 260 days for on-site construction from the Notice to Proceed and permitting Total annual expenditure amount is currently at $32,000,000.00; total amount spent to date is $17,549,036.43.

Funding for this project to be executed by Amendment 13A for contract # 9182-03 and encumbered by account(s) 010102.565051.1.32111.384020

Attachments: Recommendation Memo, Exhibit "O-1", Previous Award(s)

BUYER Nekole Hulitt
NEKOLE HULITT

RESPECTFULLY SUBMITTED
GREGORY PEASE, CHIEF
PROCUREMENT DIVISION

CONCURRENCE BY: Robin G. Smith, P.E., Chief, Engineering and Construction Management Division & Keith Powers, Director, Jacksonville Fire & Rescue

(ALL AWARD ACTIONS SUBJECT TO LAWFULLY APPROPRIATED FUNDS)
ACTION OF CSPEC COMMITTEE ON RECOMMENDATIONS ABOVE

MEMBERS APPROVING 5 MEMBERS DISAPPROVING 0 DATE: 5/27/2021

OTHER

ACTION OF AWARDING AUTHORITY

DATE 6/1/21

APPROVED ✓ DISAPPROVED:

OTHER:

SIGNATURE OF AUTHENTICATION

SUBJECT: RFQ FOR DESIGN-BUILD SVCS FOR VERTICAL/ARCHITECTURAL PROJECTS
BID # CDB-0007-16

OPEN DATE: 10/21/2015

COMPETITIVE SEALED PROPOSAL EVALUATION COMMITTEE

KIND AND BASIS OF CONTRACT:
CONSTRUCTION – DESIGN/BUILD

AGENCY: DEPARTMENT OF PUBLIC WORKS

BASIS OF AWARD: QUALIFICATIONS BASED

NUMBER OF BIDS INVITED: : NUMBER RECEIVED: : OTHER: :

SUMMARY OF BIDS AND RECOMMENDED ACTIONS:
The Department of Public Works has completed negotiations with Auld & White Constructors, LLC, for Fire Station #4 Addition in accordance with subject bid.

Recommend approval of award to Auld & White Constructors, LLC, for design, permitting and construction services for the Fire Station #4 Addition in the guaranteed maximum price of $749,600.00. This incorporates Scope & Fee Summary, "Exhibit N-1" and with design completion in 70 days, permitting in 60 days and 90 days for construction for a total of 220 days from the Notice to Proceed. Total annual expenditure amount is currently at $32,000,000.00, total amount spent to date is $13,449,036.43.

Funding for this project to be executed by Amendment 12A for contract # 9102-03 and encumbered by account(s): 004300.565051.1.32111.384020

Attachments: Recommendation Memo, Exhibit "N-1", Previous Award(s)

BUYER Nekole Hulitt
NEKOLE HULITT

RESPECTFULLY SUBMITTED
GREGORY PEASE, CHIEF
PROCUREMENT DIVISION

CONCURRENCE BY: Robin G. Smith, P.E., Chief, Engineering and Construction Management Division & Keith Powers, Director, Jacksonville Fire & Rescue

(ALL AWARD ACTIONS SUBJECT TO LAWFULLY APPROPRIATED FUNDS)
ACTION OF CSPEC COMMITTEE ON RECOMMENDATIONS ABOVE

MEMBERS APPROVING 5 MEMBERS DISAPPROVING 0 DATE: 5/6/2021

OTHER

ACTION OF AWARDING AUTHORITY

DATE 5/6/21

APPROVED ✓ BH DISAPPROVED:

OTHER:

SIGNATURE OF AUTHENTICATION

SUBJECT: RFQ FOR D/B SVCS OF VERTICAL/ARCHITECTURAL PROJECTS

BID # CDB-0007-16

OPEN DATE: 10/21/2015

COMPETITIVE SEALED PROPOSAL EVALUATION COMMITTEE

KIND AND BASIS OF CONTRACT:
CONSTRUCTION – DESIGN/BUILD

AGENCY: DEPARTMENT OF PUBLIC WORKS

BASIS OF AWARD: EVALUATION CRITERIA

NUMBER OF BIDS INVITED: 4 NUMBER RECEIVED: 9 OTHER: 1

SUMMARY OF BIDS AND RECOMMENDED ACTIONS:

The City had previously issued this RFP, and the evaluation committee has evaluated proposals. Subsequently, presentations were conducted and evaluated on February 4, 2016; 02/11/16 Auld & White Constructors, LLC was awarded as highest ranking firm with funding not-to-exceed $6,000,000.00 annually for a period of service for five (5) years

Recommend approval of award to include the rate sheets as part of Exhibit A, as they were omitted from original award. No additional changes are needed.

Attachments: Recommendation Memo, Previous Award (s)

BUYER Marilyn Laidler
MARILYN LAIDLER

RESPECTFULLY SUBMITTED
GREGORY PEASE, CHIEF
PROCUREMENT DIVISION

CONCURRENCE BY: Thomas N. Faillin, P.E., Chief, Engineering & Construction Management Division

(ALL AWARD ACTIONS SUBJECT TO LAWFULLY APPROPRIATED FUNDS)
ACTION OF CSPEC COMMITTEE ON RECOMMENDATIONS ABOVE

MEMBERS APPROVING 5

MEMBERS DISAPPROVING

DATE: 6-16-16

OTHER

ACTION OF AWARDING AUTHORITY

MK APPROVED ✓

DISAPPROVED:

DATE 6/16/16

OTHER:

Samuel Moorer
Chief Administrative Officer
for Mayor Lenny Curry
Under Authority of
Executive Order No. 2015-05

SIGNATURE OF AUTHENTICATION

SUBJECT: RFQ FOR D/B SVCS OF VERTICAL/ARCHITECTURAL PROJECTS

BID # CDB-0007-16

OPEN DATE: 10/21/2015

COMPETITIVE SEALED PROPOSAL EVALUATION COMMITTEE

KIND AND BASIS OF CONTRACT:
CONSTRUCTION – DESIGN/BUILD

AGENCY: DEPARTMENT OF PUBLIC WORKS

BASIS OF AWARD: EVALUATION CRITERIA

NUMBER OF BIDS INVITED: 4 NUMBER RECEIVED: 3 OTHER: 1

SUMMARY OF BIDS AND RECOMMENDED ACTIONS:

The City had previously issued this RFP, and the evaluation committee has evaluated proposals. Subsequently, presentations were conducted and evaluated on February 4, 2015. Based upon the combination of proposal and presentation evaluations scores and rankings are as follows (Listed in alphabetical order):

1) Auld & White Constructors, LLC (Score 116)
3) Saur, Inc. (Score 115)
2) Stellar Group, Inc. (Score 115.5)

Recommend approval of award to Auld & White Constructors, LLC, as receiving the highest score in accordance with the evaluation and ranking above. Period of Service will be five (5) years from effective date of contract with funding not-to-exceed $6,000,000.00 annually. To be executed by formal contract through Office of General Counsel.

Attachments, Recommendation Memo, Scoring Matrix, Previous Award

BUYER _____
For - MARILYN LAIDLER
SDO

RESPECTFULLY SUBMITTED _____
GREGORY PEASE, CHIEF
PROCUREMENT DIVISION

CONCURRENCE BY: Thomas N. Faillo, P.E., Acting Chief-Engineering & Construction Management Division

(ALL AWARD ACTIONS SUBJECT TO LAWFULLY APPROPRIATED FUNDS)
ACTION OF CSPEC COMMITTEE ON RECOMMENDATIONS ABOVE

MEMBERS APPROVING 5

MEMBERS DISAPPROVING _____ DATE 2/11/16

OTHER _____

ACTION OF AWARDING AUTHORITY

APPROVED ✓ DISAPPROVED _____ DATE 2/11/16

OTHER: _____

SIGNATURE OF AUTHENTICATION _____

SUBJECT: RFQ- FOR DESIGN-BUILD SERVICES OF VERTICAL/ARCHITECTURAL PROJECTS
BID # COB-0007-16

OPEN DATE: 10/21/2015

COMPETITIVE SEALED PROPOSAL EVALUATION COMMITTEE

KIND AND BASIS OF CONTRACT
CONSTRUCTION – DESIGN/BUILD

AGENCY DEPARTMENT OF PUBLIC WORKS

BASIS OF AWARD: EVALUATION CRITERIA

NUMBER OF BIDS INVITED: 4 NUMBER RECEIVED 5 OTHER 1

SUMMARY OF BIDS AND RECOMMENDED ACTIONS:
The City had previously issued this RFP, and the evaluation committee has evaluated proposals. Based upon the proposal evaluation, the average scores and rankings are as follows and two with the scores (Listed in alphabetical order)

1) Auld & White Constructors, LLC (Score 87.5)
2) Sauer, Inc. (Score 87.5)
3) Stellar Group, Inc. (Score 86.5)

Pursuant to Section 2.6 – Award of Contract of the RFP recommend approval to conduct formal interviews with each of the three-top ranked Firms.

Attachments: Recommendation Memo Scoring Matrix Bid Tabulation Section 2.6, JSEB Letter

BUYER
for MARILYN LAIDLER

RESPECTFULLY SUBMITTED
GREGORY PEASE, CHIEF
PROCUREMENT DIVISION

CONCURRENCE BY William J. Joyce, P.E., Chief-Engineering & Construction Management

(ALL AWARD ACTIONS SUBJECT TO LAWFULLY APPROPRIATED FUNDS)
ACTION OF CSPEC COMMITTEE ON RECOMMENDATIONS ABOVE

MEMBERS APPROVING 5

MEMBERS DISAPPROVING

DATE 1-14-16

OTHER

ACTION OF AWARDING AUTHORITY

APPROVED ✓

DISAPPROVED

DATE 1/14/16

OTHER:

SIGNATURE OF AUTHENTICATION

Santé Moore
Chief Administrative Officer
For the Mayor, Emil
Under Authority of
Executive Order No. 2015-1