SUBJECT: RFQ-DESIGN-BUILD SERVICES FOR MARINE PROJECTS- ANNUAL CONTRACTS

BID # CDB-0153-19 **OPEN DATE: 2019-05-15**

COMPETITIVE SEALED PROPOSAL EVALUATION COMMITTEE

KIND AND BASIS OF CONTRACT: CONSTRUCTION – DESIGN/BUILD- REQUEST FOR QUALIFICATIONS

AGENCY: PUBLIC WORKS

BASIS OF AWARD: EVALUATION CRITERIA

NUMBER OF BIDS INVITED: 7 **NUMBER RECEIVED: 3** **OTHER: 1**

SUMMARY OF BIDS AND RECOMMENDED ACTIONS:

Recommend approval to amend the award with Hal Jones Contractor, a division of Vecellio & Grogan, Inc. (Contract # 9952-05), to incorporate the Scope and Fee Summary, Exhibit I-1, known as Amendment 8A, to provide design, permitting, and installation of the Ortega River Signage in the amount $80,011.65. Total maximum indebtedness is $24,000,000.00.

Funding for this award to be encumbered by 11543.165101.549026.000000.00000000.00000.0000000 and executed by formal contract amendment through Office of General Counsel.

ATTACHMENTS: Recommendation Memo, Scope and Fee Schedule, Previous Awards

ANALYST: _____ Jaclyn Stamos

RESPECTFULLYSUBMITTED: _____ DUSTIN FREEMAN, CHIEF PROCUREMENT DIVISION

CONCURRENCE BY: **Robin G. Smith, P.E., Chief, Engineering and Construction Mgmt.**

(ALL AWARD ACTIONS SUBJECT TO LAWFULLY APPROPRIATED FUNDS)

ACTION OF CSPEC COMMITTEE ON RECOMMENDATIONS ABOVE

MEMBERS APPROVING_____ MEMBERS DISAPPROVING_____ DATE:_____

_____ _____ OTHER_____

_____ _____

_____ _____

_____ _____

_____ _____

ACTION OF AWARDING AUTHORITY DATE _____

APPROVED_____ DISAPPROVED: _____

OTHER: _____

SIGNATURE OF AUTHENTICATION _____

City of Jacksonville, Florida

Lenny Curry, Mayor

Department of Public Works
Engineering & Construction Management Division
214 N. Hogan Street, 10th Floor
Jacksonville, FL 32202
(904) 255-8762
www.coj.net

ONE CITY ONE JACKSONVILLE

November 17, 2022

TO: Dustin Freeman
Chief of Procurement

THRU: Steven D Long, Jr., P. E.
Director

FROM: Robin G. Smith, P. E.
Chief, Engineering and Construction Management

Daryl T. Joseph
Director, Parks, Recreation and Community Services

SUBJECT: CDB-0153-19 – Design-Build Services for Marine Projects- Annual Contracts
Ortega River Signage Amendment 8A

Based on the Design Criteria Package developed by City engineers, the Department of Public Works, in accordance with Design/Build CDB-0153-19 has completed negotiations with Hal Jones Contractor, a Division of Vecellio & Grogan, Inc. to provide design, permitting and installation of the Ortega River Signage. Negotiations have resulted in the GMP amount of $80,011.65 as indicated on the attached Scope and Fee Summary Exhibit I-1 and allows for completion 120 days from the Notice to Proceed. JSEB firms to be utilized to meet the 10% Participation Percentage Plan for this contract are detailed on a separate attachment.

Accordingly, this is to recommend that the Contract # 9952-05, originally executed December 9, 2019, between the City and Hal Jones Contractor, a Division of Vecellio & Grogan, Inc. for Design-Build Services for Marine Projects-Annual Contracts, be amended to incorporate the attached Scope and Fee Summary, Exhibit I-1 for the Ortega River Signage for the GMP amount of $80,011.65, known as Amendment 8A.

Funding for this project should be encumbered as follows:

ACCOUNTS:	TOTAL
11543.165101.549026.000000.00000000.00000.0000000	
	$80,011.65

RGS/rc

Attachment: Exhibit I-1
JSEB Participation

cc: Lori West, Public Works Contract Specialist
Richard A Cooper Public Works Contract Specialist

EXHIBIT I-1

HAL JONES CONTRACTOR
A Division of Vecellio & Grogan, Inc.

CGC1527871

HAL JONES CONTRACTOR
A DIVISION OF VECELLIO & GROGAN, INC.

720 Talleyrand Avenue
Jacksonville, FL 32202
P.O. Box 3257 Jacksonville, FL 32206

Greg Bedenbaugh
Division President

Phone 904-355-5885
Facsimile 904-355-7648
website vecelliogrogan.com

July 18, 2022

Mr. Brian Burket
City of Jacksonville | Parks, Recreation and Community Services
214 N. Hogan Street, 4th Floor
Jacksonville Fl, 32202

Re: Ortega River Signage Proposal

Dear Brian:

Hal Jones Contractor (HJC) is pleased to offer our proposal for the design and installation of Anchor Limitation Area Signage in Ortega River. Please see details below and attached pricing.

The scope of this work is for the development / installation of the following items:

- Design Plans
- Design Specifications
- Surveys, soil sampling, and site investigations
- Permit applications
- Installation of signage shown in the attached preliminary plans

Thank you for the opportunity to offer this proposal. If you have any questions or concerns, please do not hesitate to contact me.

Sincerely,

HAL JONES CONTRACTOR
A DIVIISON OF VECELLIO & GROGAN, INC.

Greg Tolbert
Project Manager

EXHIBIT I-1

HAL JONES CONTRACTOR
A Division of Vecellio & Grogan, Inc.

DESIGN BUILD MARINE CONTRACT

ORTEGA RIVER - ANCHOR LIMITATION AREA SIGNAGE

DESCRIPTION	UNIT	QUANTITY	UNIT COST	TOTAL COST
Project Management	HRS	14	$ 85.00	$ 1,190.00
Design Development Proposal	LS	1	$ 18,274.11	$ 18,274.11
Installation of Signage	LS	1	$ 53,273.75	$ 53,273.75
				$ -
DB Fee 10%				$ 7,273.79
			TOTAL:	$ 80,011.65

EXHIBIT I-1

DESIGN PROPOSAL

FOR

Anchoring Limitation Area Signage

PREPARED BY:

HAL JONES CONTRACTOR

A DIVISION OF VECELLIO GROGAN INC.

&

MORALES CONSULTING ENGINEERS, INC.

July 2022

ANCHORAGE LIMITATION AREA SIGNAGE

DESIGN PROPOSAL

DATE: June 2022

GENERAL

This proposal is for the design and development of signage plan to comply with City Ordinance 2022-61-E for the Anchorage limitation Areas Along Ortega River.

Anchorage Limitation Area Signage, Design Development Proposal

ITEMS PROVIDED

a. Copy of City Ordinance 2022-61-E

STILL REQUIRE

a. Utility information concerning the location of existing utilities, pipelines, and structures of every type which may interfere with the sign locations.
b. Survey of proposed sign and buoy locations
c. Report of Geotechnical Exploration.
d. Bathometry

SCOPE OF WORK

GENERAL

Preliminary development of the design, permitting, and construction cost estimate for the Anchorage Limitation Area Signage

PRELIMINARY DESIGN AND PERMITTING

a. Prepare plans and specifications for the Sign Program
b. Surveys, soil sampling, and site investigations will be necessary to develop the design and specifications for the Project.
c. Submit applications for all permits necessary to complete the work. Including cost required application fees, and associated permit fees. Permits and approvals are anticipated from St. Johns River Water Management District, Florida Department of Environmental Protection, U.S. Army Corps of Engineers, Florida Wildlife Commission, US Coast Guard and Railroad.
d. A sets Preliminary Plans, specifications, and engineering calculations.

APPENDIX A

FEE PROPOSAL

PART I - GENERAL	
1. Project: Anchorage Limitation Area	2. Project Number
3. Name of Consultant Morales Consulting Engineers, Inc.	4. Date 5/6/2022

PART II - LABOR RELATED COSTS

5. Labor @ Contract Rates	Hourly Rate	Estimated Hours	Estimated Cost	TOTAL
Project Manager	$ 90.00	8	$ 720.00	
Design Engineer	$ 90.00	70	$ 6,300.00	
Senior Engineering Tech	$ 35.00	0	$ 0.00	
Technician/CADD	$ 35.00	0	$ 0.00	
Clerical	$ -	0	$ 0.00	
TOTAL DIRECT LABOR	$ 90.00	78		$ 7,020.00
6. Overhead (Combined Fringe Benefit & Administrative)				
Overhead Rate	136.65 % x Total Direct Labor			$ 9,592.83
7. SUBTOTAL: Labor + Overhead				$ 16,612.83
8. PROFIT: Labor Related Costs (Item 7)		x	10.00%	$ 1,661.28

PART III - OTHER COSTS

9. Miscellaneous Direct Costs		
Transportation	$ 0.00	
Original Reproducibles	$ 0.00	
Reproduction	$ 0.00	
Shipping	$ 0.00	
Other	$ 0.00	
MISCELLANEOUS DIRECT COSTS SUB-TOTAL		$ -
10. SUBCONTRACTS (Lump Sum)		
	$ 0.00	
	0.00	
SUBCONTRACT SUB-TOTAL		$ -
TOTAL AMOUNT (Items 5, 6, 8, 9 and 10)		$ -
11. REIMBURSABLE COSTS (Limiting Amount)		
	$ 0.00	
	$ 0.00	
	$ 0.00	
	$ 0.00	
SUBTOTAL REIMBURSABLES		$ -

PART IV - SUMMARY

TOTAL AMOUNT OF CONTRACT (Items 5, 6, 8, 9, 10 and 11)	$ **18,274.11**

MORALES CONSULTING ENGINEERS

PRELIMINARY NOT FOR CONSTRUCTION

PROJECT:

ANCHORAGE LIMITATION AREA SIGNAGE

JACKSONVILLE, FLORIDA

CITY OF JACKSONVILLE

214 NORTH HOGAN ST.
JACKSONVILLE, FL 32202

NO.	DATE	BY	APPROVED

DESIGNED BY:
DRAWN BY:
CHECKED BY:
APPROVED BY:
DATE

SHEET TITLE:

ANCHORAGE LIMITATION AREA

SHEET NUMBER: S-1

SHEET OF XX SHEETS

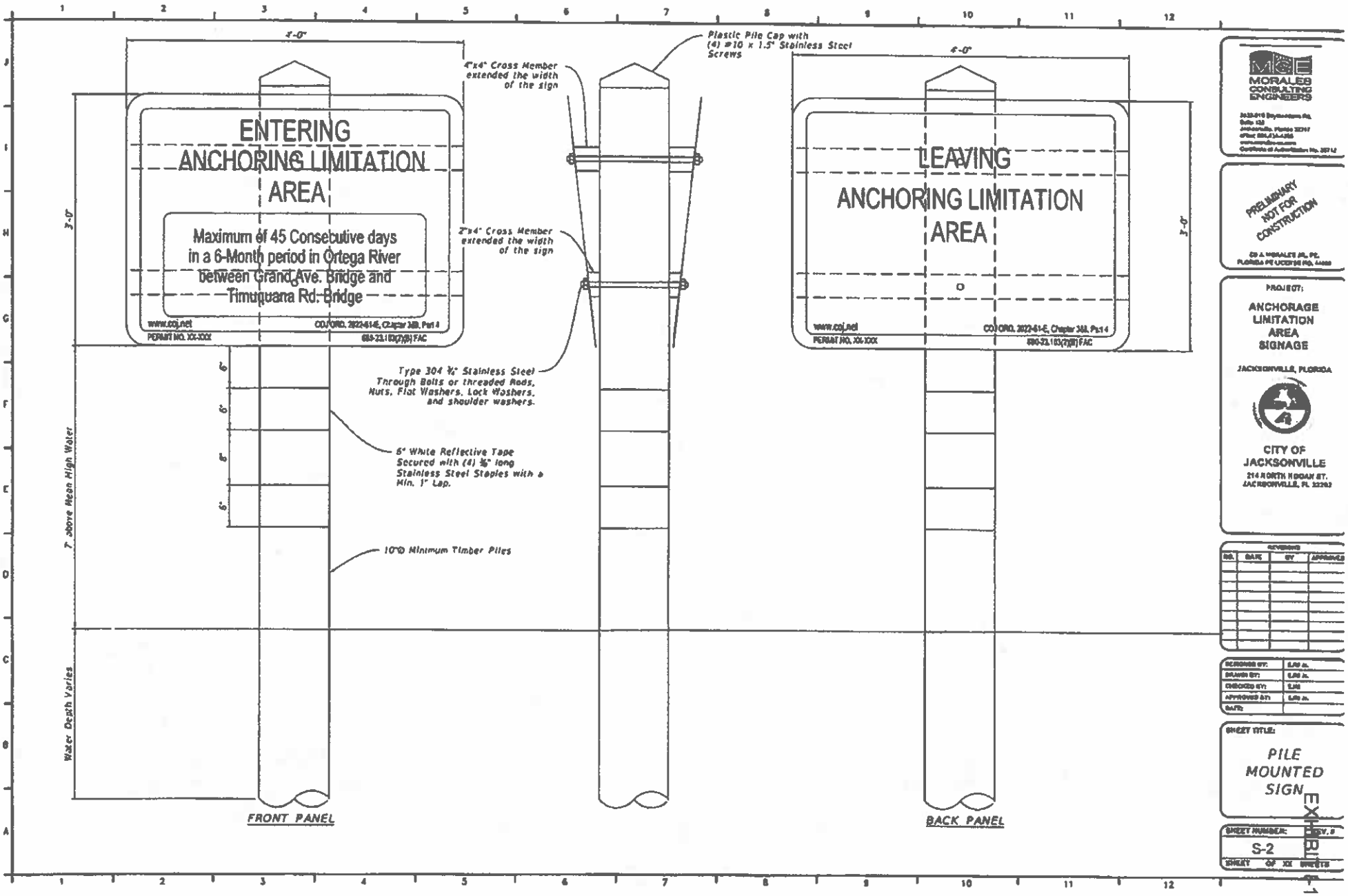
4'-0"
ENTERING
ANCHORING LIMITATION
AREA
Maximum of 45 Consecutive days
in a 6-Month period in Ortega River
between Grand Ave. Bridge and
Timuquana Rd. Bridge
www.coj.net
COJ ORD. 2022-61-E, Chapter 368, Part 4
PERMIT NO. XX-XXX
69-23.1 (3)(7)(8) FAC
3'-0"
6"
6"
6"
6"
7' above Mean High Water
Water Depth Varies
4"x4" Cross Member extended the width of the sign
2"x4" Cross Member extended the width of the sign
Plastic Pile Cap with (4) #10 x 1.5" Stainless Steel Screws
Type 304 ¾" Stainless Steel Through Bolts or threaded Rods, Nuts, Flat Washers, Lock Washers, and shoulder washers.
6" White Reflective Tape Secured with (4) ½" long Stainless Steel Staples with a Min. 1" Lap.
10"Ø Minimum Timber Piles
FRONT PANEL
4'-0"
LEAVING
ANCHORING LIMITATION
AREA
www.coj.net
COJ ORD. 2022-61-E, Chapter 368, Pt.14
PERMIT NO. XX-XXX
69-23.1 (3)(7)(8) FAC
3'-0"
BACK PANEL
MORALES CONSULTING ENGINEERS
PRELIMINARY NOT FOR CONSTRUCTION
PROJECT:
ANCHORAGE LIMITATION AREA SIGNAGE
JACKSONVILLE, FLORIDA
CITY OF JACKSONVILLE
214 NORTH HOGAN ST.
JACKSONVILLE, FL 32202
REVISIONS
NO. DATE BY APPROVED
DESIGNED BY:
DRAWN BY:
CHECKED BY:
APPROVED BY:
DATE:
SHEET TITLE:
PILE MOUNTED SIGN
SHEET NUMBER:
REV. #
S-2
SHEET OF XX SHEETS

EXHIBIT 1

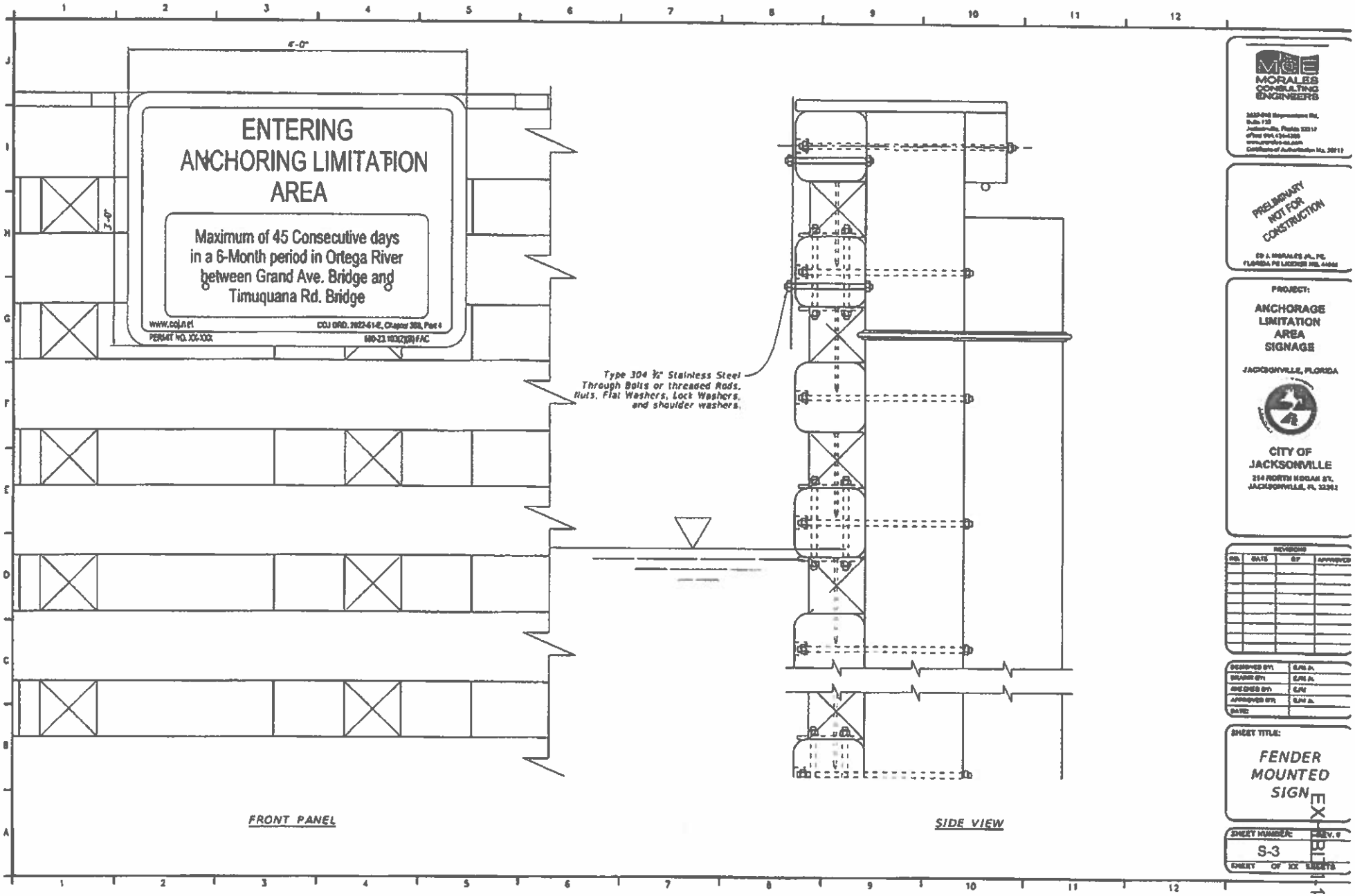
4'-0"
3'-0"
ENTERING
ANCHORING LIMITATION
AREA
Maximum of 45 Consecutive days
in a 6-Month period in Ortega River
between Grand Ave. Bridge and
Timuquana Rd. Bridge
www.coj.net
PERMIT NO. XX-XXX
Type 304 ¾" Stainless Steel
Through Bolts or threaded Rods,
Nuts, Flat Washers, Lock Washers,
and shoulder washers.
FRONT PANEL
SIDE VIEW
MORALES
CONSULTING
ENGINEERS
PRELIMINARY
NOT FOR
CONSTRUCTION
PROJECT:
ANCHORAGE
LIMITATION
AREA
SIGNAGE
JACKSONVILLE, FLORIDA
CITY OF
JACKSONVILLE
REVISIONS
SHEET TITLE:
FENDER
MOUNTED
SIGN
EXHIBIT 1
SHEET NUMBER:
S-3
SHEET OF XX SHEETS

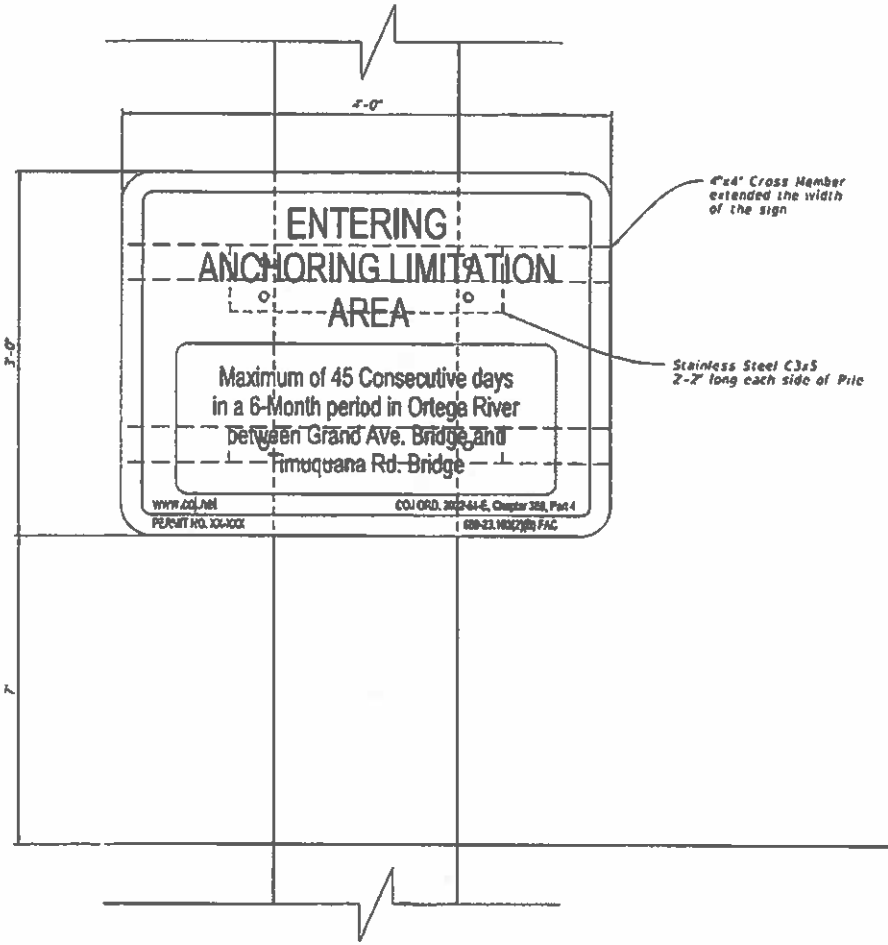

FRONT PANEL

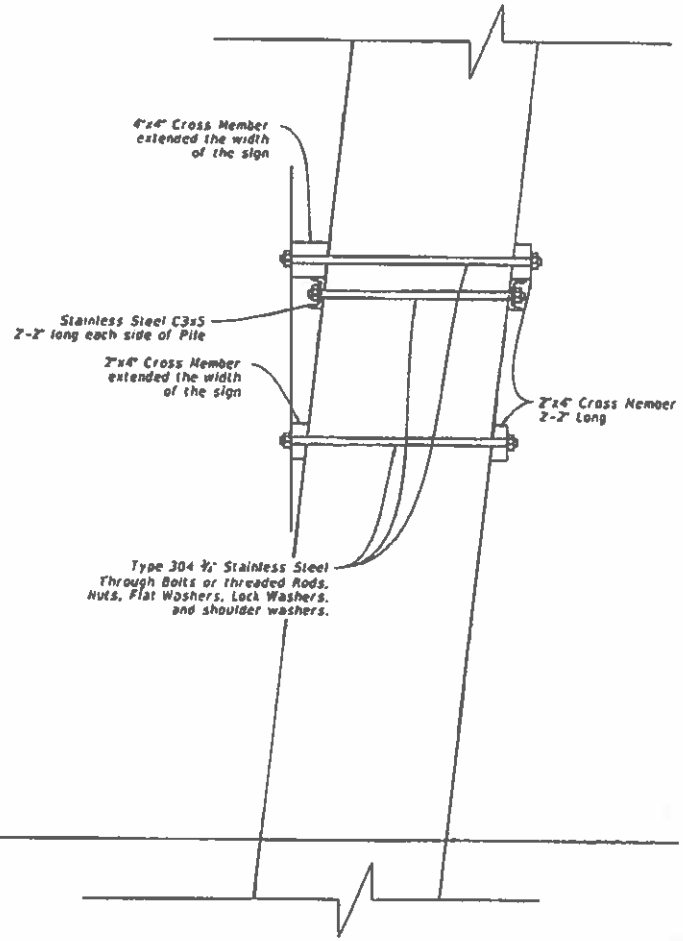

SIDE VIEW

MORALES CONSULTING ENGINEERS

PRELIMINARY NOT FOR CONSTRUCTION

PROJECT:

ANCHORAGE LIMITATION AREA SIGNAGE

JACKSONVILLE, FLORIDA

CITY OF JACKSONVILLE

214 NORTH HOGAN ST.
JACKSONVILLE, FL 32202

NO.	DATE	BY	APPROVED

DESIGNED BY: EJM Jr.
DRAWN BY: EJM Jr.
CHECKED BY: EJM
APPROVED BY: EJM Jr.
DATE:

SHEET TITLE:

BRIDGE MOUNTED SIGN

SHEET NUMBER: S-4 REV. 0

SHEET OF XX SHEETS

EXHIBIT 1

EBO FORM 1
SCHEDULE OF SUBCONTRACTOR/SUBCONSULTANT PARTICIPATION

Name of Proposer: .Hal Jones Contractor, a Division of Vecellio & Grogan, Inc

Project Title: Ortega River – Anchor Limitation Area Signage

Proposal Number: _____ Total Base Proposal Amount (if applicable): $80,011.65

***Please list all JSEBs first**

Full Company Name	JSEB Category (African-American, Women, Asian, Native American, Non-MBE or Hispanic)	Type of Work to be Performed	Total Contract Value or Percentage
Morales Consulting Engineers	Hispanic	Engineering / Design	$18,274.11

Attach additional list of subcontractors/sub-consultants as needed

CONSULTANT/SUBCONTRACTOR/SUPPLIER TOTAL VALUES	
African-American Participation Total	$
Hispanic-American Participation Total	
Native-American Participation Total	
Asian-American Participation Total	
Woman Participation Total	
Non-MBE Participation Total	$

The undersigned will enter into a formal Agreement with the JSEB Suppliers/Consultants/Subcontractors identified herein for work listed in this schedule conditioned upon execution of a contract with the City of Jacksonville. Under penalties of perjury I declare that I have read the foregoing conditions and instructions and the facts are true to the best of my knowledge and beliefs.

Signature of Proposer: _____ Title: _____ Date: _____

Print Name: _____

SUBJECT: RFQ-DESIGN-BUILD SERVICES FOR MARINE PROJECTS- ANNUAL CONTRACTS

BID # CDB-0153-19

OPEN DATE: 2019-05-15

COMPETITIVE SEALED PROPOSAL EVALUATION COMMITTEE

KIND AND BASIS OF CONTRACT: CONSTRUCTION – DESIGN/BUILD- REQUEST FOR QUALIFICATIONS

AGENCY: PUBLIC WORKS

BASIS OF AWARD: EVALUATION CRITERIA

NUMBER OF BIDS INVITED: 7 NUMBER RECEIVED: 3 OTHER: 1

SUMMARY OF BIDS AND RECOMMENDED ACTIONS:

Recommended approval to utilize the first renewal option with Hal Jones Contractor, a division of Vecellio & Grogan, Inc Period of Service will be from December 10, 2021 through December 9 2023 with one (1) two (2) year renewal option remaining The annual expenditure amount for the renewal period will be $6 000,000.00 per year for a total revised award amount no-to-exceed $24,000,000 00

To be executed by formal contract amendment through Office of General Counsel

ATTACHMENTS: Recommendation Memo, Vendor Letters, Previous Award(s)

ANALYST: BRYAN MATUS

RESPECTFULLY SUBMITTED: GREGORY PEASE, CHIEF PROCUREMENT DIVISION

CONCURRENCE BY: Robin G. Smith, P.E., Chief, Engineering and Construction Mgmt.

(ALL AWARD ACTIONS SUBJECT TO LAWFULLY APPROPRIATED FUNDS)

ACTION OF CSPEC COMMITTEE ON RECOMMENDATIONS ABOVE

MEMBERS APPROVING 5 MEMBERS DISAPPROVING 0 DATE 9/23/21

OTHER

ACTION OF AWARDING AUTHORITY DATE 9-24-21

APPROVED ✓ DISAPPROVED:

OTHER:

SIGNATURE OF AUTHENTICATION

Brian Hughes
Chief Administrative Officer
For Mayor Lenny Curry
Under Authority of:
Executive Order No: 2019-02

SUBJECT: RFQ-DESIGN-BUILD SERVICES FOR MARINE PROJECTS- ANNUAL CONTRACTS

BID # CDB-0153-19

OPEN DATE: 05/15/2019

COMPETITIVE SEALED PROPOSAL EVALUATION COMMITTEE

KIND AND BASIS OF CONTRACT:
CONSTRUCTION – DESIGN/BUILD- REQUEST FOR QUALIFICATIONS

AGENCY: DEPARTMENT OF PUBLIC WORKS

BASIS OF AWARD: EVALUATION CRITERIA

NUMBER OF BIDS INVITED: 7 NUMBER RECEIVED: 3 OTHER: 1

SUMMARY OF BIDS AND RECOMMENDED ACTIONS:
Subject bid was previously shortlisted for three firms and approved on 06/20/19, Interviews were held for the three shortlisted firms based on the final average scores, the following firms are listed alphabetically. The ranking of first, second and third designates the order of qualification of these firms to perform the required services:

3) Baker Construction Services, LLC. – 91.50
1) Hal Jones Contractor, LLC a division of Vecellio & Grogan, Inc. – 112.75
2) Superior Construction Co. SE, LLC- 104.00

Pursuant to Section 2.6 – Award of Contract of the RFP, recommend approval of award for final list to begin negotiations with number one ranked firm Hal Jones Contractor, LLC a division of Vecellio & Grogan, Inc.

Attachments: Recommendation Memo, Scoring Matrix, Section 2.6, Previous Award

BUYER Marilyn Laidler
MARILYN LAIDLER

RESPECTFULLY SUBMITTED Greg Pease
GREGORY PEASE, CHIEF PROCUREMENT DIVISION

CONCURRENCE BY: John Pappas, P.E., Director, Public Works Department

(ALL AWARD ACTIONS SUBJECT TO LAWFULLY APPROPRIATED FUNDS)
ACTION OF CSPEC COMMITTEE ON RECOMMENDATIONS ABOVE

MEMBERS APPROVING 5 MEMBERS D SAPPROVING DATE: 8/01/19

OTHER

ACTION OF AWARDING AUTHORITY DATE 8/2/19

APPROVED ✓ SAP ROV D

OTHER:

SIGNATURE OF AUTHENTICATION

Brian Hughes
Chief Administrative Officer
For: Mayor Lenny Curry
Under Authority of:
Executive Order No. 2019-02